April 20, 1937. G. R. GOBER 2,077,686

TERMINAL BUSHING

Filed Nov. 30, 1935

FIG. 1

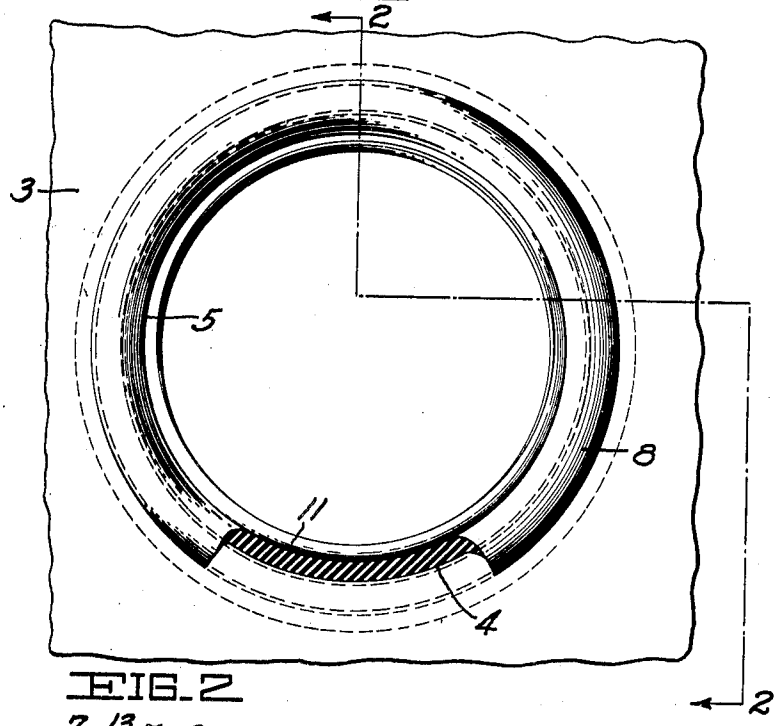

FIG. 2

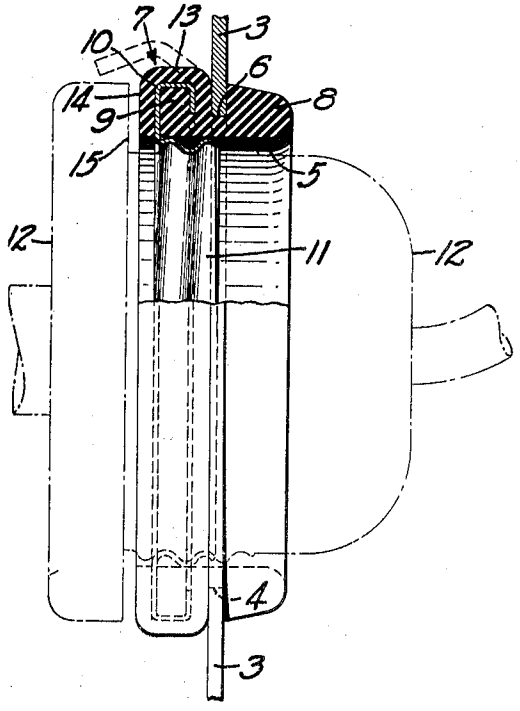

INVENTOR
George R. Gober
BY
Harry C. Schroeder
ATTORNEY

Patented Apr. 20, 1937 2,077,686

UNITED STATES PATENT OFFICE

2,077,686

TERMINAL BUSHING

George R. Gober, Alameda, Calif.

Application November 30, 1935, Serial No. 52,378

2 Claims. (Cl. 173—311)

This invention relates to means for mounting devices, such as electric terminals or lamps, in surfaces, such as electrical display signs.

It is an object of the invention to provide a unitary device of the character described which may be instantly attached or detached.

Another object of the invention is to provide a receptacle supporter which when an object is mounted therein, will prevent the entrance of moisture past the receptacle.

Still another object of the invention is to provide a supporter, for a receptacle mountable in apertures in a plate having an enamelled surface, which will not chip or check the enamel of said surface.

A further object of the invention is to provide a supporter, for a receptacle mountable in an aperture in a plate, which will accommodate itself to variations in size and shape of said aperture.

The invention possesses other objects, and valuable features, some of which, together with the foregoing, will be specifically set forth in the specification hereunto annexed. It is to be understood that the invention is not to be limited to that form thereof shown and described as various other embodiments thereof may be employed within the scope of the appended claims.

Referring to the drawing:

Figure 1 is a rear elevational view, of the receptacle and the supporter therefor, mounted in a section of sheet material. A portion of the view is broken away and shown in section to more clearly disclose the construction.

Figure 2 is a view, partly in side elevation and partly in vertical section, of the receptacle and supporter. The planes, in which the view is taken, are indicated by the line 2—2 of Figure 1.

In detail, my invention finds its greatest use in electrical display signs which are provided with a plate 3 having an aperture 4 therein. These apertures are provided in a surface of the sign through which electrical conductors are led to supply current to the sign lamps, or, in the case of signs equipped with gas-filled electric discharge tubes, to provide anchors for the terminals of the tubes. The usual procedure is to insert in each aperture, from each side of the plate, mating halves of, usually porcelain bushings, which bushings are usually joined together by means of screw threads. In the signs, in which the plate is enameled, over-tightening of the sections of the bushings will crack or check the enamel, thereby allowing the entry of water to the metal which will quickly corrode the latter and cause destruction of the bond between the enamel and the underlying plate. To prevent the possibility of so cracking the enamel, it is the usual practice to provide rubber gaskets, between the bushing sections and the plate, which will absorb any excess pressure created by overtightening of the sections.

The life of these gaskets is, however, very short, due to the small amount of rubber therein which will, after exposure to the elements for a short time, lose its elasticity and possibly develop cracks which cracks will admit moisture to seep through the plate and upon reaching bare current-carrying terminals or conductors cause leakage of the current to ground which is often of such an amount as to blow the line fuses. The porcelain bushing members are also subject to cracking, due to excess vibration, which will cause further entry of water through the plate. Another undesirable feature is that should a porcelain section of the bushing become cracked it will be usually found that upon removal thereof, the rubber gasket has adhered to both the bushing and plate with the result that when the bushing is removed, the gasket will be destroyed, necessitating its replacement. If the section of the bushing within the sign becomes damaged, it is obvious that considerable work is necessary to replace it since it may be reached only from the rear of the sign. This type of replacement usually requires the services of two men, respectively, in front and at the rear of the sign so that the two sections of the bushing may be properly mounted.

I have overcome all of these difficulties by providing a bushing which is constructed as a unit, which may be instantly attached or detached, which will provide a water-tight connection, thereby preventing the passage of moisture through the plate with which it is used, and which will act, in signs provided with frail glass tubes, as a shock absorber for protecting the tubes against excessive vibration.

The bushing comprises a rubber annulus having a central bore 5 and a groove 6 in the periphery thereof which provides a head portion, generally indicated by the numeral 7, and a skirt portion indicated by the numeral 8. The head is cut, as is shown in Figure 1, to provide a rim 9, which receives the U-shaped flange 10 of a metallic socket provided with a sleeve 11, positioned in the bore 5, and having screw threads formed therein which engage corresponding threads formed on a terminal plug indicated by the dot and dash lines 12, and a flap 13 which overlies the flange 10 and provides a gasket 14 between the flange and the flange 15 formed on the terminal plug.

In mounting the bushing in the plate aperture, the former is tilted and a portion of the skirt 8 is inserted in the aperture so that the edge of the aperture will be seated in the groove 6. The bushing is now pressed axially of the aperture and, at the same time, forced transversely thereof, toward the point of engagement of the plate with the groove, so that the outer edge of the skirt at the top of the groove will be brought into alinement with the edge of the plate aperture whereupon the skirt may be pushed through the aperture and allowed to expand so that the plate will be seated in the groove 6.

In detaching the bushing, it will be apparent that by bending a portion of the skirt 8 inwardly toward the axis of the bore 5, and pushing the bent portion of the skirt through the plate aperture, the remainder of the skirt will follow through the aperture upon exerting a slight pull on the bushing axially thereof.

Upon inspection of Figure 2 it will be seen that when the bushing is in place in the plate aperture, and the flange 15 of the terminal plug is screwed into contact with the gasket portion 14 of the head of the bushing, all points through which water might pass through the plate aperture are sealed, thus assuring, regardless of the quantity of water on the surface of the plate or the force of wind against the surface which would quickly drive water through any aperture in the plate if the latter existed, that the current carrying elements within the sign are protected against possible leakage or short circuiting.

It will also be apparent the bushing provides a resilient mounting, for electric discharge tubes, which will project the latter against abnormal shocks or vibration and thereby prevent cracking or shattering of the fragile glass tubing thereof.

Other important features are that the bushing is a unitary structure which requires the use of no separate washers or other such parts in the attachment thereof; that, comprising but a single piece it may be mounted and dismounted by one man, and, when the knack of inserting it in the plate aperture has been mastered, by the use of but one hand; and due to the absence of any unyielding surfaces for securing the bushing in the plate aperture, the danger of chipping or cracking of the surface of the plate, should the latter be enameled, is eliminated.

What is claimed is:

1. An electrical terminal bushing adapted to be inserted in a plate having an aperture therein, comprising an annulus of resilient material having a peripheral groove therein, a portion lying at one side of said groove deformable to pass through said aperture to position said groove in engagement with portions of said plate bordering said aperture, a portion lying at the other side of said groove, and a terminal receiving member having a flange thereon embedded in said last mentioned portion of said annulus.

2. An electrical terminal bushing adapted to be inserted in a plate having an aperture therein, comprising a ring of resilient material having a peripheral groove to provide a pair of spaced rims, one of said rims being deformable to pass through said aperture to position said groove in engagement with portions of said plate bordering said aperture, a terminal receiving socket disposed in said ring and having a flange secured to said other rim, and an integral portion of said other rim overlying said flange to provide a gasket between said flange and a surface of an element carrying an electric terminal inserted in said socket.

GEORGE R. GOBER.