Roth & Gamble,

Piston Packing.

No. 51,622. Patented Dec. 19, 1865.

Fig. 5.

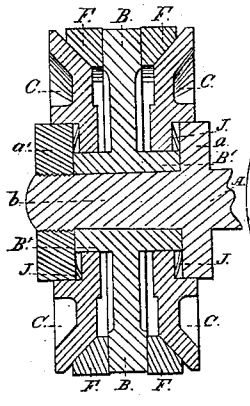

Fig. 2.

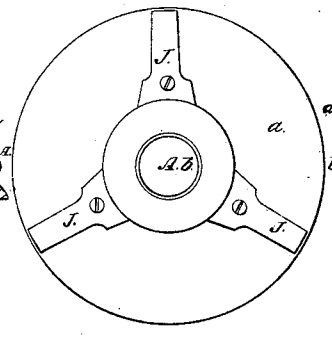

Fig. 1.

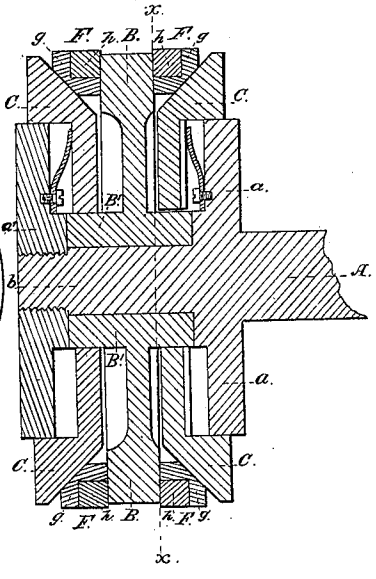

Fig. 3.

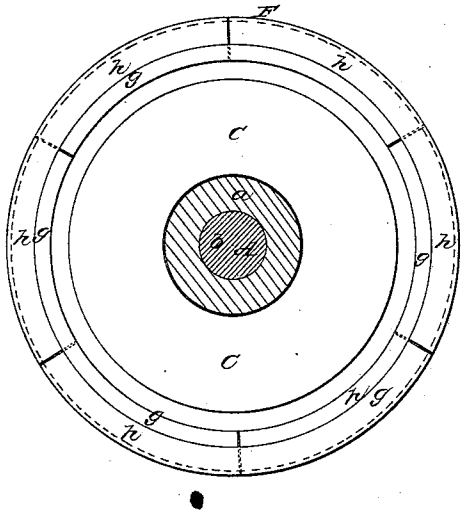

Fig. 4.

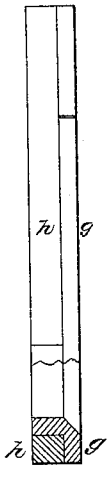

Witnesses:
R. T. Campbell.
Edw. Schafer

Inventor:
K. J. Roth
D. R. Gamble
by his Attys
Munn & Co.

N. PETERS, PHOTO-LITHOGRAPHER, WASHINGTON, D. C.

UNITED STATES PATENT OFFICE.

FRANK J. ROTH AND DAVID R. GAMBLE, OF NEWARK, OHIO.

IMPROVEMENT IN STEAM-ENGINE PISTONS.

Specification forming part of Letters Patent No. **51,622**, dated December 19, 1865.

To all whom it may concern:

Be it known that we, FRANK J. ROTH and DAVID R. GAMBLE, of Newark, in the county of Licking and State of Ohio, have invented a new and Improved Piston; and we do hereby declare that the following is a full, clear, and exact description thereof, reference being had to the accompanying drawings, making a part of this specification, in which—

Figure 1 is a diametrical section through the improved piston. Fig. 2 is anend view of the piston-rod and one of the spring-holding disks. Fig. 3 is a section through the piston, taken in the plane indicated by red line *x x*, in Fig. 1. Fig. 4 is a view of the packing-rings detached from the piston. Fig. 5 is diametrical section through a piston which has solid packing-rings.

Similar letters of reference indicate corresponding parts in the several figures.

The object of this invention is to so construct a piston for steam-engines and other purposes that the pressure of steam on the followers of the piston will cause them to expand the packing, and thus keep it in contact with the surface of the cylinder within which the piston works and compensate for any wear of said packing, as will be hereinafter described.

To enable others skilled in the art to understand our invention, we will describe its construction and operation.

In the accompanying drawings, A represents the piston-rod having a circular plate, *a*, formed on or suitably applied to it, which plate is somewhat less in diameter than the diameter of the followers. On the end of the reduced stem *b* of the piston-rod a male screw is cut to receive a circular plate or nut, *a′*, corresponding in diameter to the permanently-fixed plate *a*.

The piston-head B consists of a circular narrow disk, slightly dished on both sides, and having a hollow elongated hub, B′, which receives through it the stem *b* of the piston-rod, as shown in Figs. 1 and 5. This hub abuts against the circular plates *a a′*, and the head B is thereby held rigidly in its place.

C C are the two followers, which are placed concentrically over the hub B′, so as to have more or less play between the intermediate fixed head, B, and the fixed plates *a a′*. The followers are allowed to move in a direction with the length of the piston-rod. The outer surfaces of these followers C C are recessed so as to receive the circular plates *a a′*, as shown in Figs. 1 and 5, and the plates fit so snugly within said recesses as to prevent the admission of steam within the piston.

The circumferential edges of the two followers C C are beveled inward or toward the piston-head B, for the purpose of receiving the packing-rings, which are so formed as to fit within the spaces between said beveled surfaces and the surfaces of the piston-head, as shown in Figs. 1 and 5. These packing-rings F F may be made of solid segment, as shown in Fig. 5; but we prefer to construct these rings of beveled segments *g g g*, having a rabbet formed in them to receive the segments *h h h*, which latter are applied so as to break joints with the beveled segments *g g g*, as shown in Figs. 3 and 4.

The followers C C are held in their places in contact with the packing-rings F F by means of springs J J, which are applied to the inside surfaces of the two end plates, *a a′*. These springs acting against the followers C C will cause these followers to hold the packing-rings firmly in contact with the sides of the intermediate piston-head, B, as shown in Fig. 1.

With a piston constructed as above described the steam acting upon the movable followers and pressing them toward the fixed piston-head B, will cause a separation and expansion of the packing-rings, thus increasing their diameter. The springs J J, then following up the followers, will keep the rings in their expanded state when they are not held out by the force of steam on the outside of these followers.

The pressure of steam on the piston-followers may be increased or diminished by increasing or diminishing the relative diameter of the circular plates *a a′*.

The piston which we have above described may be used for high or low pressure engines, force-pumps, air-pumps, and other purposes, and one or two followers may be used, as circumstances require. It is preferable to use two movable followers. Still, a single follower on one side of a fixed piston-head would answer. We do not therefore confine the invention to the use of two followers.

Having thus described our invention, what

we claim as new, and desire to secure by Letters Patent, is—

1. The construction of a piston with one or more movable followers, which encircle the hub of the piston-head and act to expand the packing by pressure upon their outer faces, substantially as described.

2. The combination of followers of disk-form with a fixed piston-head and an expansible pack, substantially as described.

3. The springs, or their equivalents, interposed between the movable followers and the fixed shoulders *a a'*, substantially as described.

4. The combination of the fixed plates or shoulders *a a'* with the movable followers C C and the fixed piston-head B, substantially as described.

5. The combination of the movable beveled followers C C with the beveled segments *g* and the segments *h*, substantially as described.

FRANK J. ROTH.
DAVID R. GAMBLE.

Witnesses:
J. M. CONNEL,
GEO. M. GRASSER.