(12) INTERNATIONAL APPLICATION PUBLISHED UNDER THE PATENT COOPERATION TREATY (PCT)

(19) World Intellectual Property Organization
International Bureau

(43) International Publication Date
11 November 2010 (11.11.2010)

PCT

(10) International Publication Number
WO 2010/128362 A1

(51) International Patent Classification:
C02F 1/70 (2006.01)

(21) International Application Number:
PCT/IB2009/052403

(22) International Filing Date:
5 June 2009 (05.06.2009)

(25) Filing Language: English

(26) Publication Language: English

(30) Priority Data:
61/176,386 7 May 2009 (07.05.2009) US

(72) Inventor; and
(71) Applicant : **SUGAWARA, Hitoshi** [JP/US]; 3148 Joshua Tree Circle, Stockton, California 95209 (US).

(81) Designated States *(unless otherwise indicated, for every kind of national protection available)*: AE, AG, AL, AM, AO, AT, AU, AZ, BA, BB, BG, BH, BR, BW, BY, BZ, CA, CH, CL, CN, CO, CR, CU, CZ, DE, DK, DM, DO, DZ, EC, EE, EG, ES, FI, GB, GD, GE, GH, GM, GT, HN, HR, HU, ID, IL, IN, IS, JP, KE, KG, KM, KN, KP, KR, KZ, LA, LC, LK, LR, LS, LT, LU, LY, MA, MD, ME, MG, MK, MN, MW, MX, MY, MZ, NA, NG, NI, NO, NZ, OM, PG, PH, PL, PT, RO, RS, RU, SC, SD, SE, SG, SK, SL, SM, ST, SV, SY, TJ, TM, TN, TR, TT, TZ, UA, UG, US, UZ, VC, VN, ZA, ZM, ZW.

(84) Designated States *(unless otherwise indicated, for every kind of regional protection available)*: ARIPO (BW, GH, GM, KE, LS, MW, MZ, NA, SD, SL, SZ, TZ, UG, ZM, ZW), Eurasian (AM, AZ, BY, KG, KZ, MD, RU, TJ, TM), European (AT, BE, BG, CH, CY, CZ, DE, DK, EE, ES, FI, FR, GB, GR, HR, HU, IE, IS, IT, LT, LU, LV, MC, MK, MT, NL, NO, PL, PT, RO, SE, SI, SK, TR), OAPI (BF, BJ, CF, CG, CI, CM, GA, GN, GQ, GW, ML, MR, NE, SN, TD, TG).

Declarations under Rule 4.17:

— *of inventorship (Rule 4.17(iv))*

Published:

— *with international search report (Art. 21(3))*

(54) Title: A TORPEDO-SHAPED CONTAINER AND WING ATTACHMENT FOR HYDROGEN-GENERATING MINERAL STICKS

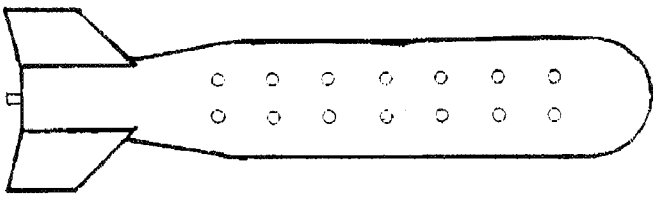

FIG. 3

(57) Abstract: A torpedo-shaped container is disclosed, comprising an integrated wing component (FIG. 3) to serve as a case for hydrogen-generating mineral stick media. The container is a cylindrical receptacle, comprising a plurality of holes to allow for passage of hydrogen gas (FIG. 4). The key element of the invention is a flexible wing component (FIG. 5). The wing component solves two major limitations of hydrogen sticks on the market today: stick slippage and water flow obstruction. By nature of its design, the wings act as a stopper to prevent the hydrogen stick from slipping out of an inverted water bottle (FIG.2). The wing could also be produced separately, as an attachment (FIG. 6) for direct fitment on a hydrogen-generating mineral stick. The present invention optimizes user satisfaction by averting the shortcomings of currently marketed hydrogen-generating mineral sticks.

WO 2010/128362 A1

Description

Title of Invention: A TORPEDO-SHAPED CONTAINER AND WING ATTACHMENT FOR HYDROGEN-GENERATING MINERAL STICKS

Technical Field

[1] The present invention relates to containers for use with hydrogen-generating mineral sticks.

Background Art

[2] Biotechnological products known as 'hydrogen-generating mineral sticks', originally developed in Japan, are now emerging in the global market. These hydrogen-generating mineral sticks (also known as hydrogen rich water generators, water ionizer sticks, hydrogen-producing mineral sticks, and alkaline water sticks) are activated for use by submersion in a bottle of drinking water. The reaction between the hydrogen stick's internal media and the water transforms drinking water that is both purified and enhanced with abundant hydrogen. Scientific studies have theorized potential health benefits from consumption of hydrogen-rich water, by virtue of the antioxidant properties of hydrogen.

[3] There are two major shortcomings of current hydrogen-generating mineral sticks: stick slippage and water flow obstruction upon inversion of a water bottle. Consequently, a person drinking directly from a water bottle will find the stick falling straight into their mouth - or colliding with their teeth or lips. Or, a person pouring from a bottle to a separate cup will find the stick slipping out and into the cup. Furthermore, when a stick falls into and blocks the bottle opening, it obstructs the flow of water. These occurrences are bothersome and inconvenient.

[4] It is known in the prior art the disclosure of a method of producing hydrogen rich water as well as a hydrogen rich water generator. This discussion can be found in U.S. Patent Number 7,189,330 issued to Hayashi and Daimaru, dated March 13, 2007. The prior art fails to address any type of hydrogen-generating mineral stick comprising a wing component as a means to prevent stick slippage and water flow obstruction.

Disclosure of Invention

Technical Problem

[5] There are two major shortcomings of current hydrogen-generating mineral sticks: stick slippage and water flow obstruction upon inversion of a water bottle. Consequently, a person drinking directly from a water bottle will find the stick falling straight into their mouth - or colliding with their teeth or lips. Or, a person pouring

from a bottle to a separate cup will find the stick slipping out and into the cup. Furthermore, when a stick falls into and blocks the bottle opening, it obstructs the flow of water. These occurrences are bothersome and inconvenient.

Solution to Problem

[6] The present invention pertains to a container that serves as a case for hydrogen-generating media. Specifically, the invention is a container in the shape of a torpedo, characterized by a cylindrical hollow body portion and a tail portion which includes 'wings' in the style of a torpedo's propulsion blades. The body of the container comprises a plurality of holes which serve as outlets for hydrogen gas.

[7] The integrated wings effectively prevent the torpedo-shaped container from falling out of an inverted water bottle. The flexible wings are squeezed to pass through the neck of a water bottle. Upon entry, the flexible wings flare out to their original form. Upon inversion of the water bottle, the wing tips will contact the lower inner rim, preventing the stick from slipping out. Additionally, the wing design permits a free flow of water past the wings, thereby avoiding water obstruction at the neck of the bottle.

[8] The wing portion could also be made as a separate component. In this instance, the wing accessory would be designed as a slip-on attachment for direct fitment on a hydrogen-generating mineral stick.

[9] It can thus be seen that the present invention serves as novel container for hydrogen-generating mineral sticks, which successfully integrates a wing component as a solution to prevent stick slippage and water flow obstruction.

Advantageous Effects of Invention

[10] The advantages of the invention are twofold: 1) prevention of stick slippage; and 2) prevention of water flow obstruction.

Brief Description of Drawings

[11] FIG. 1 generally illustrates a perspective view of the container in an upright water bottle.

[12] FIG. 2 generally illustrates a perspective view of the container in an inverted water bottle.

[13] FIG. 3 generally illustrates a perspective view of the container and integrated wing component in accordance with an embodiment of the invention.

[14] FIG. 4 generally illustrates side elevation and cross-sectional views of the container and the wing component.

[15] FIG. 5 generally illustrates side elevation and cross-sectional views of the wing component.

[16] FIG. 6 generally illustrates perspective and cross-sectional views of the wing

component as a separate attachment in accordance with another embodiment of the invention.

Best Mode for Carrying out the Invention

[17] With reference to the drawings and, in particular, with reference to FIG. 4, the container comprises a hollow tubular body portion and a tail portion with an integrated wing component. The body, preferably made of a plastic material, is defined by an outer shell (1), outlet holes (5), and a wing component at the tail end (B), comprising blades (2,3,4). FIG. 4 also contains cross-sectional drawings, where A-B represents the lengthwise cross section of the container, and C-D represents the widthwise cross section. The container is preferably tapered at the tail end where the wing blades attach to the body, as can be seen in FIG. 3.

[18] The wing component is preferably fabricated of a flexible plastic material, comprising a plurality of blades, preferably three blades. The flexible wings are squeezed to pass through the neck of a water bottle. Upon entry, the flexible wings flare out to their original form. Upon inversion of the water bottle, the wing tips will contact the lower inner rim (FIG.2), preventing the stick from slipping out. Additionally, the wing design permits a free flow of water past the wings, thereby avoiding water obstruction at the neck of the bottle. The dimensional span of each wing blade will be of a size just large enough to touch the lower inner rim of a water bottle (FIG.2).

[19] Alternatively, the wing component could be made as a separate attachment (FIG. 5) for direct fitment on a hydrogen-generating mineral stick. Figures 5 and 6 depict the wing component as a separate accessory. Such an attachment would be appropriate for certain types of mineral sticks which are made of a porous ceramic case instead of a plastic case. The slip-on wing attachment need not be restricted for use on ceramic-style mineral sticks, however. It may be used on cylindrical mineral sticks of any material (plastic, ceramic, etc.) in which there is a desire to maintain the stick's original construction and appearance.

[20] The container is not necessarily limited to a specific material, and those of skill in the art will recognize that containers in accordance with the teachings of the invention may be comprised from various plastic materials. By way of example, without limitation, containers in accordance with various embodiments of the invention may be comprised of polypropylene (PP), high-density polyethylene (HDPE), recycled polyesters and polyolefin resins, and bio resins.

[21] Although the invention has been described in connection with a preferred embodiment, it should be understood that various modifications, additions and alterations may be made to the invention by one skilled in the art without departing from the spirit

and scope of the invention as defined in the appended claims.

Claims

[Claim 1] 1. A container in the shape of a torpedo for hydrogen-generating mineral sticks, comprising a cylindrical body with an integrated flexible wing component.

[Claim 2] 2. The container recited in claim 1 wherein said body is fabricated from a plastic material.

[Claim 3] 3. The container recited in claim 1 wherein said body includes holes which serve as outlet passages for hydrogen gas.

[Claim 4] 4. The container recited in claim 1 wherein said wing component is fabricated of a flexible material.

[Claim 5] 5. The wing component recited in claim 1 which may be produced as a separate attachment and fitted directly to a hydrogen-generating mineral stick.

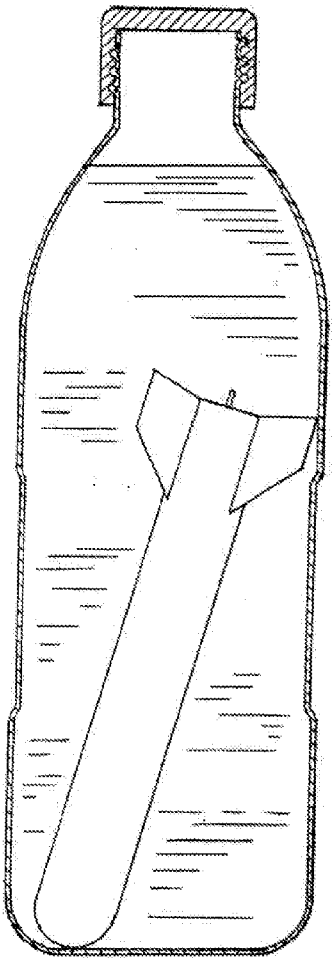

FIG. 1

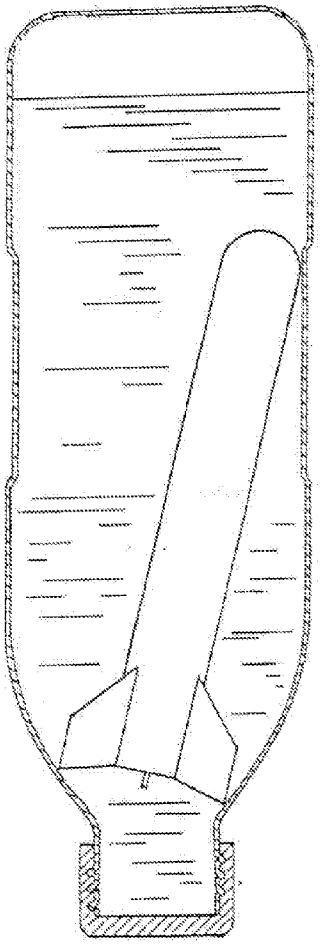

FIG. 2

FIG. 3

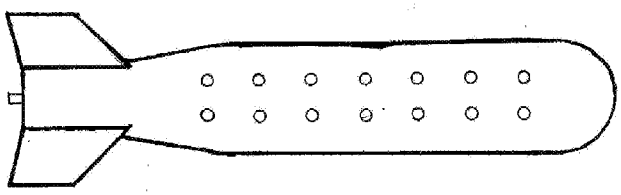

FIG. 3

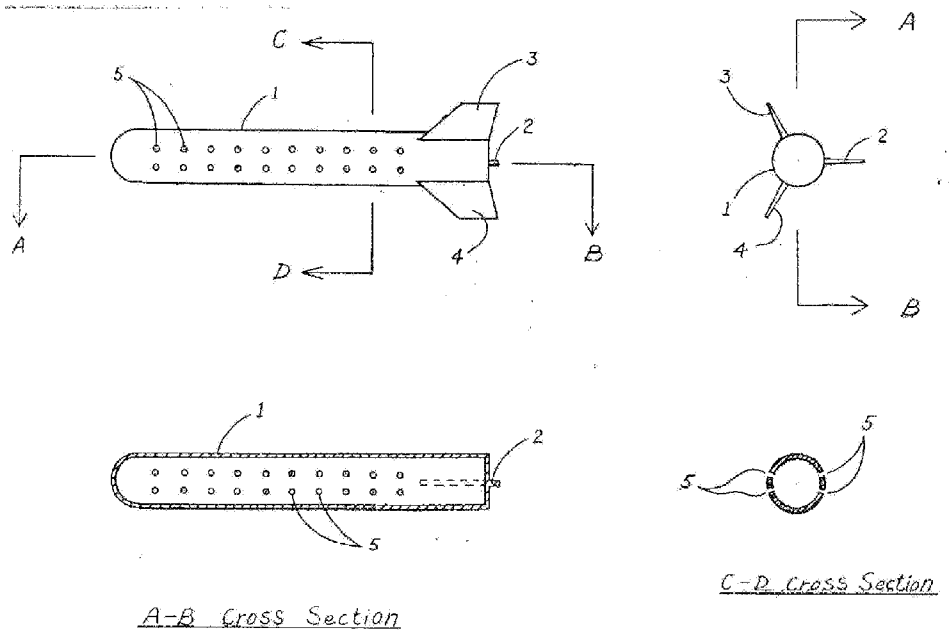

FIG. 4

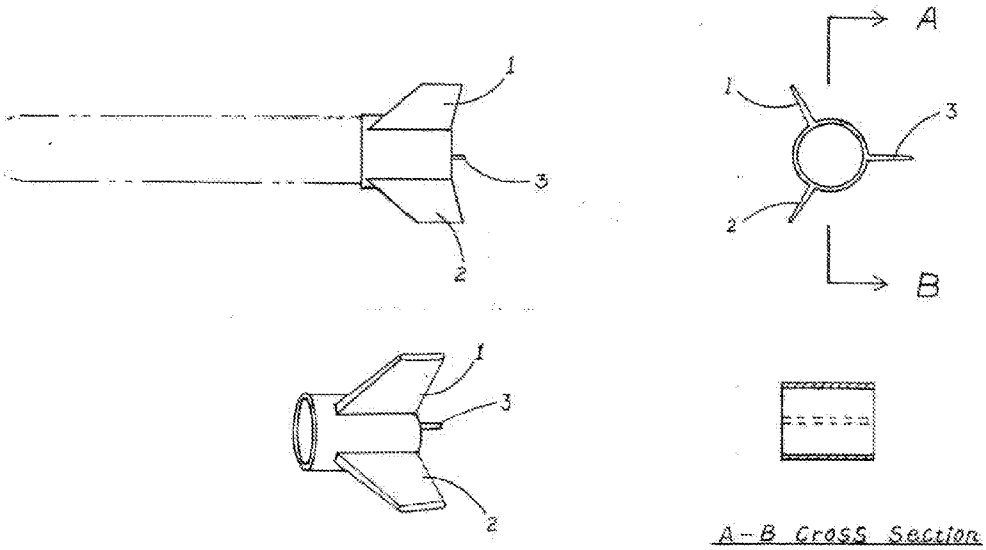

FIG. 5

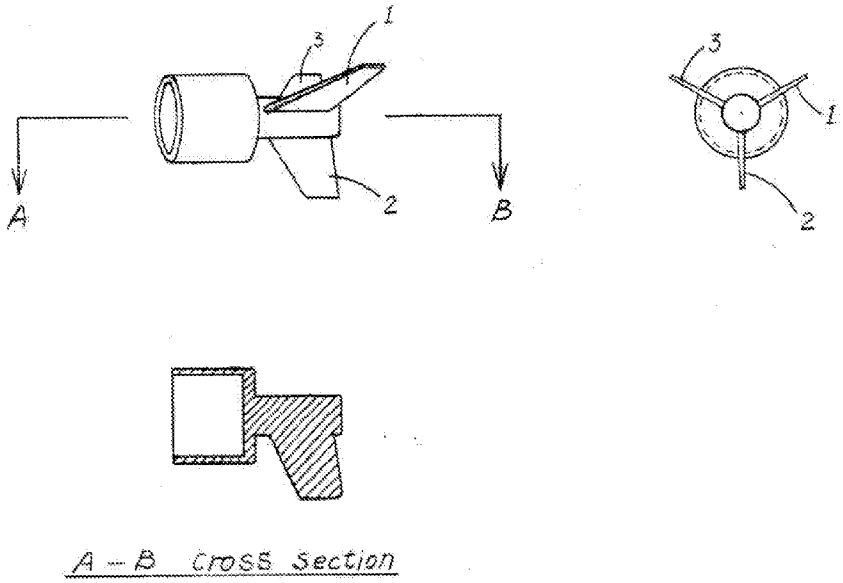

FIG. 6

INTERNATIONAL SEARCH REPORT

International application No.
PCT/IB2009/052403

A. CLASSIFICATION OF SUBJECT MATTER
IPC(8) - C02F 1/70 (2009.01)
USPC - 210/757
According to International Patent Classification (IPC) or to both national classification and IPC

B. FIELDS SEARCHED

Minimum documentation searched (classification system followed by classification symbols)
IPC(8) - C02F 1/70 (2009.01)
USPC - 210/501, 757

Documentation searched other than minimum documentation to the extent that such documents are included in the fields searched

Electronic data base consulted during the international search (name of data base and, where practicable, search terms used)
PatBase and Google Patents

C. DOCUMENTS CONSIDERED TO BE RELEVANT

Category*	Citation of document, with indication, where appropriate, of the relevant passages	Relevant to claim No.
Y	KR 20060003418 A (SIK et al) 11 January 2006 (11.01.2006) entire document	1-5
Y	USD 396,631 S1 (DUGRENIER et al) 04 August 1998 (04.08.1998) entire document	1-5
Y	US 4,787,973 A (ANDO et al) 29 November 1988 (29.11.1988) entire document	2

☐ Further documents are listed in the continuation of Box C. ☐

* Special categories of cited documents:
"A" document defining the general state of the art which is not considered to be of particular relevance
"E" earlier application or patent but published on or after the international filing date
"L" document which may throw doubts on priority claim(s) or which is cited to establish the publication date of another citation or other special reason (as specified)
"O" document referring to an oral disclosure, use, exhibition or other means
"P" document published prior to the international filing date but later than the priority date claimed
"T" later document published after the international filing date or priority date and not in conflict with the application but cited to understand the principle or theory underlying the invention
"X" document of particular relevance; the claimed invention cannot be considered novel or cannot be considered to involve an inventive step when the document is taken alone
"Y" document of particular relevance; the claimed invention cannot be considered to involve an inventive step when the document is combined with one or more other such documents, such combination being obvious to a person skilled in the art
"&" document member of the same patent family

Date of the actual completion of the international search	Date of mailing of the international search report
14 October 2009	22 OCT 2009
Name and mailing address of the ISA/US Mail Stop PCT, Attn: ISA/US, Commissioner for Patents P.O. Box 1450, Alexandria, Virginia 22313-1450 Facsimile No. 571-273-3201	Authorized officer: Blaine R. Copenheaver PCT Helpdesk: 571-272-4300 PCT OSP: 571-272-7774