Dec. 15, 1942. R. E. HENRY 2,305,005

COATING MACHINE

Filed April 25, 1941 3 Sheets-Sheet 1

Fig. 1.

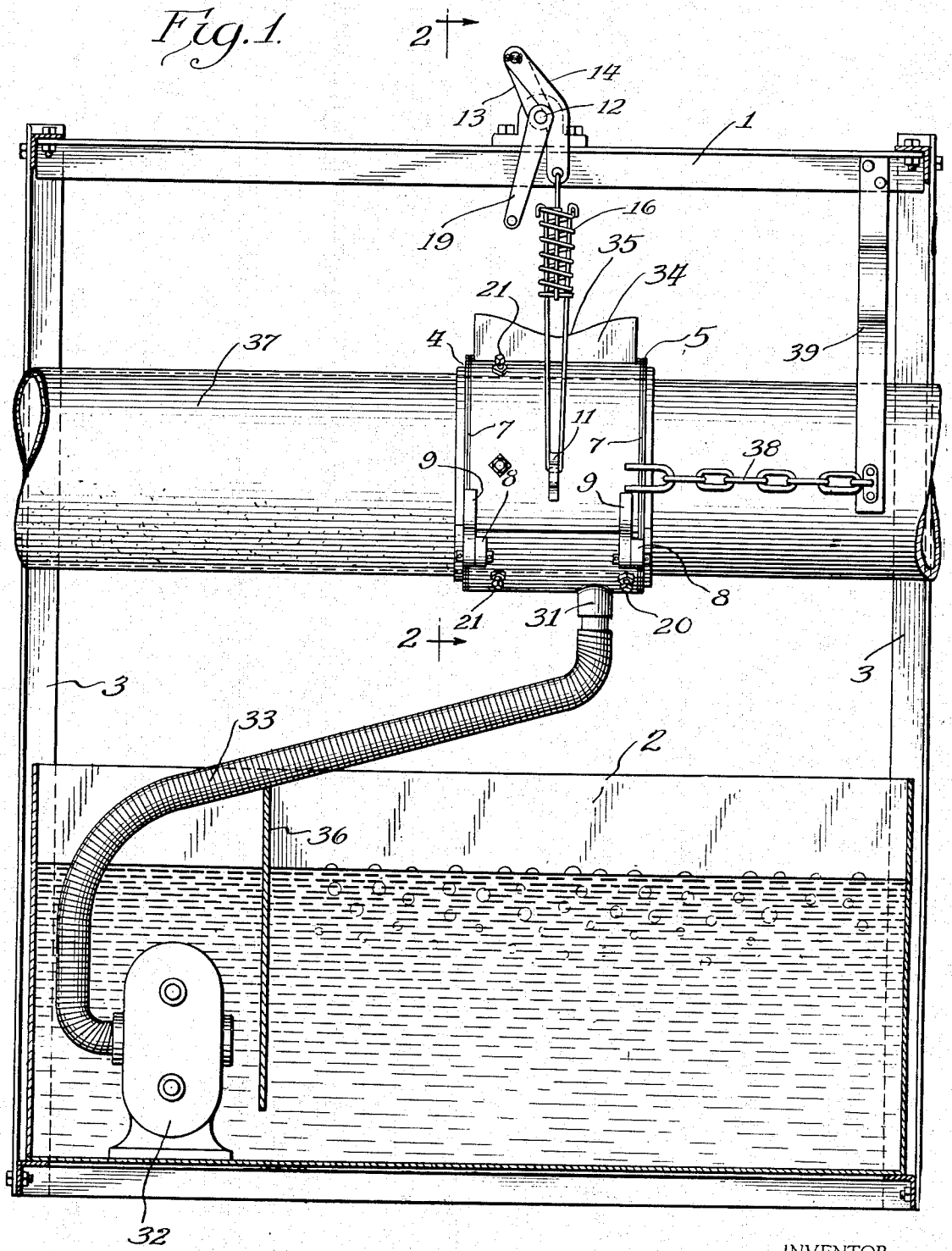

INVENTOR.
Remmel E. Henry.
BY George H. Simmons
Attorney.

Dec. 15, 1942. R. E. HENRY 2,305,005

COATING MACHINE

Filed April 25, 1941 3 Sheets-Sheet 2

Fig. 2.

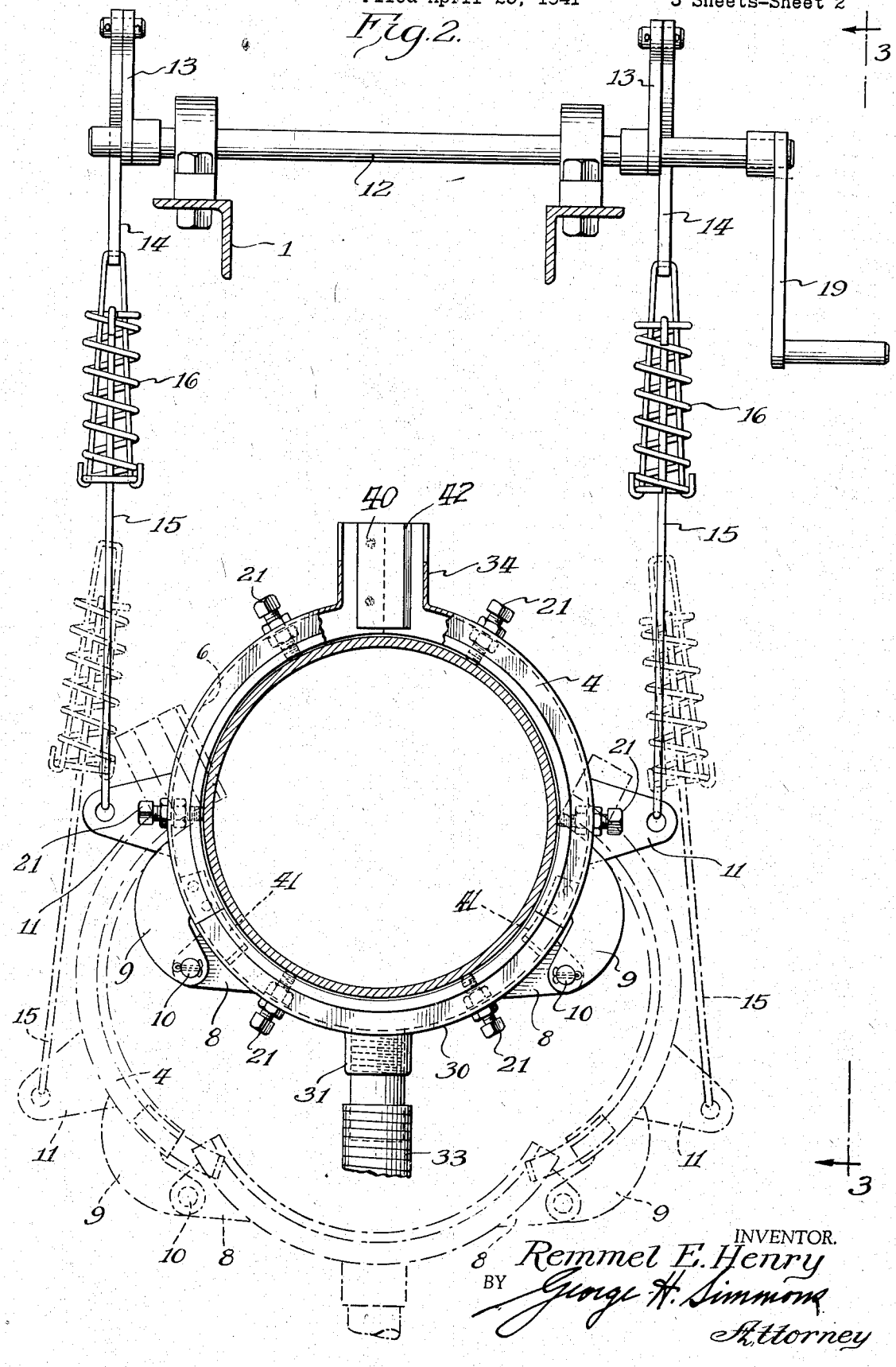

INVENTOR.
Remmel E. Henry
BY George H. Simmons
Attorney

Dec. 15, 1942. R. E. HENRY 2,305,005

COATING MACHINE

Filed April 25, 1941 3 Sheets-Sheet 3

Fig. 3.

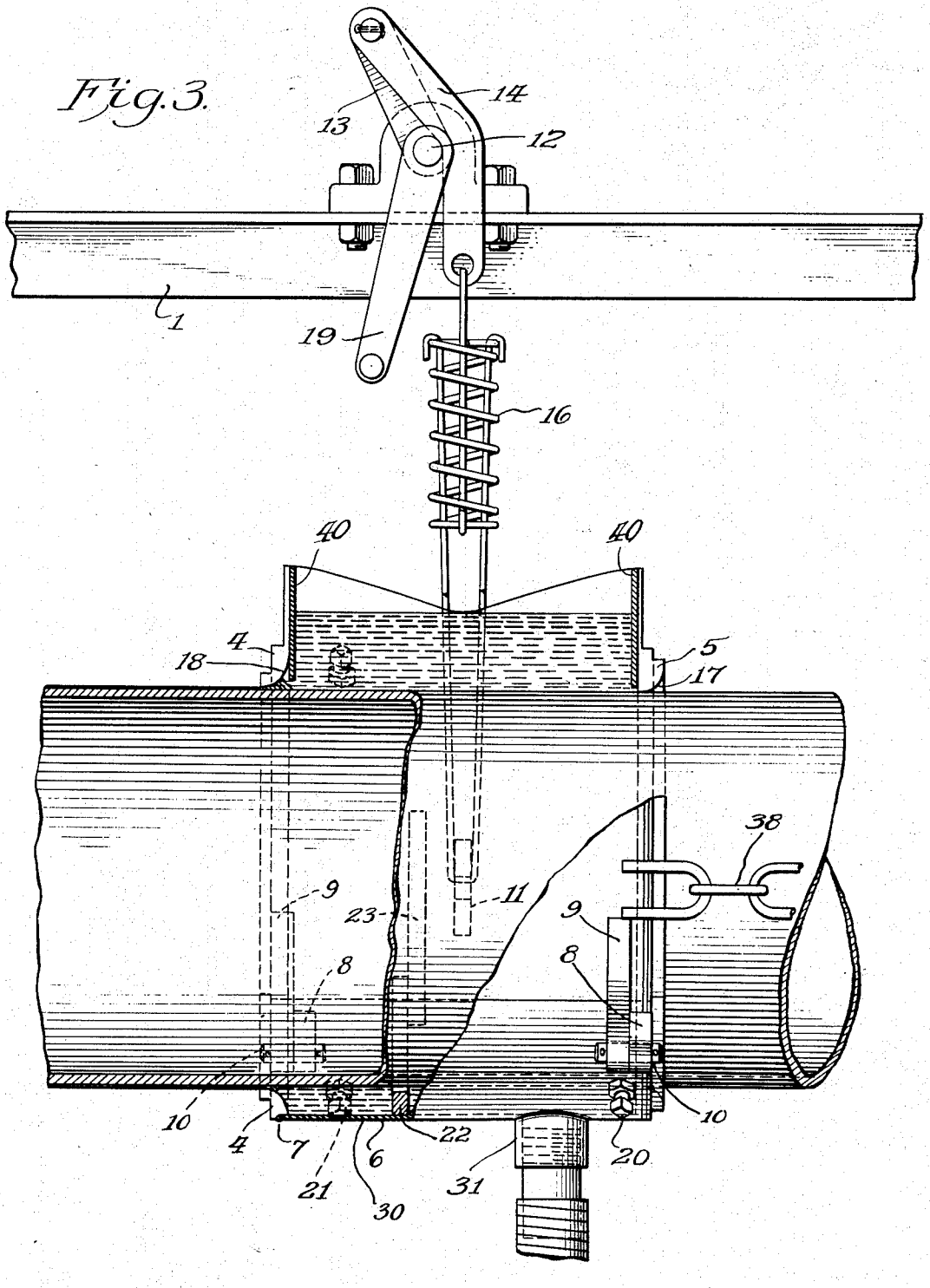

INVENTOR.
Remmel E. Henry
BY George H. Simmons
Attorney

Patented Dec. 15, 1942 2,305,005

UNITED STATES PATENT OFFICE

2,305,005

COATING MACHINE

Remmel E. Henry, Longview, Tex., assignor to Pipe Line Service Corporation, Franklin Park, Ill., a corporation of Illinois

Application April 25, 1941, Serial No. 390,244

13 Claims. (Cl. 91—32)

This invention relates to machines for applying coating materials to pipe and the like, and has for its principal object the provision of a machine that will apply to the pipe a coating that is devoid of holidays, pinholes or other imperfections.

The principal object of the invention is the provision of a coating shoe for forming a bath of coating material that is free from entrapped gas and in which the pipe is immersed.

A further object of the invention is the provision of a mounting for the shoe which permits rapid disengagement of the shoe from the pipe and reengagement therewith.

Still another object of the invention lies in the provision of a shoe having sufficient elasticity to permit it to ride over welds and other obstructions on the pipe surface and at the same time to maintain the bath of coating material in which the pipe is immersed.

Still another object of the invention lies in the provision of a shoe which is adjustable so that the thickness of the film of coating material applied to the pipe may be varied.

Still another object of the invention lies in the provision of arrangements for supplying the shoe with coating materials that are free from entrapped gas bubbles and the like.

Further objects of the invention, not specifically mentioned here, will be apparent from the detailed description and claims which follow, reference being had to the accompanying drawings in which a preferred embodiment of the invention is shown by way of example and in which:

Figure 1 is an elevational view of a portion of a machine, partly in section, showing the coating shoe and mounting therefor;

Figure 2 is a cross-sectional view, taken substantially along the line 2—2 of Figure 1, and drawn to an enlarged scale; and

Figure 3 is an elevational view, partly in section, showing the coating shoe construction.

Pipes, pipe lines and the like, are frequently protected from corrosion and electrolysis by an application of a coating material. In certain instances, a wrapper or wrappers are applied over the coating material before the same has set, with the result that the wrapper is imbedded in the coating material and thereby bonded to the pipe to afford additional protection. In other instances, the coating material alone is relied upon to protect the pipe.

The coating material is usually applied hot and on cooling forms a fairly solid film or sleeve around the pipe and to be effective, it is necessary that the sleeve so formed be free from holidays, pinholes or other imperfections through which moisture may enter and come into contact with the pipe. In instances where a wrapper is applied immediately on top of the coating and before the coating has cooled, the tension under which the wrapper is applied trowels the coating and tends to squeeze out of it any entrapped gas and also tends to move the coating into holidays that may have been left by the coating shoe. In installations where no wrapper is used, this trowelling action is not present, and if the coating is to be free from imperfections, the coating shoe itself must be capable of applying a holiday free film on the pipe.

It has been found that a goodly portion of the holidays in the coating material are the result of gas entrapped in the coating material supplied to the shoe. This is particularly true when the coating material contains solvents which vaporize at or near the temperature at which the coating material is applied. It has been the practice heretofore to supply coating material to the shoe from a tank of material by pumping the same to a point above the pipe and then allowing this material to flow over the pipe. In certain instances, the shoes used embrace only the lower half of the pipe and in other instances, a full shoe encircling the pipe is employed and the coating material is dropped into a funnel-like projection on the top of the shoe. It has been found that permitting the coating material to drop into the shoe or on to the pipe causes a certain amount of air to be entrapped in the material and that this entrapped air may cause bubbles to be formed in the coating on the pipe.

In accordance with the teachings of the present invention, the flow of coating material is reversed, that is, the pump forces the material through a suitable supply line that leads into the bottom of the shoe, the material flowing upwardly through the shoe and excess material escaping from the shoe through an overflow port located on the top thereof. The pump is arranged to draw coating material from the bottom of the tank and is protected so that it cannot pick up coating material which has just fallen back into the tank. With this arrangement, air or gas entrapped in the coating material by the overflow falling back into the pool of such material is allowed to escape before the material is recirculated through the system, with the result that the stream of material flowing from the pump to the coating shoe is free from gas or

entrapped air and is capable of forming a holiday free coating on the pipe.

Coating machines now in general use are of two main types: the so-called stationary type in which the coating machine remains fixed and the pipe is moved through it to produce a relative movement between the coating shoe and the pipe to apply the material to the pipe, and the second or so-called travelling type machine wherein the pipe remains fixed and the machine travels therealong to produce the relative movement between the shoe and pipe by which the coating is applied to the pipe. The coating shoe of the instant invention may be used equally well in machines of either type. Most stationary type machines, and some travelling type machines, apply a wrapper immediately over the coating material and when the shoe of the present invention is used in such a combination, the work turned out by the machine is improved and when subjected to electrical tests for detecting holidays, fewer imperfections are found.

Referring now to the drawings in more detail, particularly Figure 1, a frame 1 with a tank 2 is disposed beneath the frame and connected thereto by suitable supports 3. The frame may well be a part of the travelling type coating machine shown in Patent No. 2,188,001 issued to Duael, et al., January 23, 1940, or the stationary machine of the type shown in Patent No. 2,048,557 issued to Mickelson and Duael July 21, 1936. The details of frame construction form no essential part of the present invention and the frame has been shown diagrammatically herein, reference being had to the foregoing patents for such details as needed.

The coating shoe consists of a pair of rings 4 and 5 between which is a sheet metal wall 6 forming with the rings a generally cylindrical shoe that embraces the pipe. The rings and walls are preferably welded together, as indicated at 7, so as to form a rigid structure capable of withstanding the rough usage to which it will be subjected.

In order to permit the shoe to be taken off of and put on the pipe line and to permit it to ride over welds or other obstructions thereon, the rings 4 and 5 and the wall 6 are formed in a plurality of sections. As will be seen in Figure 2, in the embodiment shown by way of example, three sections are provided. The bottom one of these sections contains ears 8 and the two upper ones contain co-operating ears 9, these ears being pierced to permit pins 10 to be projected therethrough to form a hinge connecting the three sections together. Projecting outwardly from the two upper sections of the shoe are bosses 11 to which supporting links by which the shoe is supported on the frame are attached.

In the embodiment shown in the drawings, a shaft 12 is supported upon the frame 1 by suitable bearings and carries bell crank levers 13 fixed thereto. Pivoted to these levers are generally L-shaped links 14 which support at their free ends links 15 that are connected to the ears 11 on the shoe. Each link contains a spring 16 so as to render the same resilient and permit the shoe to move a limited distance vertically of the frame. The particular construction of linkage shown in the drawings is shown by way of example and may be modified within the teachings of the invention.

Shaft 12 also carries a crank arm 19 and when it is desired to lower the shoe away from the pipe, this arm is rotated in clockwise direction, Figure 1, moving the shaft and link to lower the pivotal connection between the bell crank levers and links 14. This movement lowers the links 15 causing the shoe first to open and then to drop away from the pipe into the position in which it is shown in dotted lines in Figure 2. The rotation of crank 19 in the opposite direction will raise the shoe and re-engage it with the pipe.

As will be seen best in Figure 3, the ring 5 is rounded to form an entrance port 17 leading into the shoe, this ring being of such size that the innermost edge of the port engages the pipe fairly snugly to center the pipe therein. The ring 4 contains a similar flared edge leading out of the shoe. This ring is slightly larger than the ring 5 so that the exit port 18 has a diameter equal to the outside diameter of the pipe, plus twice the thickness of the minimum thickness of coating that the shoe is designed to apply.

In order to center the shoe upon the pipe, two spacing screws 20 are located in the bottom member of the shoe adjacent the ring 5, and a plurality of spacing screws 21 are disposed adjacent the ring 4. As shown, six screws 21 are employed although this number may be varied. Screws 20 engaging the bottom side of the pipe relieve the bottom portion of ring 5 of wear which would be occasioned by the tension of the springs 16, pulling the shoe upwardly and the lower ones of the screws 21 perform a similar function. By proper adjustment of the screws, the shoe is centered on the pipe so that the coating applied thereto is of uniform thickness around the pipe.

The bottom section 30, Figure 2, of the wall 6 contains a nipple 31 located near the forward end of the shoe, that is, near the end ring 5. The nipple is attached in any preferred manner such as by welding and communicates with the inside of the cylindrical shoe.

Located within the tank 2 is a pump 32 having connected to its outlet side a flexible hose 33 that is connected to the nipple 31. The pump, which may be of any preferred type, forces material from the tank 2 through the pipe 33 into the shoe, where this material encircles the pipe and is confined in the shoe by the end rings 4 and 5. Rising out of the top of the shoe at the junction of the two sections thereof is a generally rectangular box-like member 34 forming a reservoir into which the coating material travels. It will be noted in Figure 1 that the end walls of the reservoir 34 are higher than the central section of the sidewalls, this arrangement forming a weir 35 through which the excess material in the reservoir overflows, falling down over the outer surface of the shoe and into the tank 2.

The coating material returning to the tank may entrap gas or air and to prevent material containing gas or air from being drawn into the pump, the tank 2 is provided with a baffle 36 extending from the top edge of the tank and above the upper surface of the coating material therein down to a line near the bottom of the tank. Bubbles formed in the material by the overflow of the shoe are confined in the section of the tank away from the pump and it is thereby assured that the pump will supply to the shoe only gas free material.

It will be understood that the tank 2 may be provided with suitable arrangements for applying heat to the material contained therein but since these arrangements form no part of the instant invention, they have been omitted from

the drawings to avoid an unnecessary complication thereof.

Coating materials that the shoe of the present invention must handle vary considerably at application temperatures. Certain of these materials, known generally as enamels, are of the consistency of cream at proper application temperature, while others, such as "No-Oxid" for example, are much thinner having consistency more nearly that of water.

It will be observed that the coating material at the bottom of the pipe is under the pressure of the hydrostatic head of the material in the shoe, and, in addition, is under pressure built up by the movement of the material into the shoe through nipple 31. When thin materials are being handled, this combination of pressures may cause an excessive amount of material to flow out of the shoe through the space between the ring 4 and the pipe, particularly so along the lower portion of the pipe.

To control the flow of material under these conditions, a baffle or baffles 22 may be attached to the bottom section 30 of the wall 6 of the shoe. This baffle means extends into juxtaposition to the pipe and extends slightly beyond the junctions of the bottom section 30 with the upper sections of the shoe. Each upper section carries a similar baffle means 23 which overlaps the baffle 22, as shown in Figure 3. Baffles 22 and 23 may be fixed to the shoe in any preferred manner, such as by welding, and may extend to within approximately one-quarter of an inch of the pipe surface.

With baffles 22 and 23 in place, liquid entering the shoe through nipple 31 flows mainly upwardly around the pipe, although a limited amount of it flows along the pipe horizontally through the space between the baffle means and the pipe. The pressure occasioned by the velocity of the liquid entering the pipe is thus blocked off from the ring 4 along the bottom portion of the pipe and the liquid against this ring is, in the main, only under the pressure of the hydrostatic head, and the amount of liquid passing out of the shoe through the ring 4 is limited. While only one baffle 22 and 23 is shown, a plurality of similar baffles may be used, forming in effect, a labyrinth packing along the pipe. This may be advisable in extreme cases although ordinarily one set of baffles will be sufficient.

In the operation of the device, after the coating material has been brought to application temperature, the pump is started with the coating shoe disengaged from the pipe. In certain instances it may be advantageous to lower the coating shoe into the coating material so as to more quickly bring it up to proper temperature. After the hot coating material has flowed through the shoe sufficiently to prepare it for operation, crank 18 is operated to engage the shoe with the pipe.

A relative movement between the shoe and pipe is then set up either by moving the machine along the pipe or by moving the pipe through the machine. As viewed in Figure 1, this movement is as if the pipe 37 were moving to the left. To prevent the coating shoe from being dragged along with the pipe, suitable drag links, such as chains 38, are attached to the shoe and to a frame member 39, the arrangement preventing the coating shoe from moving to the left.

Gas free coating material forced through the flexible pipe 33 into the bottom of the shoe flows around the pipe in the space between the outer wall 6 of the shoe and the pipe, the pump being run fast enough to supply sufficient material to keep the shoe full and overflowing at all times. As the shoe moves along the pipe, or the pipe moves through the shoe, the coating material in which the pipe is submerged adheres to the pipe and a certain amount of this material flows out of the shoe in the space between the ring 4 and the pipe. The adjusting screws 21 are set so that the amount of material so escaping from the shoe will be correct for the desired thickness of coating.

The movement of the coating material upwardly in the shoe scrubs the pipe free of air entrapped in pits or irregularities in the surface. This is particularly noticeable on reconditioned pipe whose surface is apt to contain pits in which air has been entrapped with shoes of the prior art. Air brought into the shoe of the present invention is scrubbed out of the pits into the coating material and allowed to escape from the shoe in the overflow. Since the air is lighter than the coating material, it naturally tends to rise therein and the upward movement of the material aids rather than hinders this natural movement.

Should a weld or other obstruction appear in the pipe, it will engage the rounded face of the entry port 17 and force the shoe open sufficiently to permit it to embrace the weld. As will be seen in Figure 2, the adjacent ends of the three sections of the shoe are provided with overlapping plates 40 and 41, which close the gaps between the sections as the shoe opens to permit passing a weld, thereby preventing an excessive loss of material from the shoe. Plates 40 located at the ends of the reservoir 34 extend from the top thereof down into close proximity to the pipe and are attached to one section of the reservoir wall and overlap the abutting section. If desired, the free end of these plates 40 may be bevelled, as indicated at 42 so that they will cut through the material in the reservoir as the shoe closes. Plates 41 are fixed upon rings 4 and 5 on one side of the abutting ends of the sections thereof and overlap the other sections. These plates extend from the outer wall 6 of the shoe into close proximity of the pipe. Each plate 41 is fixed to one section and overlaps the adjacent section and the free ends of the plates are bevelled as are plates 40 to cut through the material as the shoe is being closed. By this arrangement, it is assured that the coating material in the shoe will completely surround the pipe at all times and a weld passing through the shoe will be coated with the material.

Preferably the shoe sections are formed so that the adjacent ends abut tightly together when the shoe is set to apply a minimum thickness coating on the pipe. When the shoe is adjusted for applying a thicker coating, the ends will be spaced apart slightly and the plates 40 and 41 serve to prevent excessive loss of coating material from the shoe.

Whenever it is necessary to stop the relative movement of the pipe and shoe, as will be the case frequently to permit replenishing the supply of wrapping material to the machine, as well as for other causes, the shoe may be dropped away from the pipe and, if desired, the pump may be stopped without impeding the work. When things are in readiness to resume operations, the pump is started and if sufficient hot material has been pumped through the pipe 33 to be sure that the same is free of obstruction, the shoe may be

elevated into engagement with the pipe and work resumed.

The shoe of the present invention is possessed of many advantages. Through its operation of feeding coating material from the bottom of a tank upwardly through the shoe under pressure generated by the pump, holiday free coatings may be applied to the pipe even though the material used contains solvents which are vaporized in whole or in part at the temperatures employed in the process. Air trapped in pits in the pipe is scrubbed out of the pits and carried out of the shoe with the excess material. Excess material returning to the tank will entrap a certain amount of air which, being lighter than the material, escapes therefrom long before the material again enters the circulatory system. The shoe may be readily lowered from the pipe when it is necessary to clear an obstruction or when it is necessary to shut down the machine and the danger of freezing the shoe on the pipe by the solidification of coating material therein is eliminated.

While I have chosen to show my invention by illustrating and describing a preferred embodiment of it, I have done so by way of example only, as there are many modifications and adaptations which can be made by one skilled in the art within the teachings of the invention.

Having thus complied with the statutes and shown and described a preferred embodiment of my invention, what I consider new and desire to have protected by Letters Patent is pointed out in the appended claims.

What is claimed is:

1. In a machine for applying coating material to a pipe during a relative movement of the machine and pipe, a generally cylindrical shoe encircling the pipe, a supply line leading into the bottom of said shoe, means for forcing coating material through said line and shoe and around said pipe, and overflow means at the top of said shoe for permitting excess material to flow out of said shoe and over the outside thereof.

2. In a machine for applying coating material to a pipe during a relative movement of the machine and pipe, a tank disposed beneath the pipe that is to be coated and containing a supply of coating material, a shoe, means for supporting said shoe above said tank in engagement with the pipe, means for supplying gas free coating material to said shoe, comprising, a pump submerged in the coating material and a feed pipe leading out of the pump and into the bottom of said shoe through which the pump forces material upwardly through the shoe and out of the top thereof.

3. In a machine for applying coating material to a pipe during a relative movement of the machine and pipe, a tank disposed beneath the pipe that is to be coated and containing a supply of coating material, a shoe, means for supporting said shoe above said tank in engagement with the pipe, means for supplying gas free coating material to said shoe, comprising, a pump submerged in the coating material, a feed pipe leading out of the pump and into the bottom of said shoe through which the pump forces material upwardly through the shoe and out of the top thereof, and baffle means guarding said pump from coating material dropping from said pump into said supply of coating material.

4. In a machine for applying coating material to pipes and the like during a relative movement of the machine and pipe, a frame disposed above the pipe that is being coated, a shoe encircling said pipe, a tank disposed beneath the pipe, a shaft on said frame, a pair of bell crank levers on said shaft, link means connecting said levers to said shoe to support the shoe on the frame, means connected between the shoe and frame for steadying the shoe with respect to the frame during the relative movement of the machine and pipe, a pump in said tank, and flexible pipe means connecting the pump to the bottom of the shoe to permit the pump to force coating material from the tank upwardly through the shoe and around the pipe that is being coated.

5. In a machine for applying coating material to pipes and the like during a relative movement of the machine and pipe, a frame disposed above the pipe that is being coated, a tank below the pipe, a coating shoe suspended from said frame and encircling the pipe, a baffle in said tank extending from the top of the same into juxtaposition to the bottom and dividing the tank into two compartments, a pump in one of said compartments, and a flexible tubing extending from said pump to the bottom of said shoe to conduct coating material from the tank to and through the shoe, said shoe being suspended over the second one of said tank compartments so that material dropping from the shoe into the tank falls into said second compartment.

6. In a machine for applying coating material to a pipe during a relative movement of the machine and pipe, a generally cylindrical shoe encircling the pipe, a supply line leading into the bottom of said shoe, means for forcing coating material through said line and shoe and around said pipe, means engaging the pipe and shoe for centering the shoe on the pipe to form a coating of uniform thickness around the pipe, and overflow means at the top of said shoe for permitting excess material to flow out of said shoe and over the outside thereof.

7. In a machine for applying coating material to pipes and the like, a frame, a coating shoe comprising a plurality of sections hinged together to form a generally cylindrical member through which the pipe that is being coated extends coaxially, a resilient link attached to each of two of said shoe sections extending toward said frame, means on the frame engaging said links to support the shoe with respect thereto, said means including over-center levers operable to lower the shoe to permit the same to open and fall away from the pipe, a flexible pipe leading into the bottom of the shoe, means including a pump for forcing a coating material through said pipe and shoe and around the pipe, and overflow means on the top of the shoe for directing excess coating material flowing out of the shoe therethrough over the outside of the shoe.

8. In a coating machine, a shoe encircling the pipe that is to be coated, and adapted to move with respect thereto, an end wall projecting radially inwardly from one end of said shoe and slidably engaging the pipe, an end wall projecting radially inwardly from the other end of said shoe and terminating on a circle spaced from the outer surface of the pipe a distance equal to the thickness of the coating to be applied thereto, a plurality of spacing means projecting through said shoe between said end walls and engaging said pipe to space said latter end wall uniformly therefrom, a tank containing coating material that is to be applied to the pipe, means including a pump for feeding said material into the bot-

tom of said shoe, a funnel projecting upwardly from said shoe, and a weir formed in each side of said funnel to permit excess coating material to flow from said shoe over the outside thereof and to return to said tank.

9. In a machine for applying coating material to a pipe during a relative movement of the machine and pipe, a generally cylindrical shoe encircling the pipe, a supply line leading into the bottom of said shoe, means for forcing coating material through said line into said shoe, means for directing said material upwardly through said shoe and around the pipe, and overflow means at the top of said shoe for permitting excess material to flow out of and over the outside of said shoe.

10. A shoe for coating pipe comprising, a plurality of segmental members, means yieldingly holding said members together to form a generally cylindrical member which surrounds the pipe, means for spacing the shoe concentrically on the pipe, means for feeding coating material into the shoe at a point beneath the pipe, means for directing said material upwardly through the shoe and around the pipe, and overflow means for permitting excess material to escape from the shoe at the top thereof.

11. A shoe for coating pipe comprising a plurality of segmental members, hinge means yieldingly holding said members together to form a generally cylindrical member which surrounds the pipe, upwardly extending flange members on one end of said segmental members engaging the pipe to block off that end of the shoe, inwardly extending flange members on the other end of said segmental members terminating in juxtaposition to the pipe, means for spacing said latter members at uniform distances from the pipe, a nipple through which coating material is fed into the shoe at a point beneath the bottom of the pipe, baffle means in the shoe for causing said material to flow upwardly through the shoe and around the pipe, and overflow means for permitting excess material to escape from the shoe at the top thereof.

12. A shoe for coating pipe, comprising, three sections which are registered together to form a generally cylindrical body which encircles the pipe, hinge means connecting said sections together, a flexible tube connected to and leading through the bottom one of said sections into the shoe, means on the ends of said shoe extending into juxtaposition to the pipe for confining coating material in the shoe, overflow means leading out of the top of the shoe, and spacing means engaging the pipe and shoe for centering the shoe coaxially of the pipe.

13. A coating shoe comprising, three sections which together form a generally cylindrical body, hinge means swingly connecting two of said sections to the third, a nipple depending from said third section to receive a pipe through which coating material is supplied to the shoe, end walls projecting radially inwardly to form flanges which assist in confining coating material in the shoe, wall means projecting outwardly from each of said first and second sections, said wall means forming a reservoir extending upwardly from the shoe through which excess coating material may flow and spill over the outside face of the shoe, means projecting outwardly from said first and second sections to receive means for supporting and steadying the shoe, and spacing means extending inwardly from said sections for centering the shoe coaxially with a pipe.

REMMEL E. HENRY.