Nov. 14, 1967 H. P. DAHLGREN 3,352,317

DAMPENING FLUID COOLING AND CIRCULATING APPARATUS FOR LITHOGRAPHIC OFFSET PRESS DAMPENING DEVICE

Filed Dec. 9, 1964 2 Sheets-Sheet 1

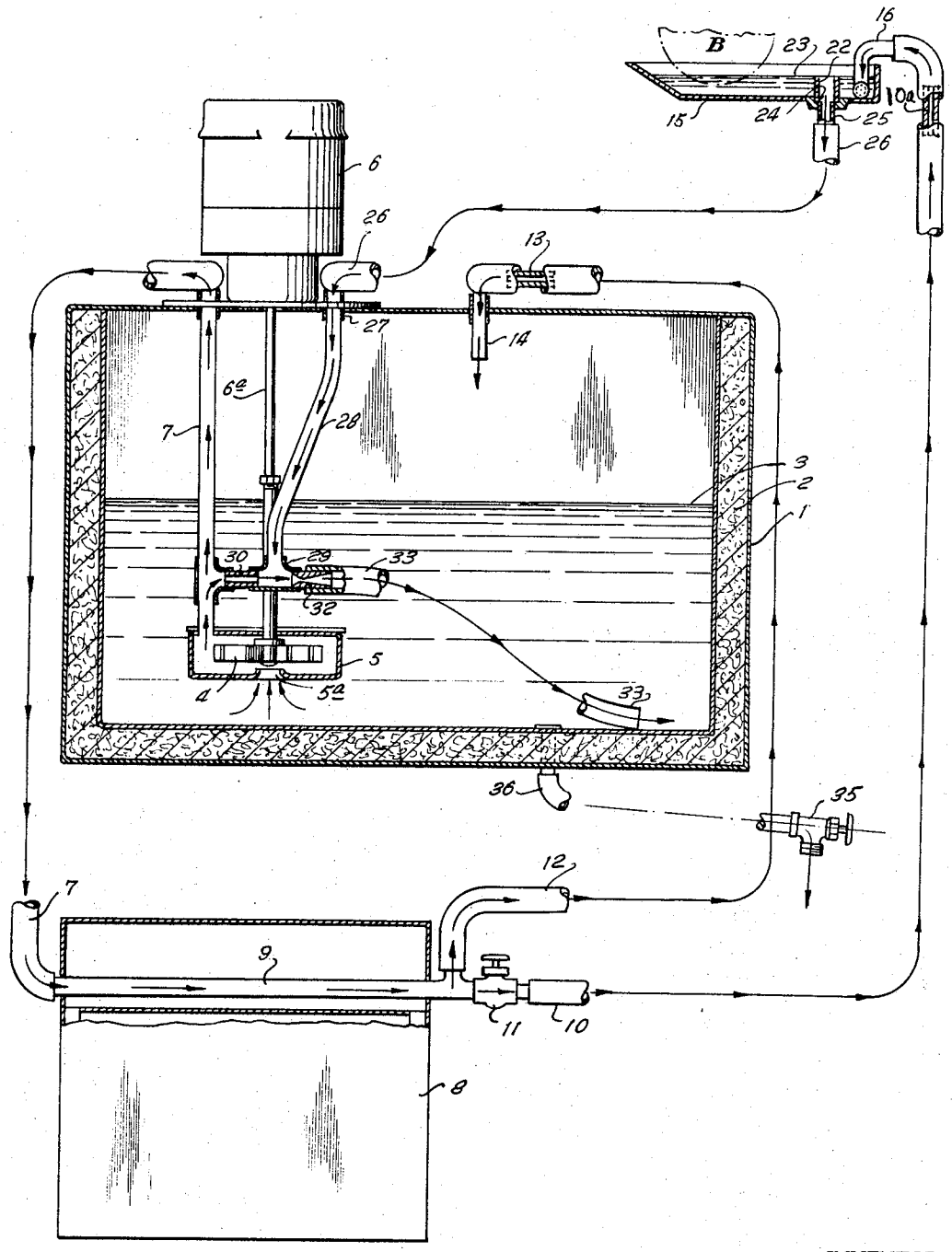

Fig. I

INVENTOR

Harold P. Dahlgren

BY Howard E. Moore

ATTORNEY

Nov. 14, 1967 H. P. DAHLGREN 3,352,317

DAMPENING FLUID COOLING AND CIRCULATING APPARATUS FOR LITHOGRAPHIC OFFSET PRESS DAMPENING DEVICE

Filed Dec. 9, 1964 2 Sheets-Sheet 2

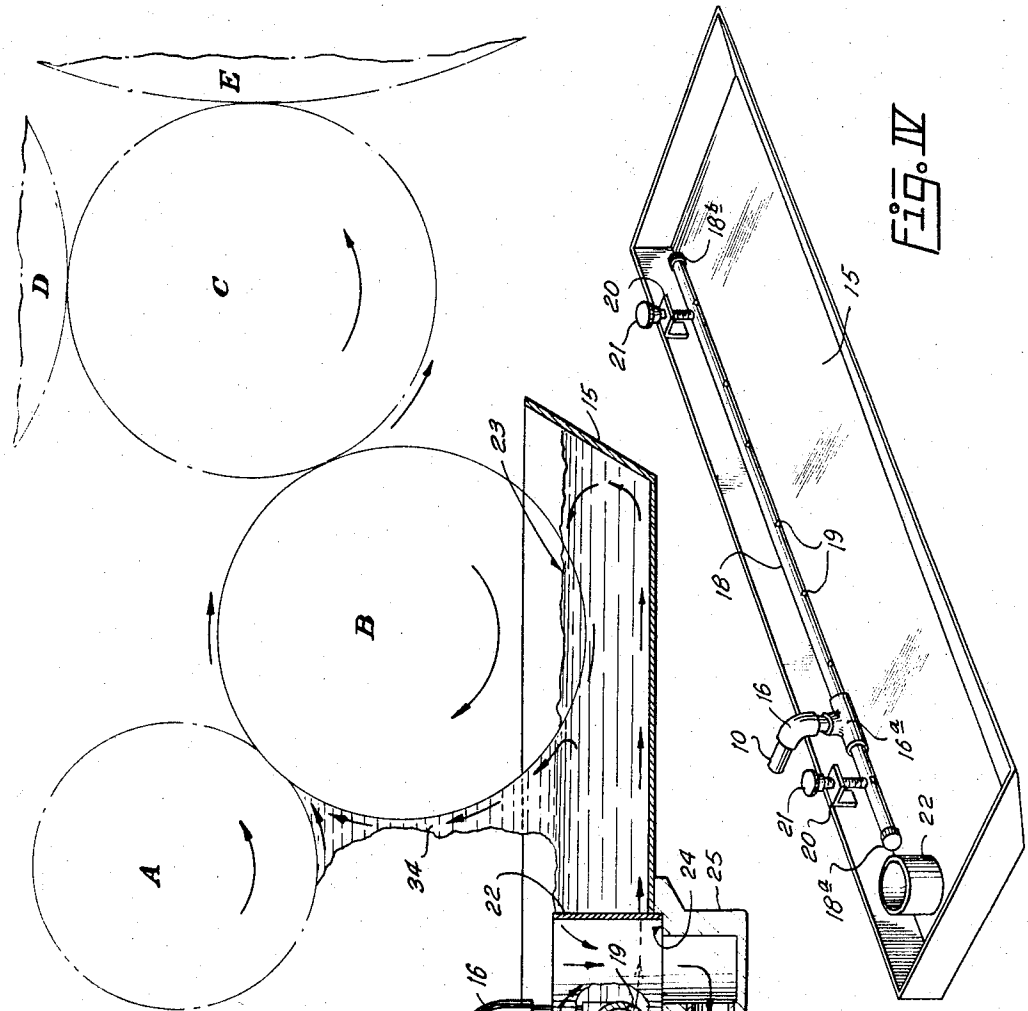

Fig. II

Fig. IV

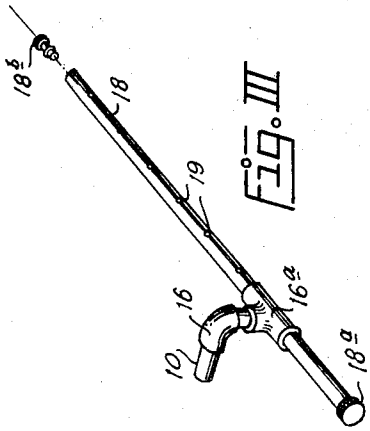

Fig. III

INVENTOR

Harold P. Dahlgren

BY Howard E. Moore

ATTORNEY

United States Patent Office

3,352,317

Patented Nov. 14, 1967

3,352,317

DAMPENING FLUID COOLING AND CIRCULATING APPARATUS FOR LITHOGRAPHIC OFFSET PRESS DAMPENING DEVICE

Harold P. Dahlgren, Dallas, Tex., assignor to Dahlgren Manufacturing Company, Inc., Dallas, Tex., a corporation of Texas

Filed Dec. 9, 1964, Ser. No. 417,183
3 Claims. (Cl. 137—339)

This invention is concerned with the application of dampening fluid to the plate on a lithographic offset printing press and is particularly concerned with apparatus for circulating and maintaining a desired optimum temperature of the dampening fluid.

In a dampening device for transferring dampening fluid to the plate of a lithographic offset printing press it has been customary practice to place the dampening fluid in a pan or "fountain." A pan roller is rotated through the fluid in the fountain to pick up the dampening fluid which is transferred, either by a ductor roller which oscillates between the pan roller and a transfer roller which in turn runs in contact with dampening rollers running in contact with the plate, or to a specially prepared transfer roller, as shown in my co-pending application for patent, Ser. No. 26,035, now Patent No. 3,168,037, which runs in contact with an ink form roller to transfer the dampening fluid to the plate.

The dampening fluid usually consists of several chemical compositions mixed with water, and as disclosed in my said co-pending application, alcohol is mixed with water to provide the dampening fluid.

It has been found that when a new batch of dampening fluid is added to the fountain same does not readily mix with the dampening fluid therein. The added dampening fluid changes the proportions of the ingredients of the dampening fluid, which changes the chemistry thereof, and will therefore affect the quality of the printing produced by the press until such dampening fluid has become thoroughly mixed, which usually requires a considerable length of time.

It has also been found that variations in the temperature of the dampening fluid will affect the quality of printing.

For instance, if the temperature of the dampening fluid solution is too warm emulsifications of the dampening fluid with ink is increased and the oxidation of the plate contacted by the dampening fluid is increased. It has been found from experience that the temperature of the dampening fluid should not exceed more than about 75° F.

In the type of plate dampening device shown in my said co-pending application, wherein a resilient metering roller, a specially prepared, polished, hydrophilic chrome roller and an ink coated form roller are run in metering relationship, with one of said metering or chrome rollers being rotated in the dampening fluid container, it has been found that a volatile, watery type of alcohol is a desirable ingredient of the dampening fluid.

If the temperature of the dampening fluid is allowed to rise above a certain maximum, the alcohol will evaporate more rapidly, requiring the replenishment of the alcohol at more frequent intervals and reducing the effectiveness thereof.

It is, therefore, a primary object of this invention to provide a dampening fluid storage and circulation system which diffuses and mixes the dampening fluid before it reaches the dampening fluid pan so that the addition of dampening fluid to the reservoir will not materially affect the mixture and distribution of the elements therein to such an extent that it would affect the quality of the printing.

Another object of the invention is to provide a dampening fluid storage and circulation system wherein the dampening fluid is circulated through a refrigeration unit, to maintain the temperature of the dampening fluid at a predetermined optimum value.

Still another object of the invention is to provide a dampening fluid storage and circulation system wherein the dampening fluid is drawn back into the reservoir for the dampening fluid by venturi action supplied by discharge pressure from the circulating pump, so that the dampening fluid will flow from the dampening fluid pan back into the reservoir even though the dampening fluid pan is located below the level of the liquid in the reservoir.

Still another object of the invention is to provide a dampening fluid circulation system wherein the dampening fluid is deposited in the dampening fluid pan through a horizontally disposed perforated diffuser pipe, to assure that same is properly mixed and agitated to maintain the chemical diffusion and balance thereof, and wherein the level of fluid in the dampening fluid pan is maintained by a removable drain pipe which may be removed to allow the dampening fluid to drain from the pan back into the reservoir therefor.

Other and further objects of the invention will become apparent upon reading the detailed specification hereinafter following and by referring to the drawings annexed hereto.

In the drawings:

FIGURE I is a partially diagrammatic cross-sectional elevational view of the dampening fluid circulating system to which this invention is addressed;

FIGURE II is an enlarged transverse sectional view of the dampening fluid fountain showing the diffuser pipe and the removable water level and drain pipe;

FIGURE III is a front perspective view of the diffuser pipe; and

FIGURE IV is a top perspective view of the dampening fluid fountain, with the diffuser pipe mounted therein.

Numeral references are employed to indicate the various parts shown in the drawings and like numerals indicate like parts throughout the various figures of the drawings.

As shown in FIGURE II the metering roller A has a smooth resilient surface thereon, which is run in surface pressure relationship to the surface of the transfer roller B.

Transfer roller B is preferably a smoothly finished, hard surfaced hydrophilic roller such as that disclosed in my aforesaid co-pending application.

The surface of transfer roller B is run in surface pressure relationship to the surface of a resilient ink carrying roller C which in turn runs in surface contact with the printing plate E. Ink is supplied to the roller C by a conventional longitudinally oscillating vibrator roller D. The aforesaid rollers and the relationship thereof are as disclosed in my said co-pending application which is for illustrated purposes only. It will be understood that other types of dampening devices, such as that wherein the dampening fluid is transferred from the water pan roller to the dampening rollers through an oscillating ductor roller could be employed with the dampening fluid circulating and temperature regulation device herein disclosed.

A dampening fluid tank or reservoir **1** is provided having heat insulation **2** in the walls thereof.

A quantity of dampening fluid **3** is disposed in the reservoir **1**. The dampening fluid **3** may be conventional type of dampening fluid, which usually consists of a mixture of chemical ingredients and water, or it may be water and other chemical ingredients mixed with alcohol, as it is used with the dampening device disclosed in my said co-pending application.

The level of the dampening fluid **3** is maintained above the impeller **4** of the pump **5**. The impeller **4** is rotated through a shaft **6***a* by an electric motor **6** mounted on the top of the reservoir **1**. The impeller **4** picks up dampening fluid from the container **1** through the intake opening **5***a* in the lower wall of the pump housing.

The dampening fluid is forced through the discharge line **7** and is passed through a refrigeration unit **8** which has the usual compressor, condenser, receiver, filter and dryer, expansion valve and evaporator coils therein. The discharge line **7** is connected to a pipe **9** which passes adjacent to the evaporator coil of the refrigeration unit, and as the dampening fluid passes therethrough, it is cooled. The temperature of the refrigeration unit may be maintained by a suitable thermostat control (not shown).

A portion of the refrigerated dampening fluid is passed from the pipe **9** through a hand operated valve **11** and a supply line **10** to the dispenser pipe **18** which is disposed in the dampening fluid pan or fountain **15**.

A branch line **12** communicates with the upper part of the reservoir **1** through a discharge nipple **14**. A restrictor nipple **13** is inserted in the branch line **12**, which not only provides for jetting and mixture of the dampening fluid as it is deposited into the reservoir **1**, but provides a back pressure on the discharge pipe **7** for the purpose hereinafter mentioned. The fountain supply line **10** is connected to the perforated dispenser pipe **18** by an elbow joint **16** which is in turn connected to a T joint **16***a* to which the separate branches of the dispenser pipe **18** are connected.

The perforated diffuser pipe **18** extends along the inner wall of the dampening fluid container **15** and has spaced perforations **19** in the wall thereof through which dampening fluid may be dispensed. The ends of the diffuser pipe **18** are closed by removable plugs **18***a* and **18***b* whereby the pipe may be cleaned out.

The diffuser pipe **18** is supported and held down by adjustment screws **21** which pass through brackets **20** secured to the inner wall of the fountain **15**.

A removable drain pipe **22** is seated on a shoulder **24** provided about the passage **25** leading through the lower wall of the dampening fluid fountain **15**. The removable stand pipe **22** maintains the level of the dampening fluid in the pan, indicated at **23**. The drain pipe **22** may be removed to allow the dampening fluid **3** to quickly drain back into the reservoir **1**.

A return hose **26** is attached to the outlet drain nipple **25** through which dampening fluid may return from the pan **15** to the reservoir **1**. The hose **26** communicates with a drain back pipe **28** in the reservoir **1** through a suitable nipple **27** passing through the upper wall of the reservoir **1**.

The drain back pipe **28** is connected in communication with a T-fitting **29**.

A restrictor nozzle **30** is connected between an outlet from the discharge conduit **7** and the T-coupling **29**.

A venturi **32** is connected to an outlet of the T-coupling **29** opposite the restrictor nozzle **30**. A venturi discharge line **33** is connected to the opposite end of the venturi **32** and terminates at the bottom of the reservoir **1**.

The operation and function of the device hereinbefore described is as follows:

The reservoir **1** is filled with sufficient dampening fluid **3** to maintain a level above the pump **5** and the venturi outlet **33**.

The dampening fluid may be any known type of dampening fluid, comprised of a mixture of chemical ingredients and water or a mixture of water and alcohol, as employed with the dampening device disclosed in my aforesaid co-pending application.

The motor **6** is energized to rotate the impeller **4** which forces dampening fluid through the discharge conduit **7** and pipe **9**, passing through the refrigeration unit **8**; where the dampening fluid is maintained to a predetermined maximum temperature. A portion of dampening fluid is forced through the conduit **12** and back to the reservoir **1**. A portion of the dampening fluid is passed through the conduit **10** to the diffuser pipe **18**, where it is jetted through the perforations **19** into the dampening fluid pan **15**.

It will be observed at this point that the valve **11** may be closed to cause all circulated dampening fluid to pass back to the reservoir **1** through the line **12**. This is provided so that the temperature of the dampening fluid in the reservoir **1** may be maintained at a predetermined maximum while the dampening device which draws fluid from the supply pan **15** is not in operation. Therefore, when the press is started and the dampener is placed in operation, the dampening fluid will be at the correct temperature for optimum operation. It is also desirable that a portion of the dampening fluid be circulated back to the reservoir **1** even when the valve **11** is open, so that temperature of the dampening fluid in the reservoir **1** may be maintained at a constant value while the dampener is in operation and while the fluid is being circulated through the dampening fluid pan **15**.

The dampening fluid is passed through the perforations **19** and deposited in the supply pan **15**. The supply pan **15** is filled to a level where the dampening fluid runs over the overflow drain pipe **22** and back to the supply reservoir **1** through the hose **26** and drain back conduit **28**. It is noted that the dampening fluid flowing back from the dampening fluid supply pan **15** passes through a venturi **32** which lowers the pressure on the outlet side thereof, thereby creating a suction which draws the dampening fluid from the dampening fluid pan **15**.

It will further be observed that flow restrictors **13** and **10***a* are placed in the lines **12** and **10** respectively, which with the restricted perforations **19** in the diffuser pipe **18** cause a back pressure on the fluid discharge line **7** and thereby causes a portion of the fluid supplied thereto by pump **5** to be jetted through the restricted passage **30** directly into the venturi **32**, thereby increasing the velocity of the fluid passing through the venturi **32** and increasing the suction created across the venturi. This assures that fluid overflowing the drain pipe **32** will be drawn back into the reservoir **1** even though the dampener fluid pan **15** may be situated below the level of the dampening fluid **3** in the reservoir **1**. This is important because in some installations the dampening fluid pan is located below the level of the dampening fluid **3** in the reservoir **1**, but nevertheless, the dampening fluid is drawn back into the dampening fluid reservoir **1** from pan **15** by means of the venturi **32** in conjunction with restricted jet **30**.

Should it be desired to drain the fluid from dampening fluid pan **15** back into the reservoir **1**, such may be quickly done by removing the drain pipe **22**, thus allowing the dampening fluid to flow back to the dampening fluid reservoir **1** through the return conduits **26** and **28**.

By adjusting the opening through **11**, the rate of supply of dampening fluid into the pan **15** may be regulated. The transfer roller B is rotated in the dampening fluid **23** in the supply pan **15** and is picked up on the surface thereof and carried to the nip between the transfer roller B and the resilient metering roller A.

The transfer roller B is preferably of the type disclosed in my aforesaid co-pending application which has a hard smoothly finished hydrophilic surface thereon. The pressure relationship between the metering roller A and the transfer roller B may be adjusted to meter fluid between the contacting surfaces thereof and excess dampening fluid which does not pass therebetween, flows back into the supply pan **15** by gravity as indicated at **34**. Thus, a regulated supply of dampening fluid is passed between the contacting surfaces of the rollers A and B. The metered film of dampening fluid on the surface of the roller B, is rotated in contact with an ink carrying resilient roller C and the dampening fluid adheres to the surface of the

film of ink on the ink carrying form roller and is transferred to the plate as the roller C rotates in contact therewith. Ink is supplied to the form roller C by an ink supply vibrator roller D which rotates in contact therewith.

It will be understood that this dampening fluid cooling and circulating device and system could be used not only with the types of dampeners shown in my said co-pending application, but could be used with conventional dampeners wherein dampening fluid is transferred to the transfer roller by a ductor roller and from the transfer roller to the plate through absorbent molleton type rollers. It is desirable and advantageous to maintain the chemical balance of dampening fluid as well as regulate the temperature of the dampening fluid in the use of such conventional dampener devices.

Should it be desired to drain the dampening fluid **3** from the reservoir **1**, same may be done by opening the drain valve **35** attached to drain hose **36**, which in turn communicates with the reservoir **1** through a nipple extending through the lower wall of the reservoir.

It will be seen that I have provided a dampening fluid cooling and circulating system, which mixes, diffuses, and maintains the chemical consistency of the dampening fluid and regulates the maximum temperature thereof as it is circulated through the system, and which provides for the return of the dampening fluid to the reservoir by suction, without mechanical force applied for such purpose, even with the dampening fluid supply pan located below the level of the fluid in the reservoir.

It will be understood that other and further embodiments of my invention may be devised without departing from the spirit and scope of the appended claims.

Having described my invention I claim:

1. In a device for circulating dampening fluid in a lithographic printing press, a reservoir for dampening fluid; a pump disposed below the level of fluid in the reservoir; a discharge conduit from the pump through the wall of the reservoir; a refrigeration unit; an elongated dampening fluid container; conduit means connected to the discharge conduit passing through the refrigeration unit and extending to a point adjacent the container; a dispersal conduit having spaced perforations through the wall thereof attached to the conduit means and being disposed in the container; a return conduit communicating with the container and the reservoir; means to maintain a predetermined level of fluid in the container; a venturi connected in the return conduit below the level of the fluid in the reservoir; a restricted passage between the discharge conduit and the return conduit, said restricted passage being arranged to discharge fluid directly into the entry end of the venturi; and flow restriction means between the pump and the dispersal conduit to cause back pressure in the discharge conduit.

2. The combination called for in claim **1** with the addition of a branch conduit attached in communication with the conduit means after it passes through the refrigeration unit and with the reservoir; and valve means in the conduit means between the branch conduit and the dispersal conduit to permit the dampening fluid to be circulated through the reservoir and refrigeration unit while flow thereof to the dispersal conduit is closed off by the valve means.

3. The combination called for in claim **2** with the addition of flow restriction means in the branch conduit.

References Cited

UNITED STATES PATENTS

1,262,707	4/1918	Smith	101—366
1,969,154	8/1934	Schultz	101—148
1,989,375	1/1935	Meyercord	101—177
2,130,659	9/1938	Wedemeyer	101—366
2,368,500	1/1945	Taylor et al.	101—350
2,604,848	7/1952	Muller	101—147
2,728,690	12/1955	Saeman	101—350 X
3,045,592	7/1962	Shearer et al.	101—350

M. CARY NELSON, *Primary Examiner.*

S. SCOTT, *Assistant Examiner.*