March 28, 1961 F. E. ROMMEL 2,977,513

MOUNTING OF ARMATURES OF POLARISED ELECTROMAGNETIC RELAYS

Filed Dec. 9, 1957 4 Sheets-Sheet 1

Fig. 1.

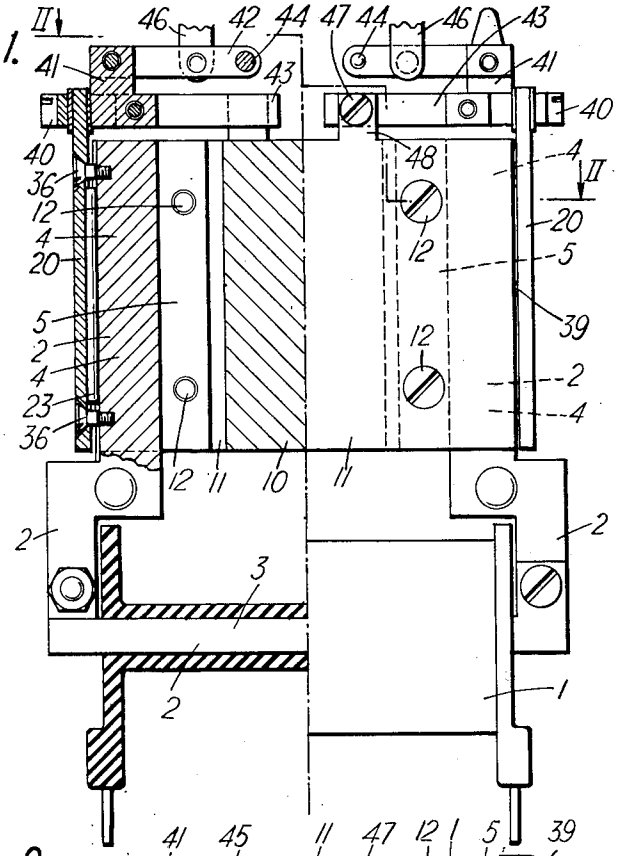

Fig. 2

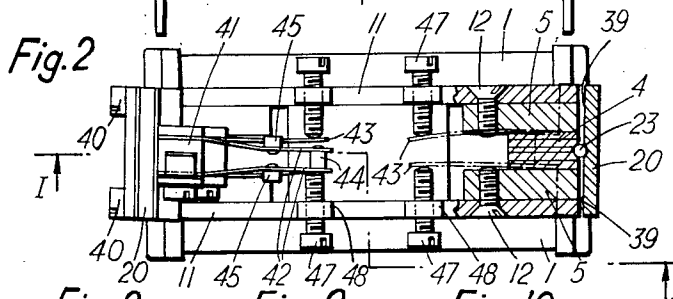

Fig. 8.

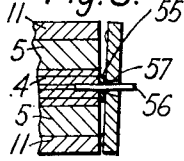

Fig. 9.

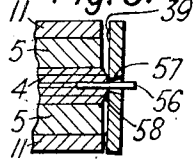

Fig. 10.

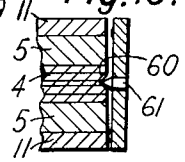

Fig. 11.

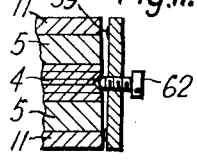

Inventor
Frederick E. Rommel
By Ralph B. Stewart
Attorney

March 28, 1961 F. E. ROMMEL 2,977,513

MOUNTING OF ARMATURES OF POLARISED ELECTROMAGNETIC RELAYS

Filed Dec. 9, 1957 4 Sheets-Sheet 2

Fig. 3.

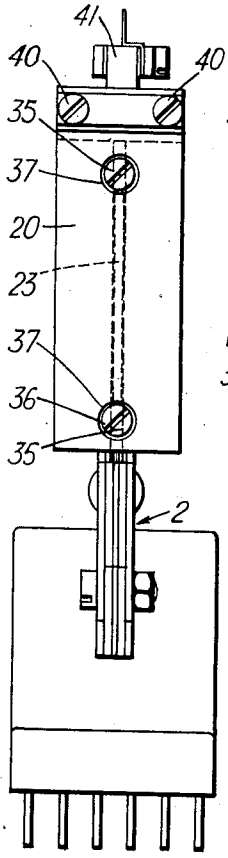

Fig. 4.

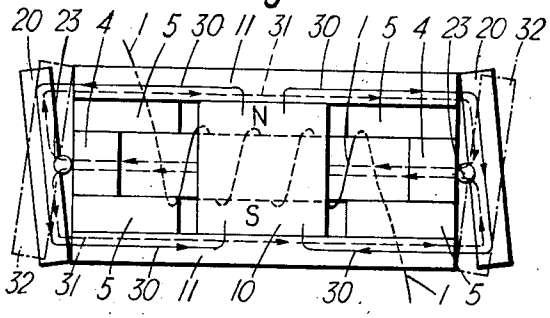

Fig. 5.

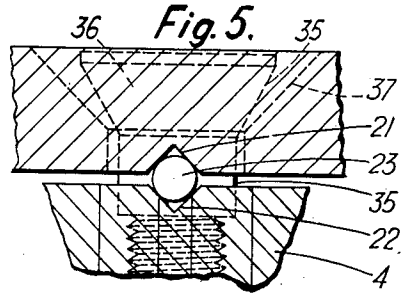

Fig. 6.

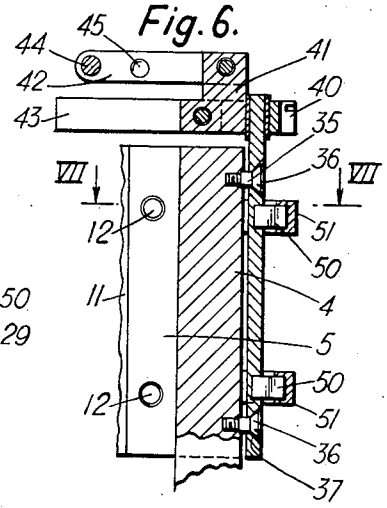

Fig. 7.

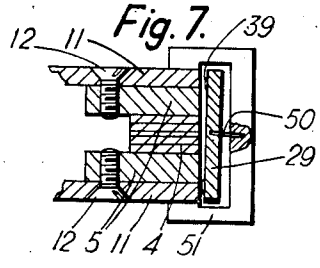

Inventor
Frederick E. Rommel
By Ralph B. Stewart
Attorney

March 28, 1961 F. E. ROMMEL 2,977,513

MOUNTING OF ARMATURES OF POLARISED ELECTROMAGNETIC RELAYS

Filed Dec. 9, 1957

4 Sheets-Sheet 3

Fig. 12.

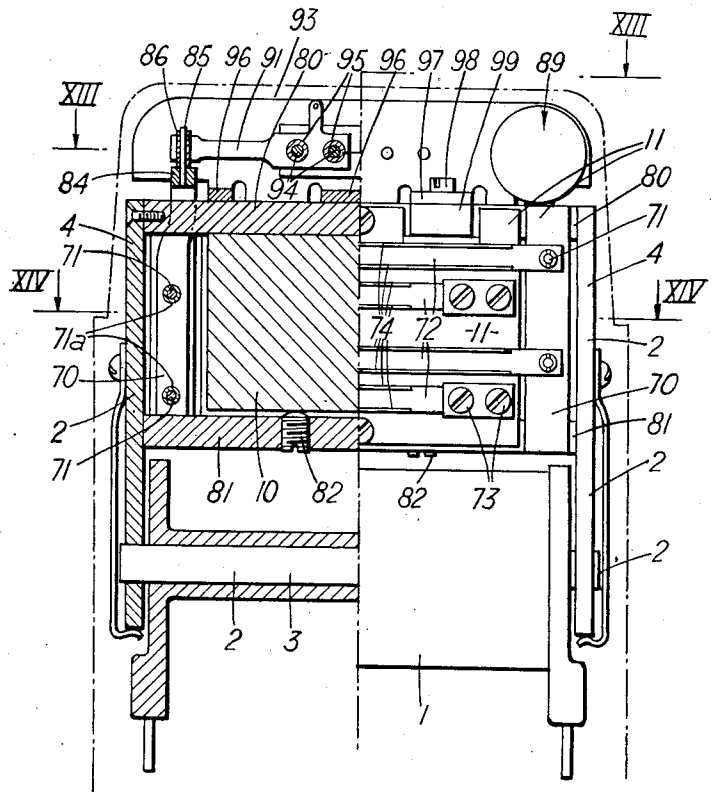

Inventor
Frederick E. Rommel

By Ralph B. Stewart
Attorney

March 28, 1961 F. E. ROMMEL 2,977,513

MOUNTING OF ARMATURES OF POLARISED ELECTROMAGNETIC RELAYS

Filed Dec. 9, 1957

4 Sheets-Sheet 4

Fig. 13.

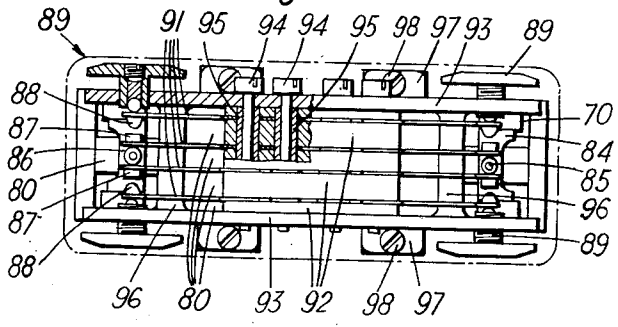

Fig. 14.

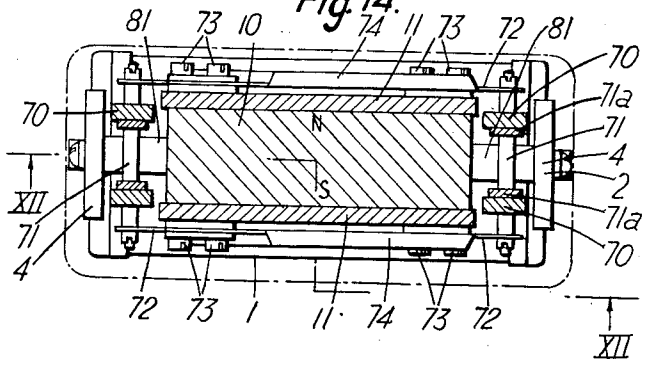

Fig. 15.

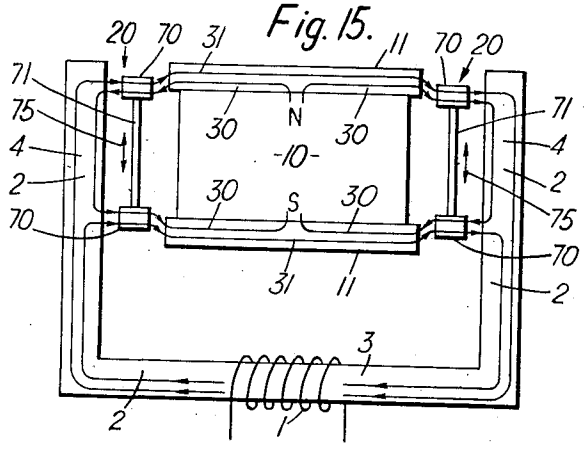

Inventor

Frederick E. Rommel

By Ralph B. Stewart

Attorney

United States Patent Office 2,977,513 Patented Mar. 28, 1961

2,977,513

MOUNTING OF ARMATURES OF POLARISED ELECTROMAGNETIC RELAYS

Frederick Emil Rommel, West Dulwich, London, England, assignor to Telephone Manufacturing Company Limited, London, England, a British company

Filed Dec. 9, 1957, Ser. No. 701,584

15 Claims. (Cl. 317—174)

This invention relates to polarised electromagnetic relays, and according to this invention two armatures, not mechanically coupled to one another, are each arranged to conduct signals flux between a corresponding end of the stationary magnetic structure linked with the signals winding, and parallel paths passing through two magnetically soft members arranged at the opposite poles of the polarising magnet of the relay. In a relay constructed according to this invention, for each armature, the signals flux near one of the members is in the same direction as the polarising flux provided by the polarising magnet, whilst near the other member it is in the opposite direction, and as a consequence there is a resultant flux acting to move each armature. As a result, the armatures are caused to move together to operate corresponding sets of contacts. Since there is no mechanical coupling but only an electromagnetic coupling between the armatures, they are both able to move sufficiently far to close both sets of contacts, even if one set has become worn in use.

Preferably, for each armature, the corresponding end of the structure lies on the same side of the armature as the two magnetically soft members and lies between them. This enables each armature to be made without giving it a precise thickness for the air gaps of the relay across which the combined polarising and signals flux passes, all lie to one side of the armature and are not dependent upon its thickness but upon the way in which it is mounted. The arrangement of each armature in the way just indicated enables these so-called working air gaps to be set precisely in a number of different ways which all involve easy manufacturing processes. Thus, the said side of each armature may be made flat, as by a simple grinding operation, and the nearby surfaces of the two members and the corresponding end of the said structure may be made coplanar, again by a simple grinding operation for example. Each armature may then be mounted on the corresponding end of the structure so as to be capable of turning about an angle to increase the length of one working air gap and decrease that of the other. In one very simple mounting for this purpose, a flat shim is interposed between each armature and the corresponding end of the structure, and the armature is then capable of rocking about the opposite edges of this shim. With this mounting, the lengths of the working air gaps and thus the characteristics of the relay may be altered merely by replacing the shim by another of different thickness. In an alternative form of mounting, a roller or rollers are used instead of the shim and enable the armature to roll instead of rocking. The roller or rollers are located by recesses formed in the flat surfaces of the armature and the corresponding end of the structure. Again, the armature mounting may be provided by a pair of projections which extend between the armature and the corresponding end of the structure and serve as a pivotal support for the armature. Conveniently, these projections extend into recesses formed in the

end of the structure and are adjustably secured to the armature to enable the working air gaps to be varied.

In another form of mounting, each end of the said structure is not made coplanar with the coplanar surfaces of the two members facing the corresponding armature, but is instead rounded so as to provide for the armature a support over which the armature is capable of rolling.

The use of simple grinding operations for shaping the facing surfaces of each armature, the magnetically soft members, and the corresponding end of the said structure is not restricted to relays in which each end of the stationary magnetic structure lies on the same side of the corresponding armature as the two members do, but such operations may also be employed in relays in which each armature lies between the corresponding end of the said structure and the two magnetically soft members. In such a relay, each armature is conveniently mounted so as to change the degree of overlap between itself and these members on moving. Preferably such an armature is in the form of an open framework comprising two magnetically soft parts, each lying near one of the members, and a non-magnetic spacer or spacers connecting these two parts together, for such a framework may be made light to produce a sensitive relay.

In order that the invention may be more easily understood and readily carried into effect, two relays constructed according to this invention, together with several modifications, will now be described with reference to the accompanying drawings in which:

Figure 1 is a front elevation of the first relay, partly in section, and taken along the line I—I of Figure 2;

Figure 2 is a plan of this relay taken along the line II—II of Figure 1;

Figure 3 is a side elevation of the relay;

Figure 4 is a diagrammatic plan view showing the magnetic circuits of the relay;

Figure 5 is an enlarged horizontal section taken at the pivotal mounting of either of the two armatures of the relay;

Figure 6 is a front elevation showing a modified pivotal support for either armature;

Figure 7 is a plan view of the support taken along the line VII—VII of Figure 6;

Figures 8 to 11 are similar plan views of four other pivotal mountings for either armature;

Figure 12 is a front elevation of the second relay, partly in cross-section and taken along the line XII—XII of Figure 14;

Figure 13 is a plan view of the second relay, with part taken along the line XIII—XIII of Figure 12;

Figure 14 is a second plan view of the second relay, this time taken along the line XIV—XIV of Figure 12; and

Figure 15 is a diagrammatic view showing the magnetic circuits of the second relay.

In the first relay, the signals winding of the relay, indicated at **1**, is linked with a stationary magnetically-soft structure **2** which includes the core **3** of the winding and which presents two rectangularly-shaped, laminated ends **4**. Each of these ends **4** is sandwiched between a pair of rectangularly-shaped non-magnetic spacers **5**.

The polarising magnet of the relay, indicated at **10**, is provided at its opposite poles with two magnetically-soft members in the form of rectangularly-shaped plates **11** which extend beyond the vertical sides of the magnet **10**, and which are fixed to the spacers **5** by screws **12** (Figures 1 and 2). It will be realised that the magnet **10**, the plates **11**, the ends **4** and the spacers **5** constitute a robust structure which is easily made by simple grinding operations and which is easily assembled. In particular, the vertical surfaces remote from the magnet **10** on each

end 4, the nearby spacers 5 and the plates 11 can readily be made coplanar by a simple grinding operation.

A pair of magnetically-soft, rectangularly-shaped armatures 20 are provided which are not mechanically coupled to one another and which are arranged at opposite ends of the robust structure just mentioned. The inner side of each armature 20 is made flat, as by grinding, and is provided with a recess in the form of a vertical V-section groove 21 (see Figure 5) lying opposite another similar groove 22 formed in the end 4. A thin metal roller or wire 23 is located by the grooves 21 and 22 and serves as a pivotal support for the armature 20 which is capable of rolling over it. In a modified construction (not shown) the wire 23 is replaced by a pair of small ceramic balls each located by small, facing depressions in the armature 20 and the end 4.

Referring now to Figure 4, it can be seen that the polarising flux, which is indicated by the full lines 30, passes from the north pole of the magnet 10 into the upper plate 11, then through the two armatures 20 in parallel, and finally back to the south pole of the magnet through the lower plate 11. The signals flux, which is indicated by the dotted lines 31, is conducted by each armature 20 between the nearby end 4 and the parallel paths which this flux takes through the plates 11. When the signal in the signals winding 1 is such as to produce polarising flux in the direction indicated, the signals flux supplements the polarising flux at the working air gaps near the bottom end of the left-hand armature 20 and near the top end of the right-hand armature 20, whilst it reduces the polarising flux at the other working air gaps. As a consequence they both turn in an anti-clockwise direction as indicated in full lines in Figure 4. If the signal is reversed, the fluxes turn the armature in a clockwise direction as indicated in dotted lines at 32.

It will be realised that, whether or not a signal is being received, the polarising flux serves to pull both armatures 20 inwardly against their pivotal supports. Under normal conditions, the forces produced by the polarising flux are sufficient to keep the armatures in this position, but in order to prevent the armatures being pulled off their supports during rough treatment, a pair of screws 35 (see Figures 1, 3 and 5) are provided for each armature. These screws 35, which lie in apertures 37 in the armature, are screwed into the corresponding end 4 and have enlarged heads 36 which prevent the armature 20 from being pulled off but do not hinder its rolling movement since sufficient clearance is provided between them and the walls of the apertures 37 (see Figure 5).

A pair of non-magnetic studs 39 (see in particular Figure 2) are provided on each armature so as to prevent it from sticking in either of its two extreme positions.

At the top end of each armature 20 is rigidly attached by screws 40 a block 41 (see Figures 1 and 2) to which is secured two pairs of springs 42 and 43. The upper springs 42, which are secured together at one end by a stud 44, carry the moving contacts 45, of the relay, these being arranged to cooperate with static contacts carried on springs 46 which are mounted in the relay in any convenient way. The lower springs 43 are provided in order to provide a mechanical control for the armature 20. Each of these springs 43 is continuously in contact with the front face of a corresponding screw 47, which may be screwed in or out of a projection 48 on one of the plates 11. This enables the rest position of the armature 20 to be changed or enables the relay to be converted from a both-sides-stable relay to a centre-stable relay or vice-versa.

In the form of construction shown in Figures 6 and 7, the wire 23 is dispensed with and the armature is supported from its outer side by a pair of short springs 50, the outer ends of which are secured inside a U-shaped support 51 fixed to the plates 11.

Further modifications for the pivotal support of each armature are indicated in Figures 8 to 11. In Figure 8, a flat shim 55 is interposed between each armature 20 and the end 4 and the armature is capable of rocking about opposite edges of this shim 55. The armature is prevented from moving in unwanted directions by a pin 56 fitted into the end 4 and passing through an opening 57 in the armature. In Figure 9, the inner surface of the armature 20 is again flat, and the nearby facing surfaces of the two plates 11 and the non-magnetic spacers 5 are made coplanar, but here the nearby surface of the end 4 is rounded to produce a part-cylindrical surface 58 which constitutes a support over which the armature 20 is capable of rolling. The pin 56 and the opening 57 are again provided. In Figure 10, the nearby surfaces of the end 4 is again flat, but is now provided with a pair of conical recesses, one of which is shown at 60, into which fit pointed ends of projections 61 rigidly secured to the armature. In Figure 11, the projections 61 are in the form of screws 62, which enable the working air gaps between the armature 20 and the nearby plates 11 to be varied.

The second relay, illustrated in Figures 12 to 15, differs from the first mainly in that each end 4 of the structure 2 lies, not on the same side of the corresponding armature 20 as the two plates 11, but on the opposite side. A further difference is that each armature 20 is not a single member of magnetically-soft material, but is in the form of an open frame-work comprising two substantially rectangularly-shaped, magnetically-soft parts 70, each lying near one of the plates 11, and a pair of non-magnetic spacers in the form of two spindles 71 which connect the two parts 70 together but maintain them a fixed distance apart by their collars 71*a*. The outer ends of each spindle 71 are attached to the ends of a pair of long springs 72, the other ends of which are attached to the outer surfaces of the plates 11 by screws 73 (see Figure 12). Along their lengths, the springs 72 have their edges turned over as indicated at 74 so as to stiffen them and restrain them from bending. This ensures that each armature 20 moves in a substantially straight line indicated at 75 (Figure 15), and on doing so the degree of overlap between itself and the plates 11 changes.

Referring to this Figure 15, it will be realised that when no signal is being received, the polarising flux, indicated at 30, maintains each armature in a symmetrical position, but when a signal is received which produces the signals flux indicated at 31, this signals flux is conducted between each end 4 of the structure 2 and the parallel paths passing through the plates 11 by means of the corresponding armature 20 and the latter tends to move into the stronger field. As a consequence, the left-hand armature 20 moves downwardly, whilst the right-hand armature, which is not mechanically coupled to it, moves upwardly.

Referring now to the details of construction of the second relay, shown in Figures 12 to 14, a pair of non-magnetic bars 80, 81 extend across the relay between the two ends 4, and adjustable studs 82 are provided for pressing the magnet 10 into engagement with the lower surface of the upper bar 80. The two parts 70 of each armature 20 extend up on either side of the bar 80 and are connected together at their upper ends by a cross-bar 84 bearing a pin 85. This pin 85 is surrounded by an insulating sleeve 86 which lies between and operates the moving contacts 87 of the relay. These contacts 87 cooperate with static contacts 88 and contact chatter between them is damped by a damping device indicated at 89 and described in more detail in my copending American specification No. 589,169.

Each contact 87, 88 is carried at the end of a corresponding leaf-spring 91, the other end of which is sandwiched between insulating blocks indicated at 92 and held in place between two plates 93 by means of bolts 94 passing through insulating sleeves 95. The plates 93, into which the damping devices 89 are screwed, are joined together by bars 96 which rest on the bar 80. These

plates 93 are provided with brackets 97 which are secured by screws 98 to projections 99 formed on the bar 80.

I claim:

1. A polarised electromagnetic relay comprising a signals winding, a stationary magnetic structure linked with said winding and presenting a pair of ends at which any signals flux appears, a pair of armatures without mechanical coupling between them, each of said armatures being arranged at a corresponding end of said structure, two separate magnetically soft members arranged with respect to the armatures to provide magnetically parallel paths for the flow of signals flux which passes through the armatures in series, one side of each armature confronting both of the said magnetically soft members whereby signals flux both enters and leaves the armature at the said one side, and a polarising magnet having its opposite poles adjacent said two magnetically soft members respectively to conduct polarizing flux from one pole to the other through two parallel paths passing through said two armatures respectively.

2. A relay according to claim 1 in which the magnetically soft members have co-planar surfaces, the said one side of each armature confronting the co-planar surfaces.

3. A relay according to claim 2, and also comprising a plurality of non-magnetic spacers separating said members from said ends, said spacers having their surfaces nearest each of said armatures made coplanar with the coplanar surfaces of said members.

4. A relay according to claim 3, said magnet, said members, said ends and said spacers all being of rectangular shape and being secured to one another with their flat faces in engagement to produce a composite rectangular structure.

5. A relay according to claim 4, said armatures being arranged at opposite ends of said rectangular structure.

6. A relay according to claim 2, said one side of each armature being flat.

7. A relay according to claim 6 in which each end of the structure confronted by an armature is co-planar with the co-planar surfaces on the magnetically soft members.

8. A relay according to claim 7, and also comprising a pair of flat shims, each interposed between the flat side of a corresponding armature and the flat surface of the corresponding end of said structure and each providing opposite edges about which the corresponding armature is capable of rocking.

9. A relay according to claim 7, and also comprising a pair of rollers, each interposed between a corresponding armature and the corresponding end of said structure and located by recesses formed in said armature and said corresponding end, each roller providing for said armature a support on which said armature is capable of rolling.

10. A relay according to claim 7, and also comprising two pairs of projections, each pair extending between a corresponding armature and the corresponding end of said structure and providing a pivotal support for said armature.

11. A relay according to claim 10, each of said projections extending into a recess formed in the corresponding end of said structure and being adjustably secured to said corresponding armature, whereby the air gaps between said corresponding armature and said members may be varied.

12. A relay according to claim 1, the said side of each armature being flat and mounted to face coplanar surfaces formed on said members, the corresponding end of said structure being rounded so as to provide for the corresponding armature a support over which this armature is capable of rolling.

13. A relay according to claim 1, wherein each end of the said structure lies intermediate the said magnetically soft members.

14. A polarised electromagnetic relay comprising a signals winding, a stationary magnetic structure linked with said winding and presenting a pair of ends at which any signals flux appears, a pair of armatures without mechanical coupling between them, each of said armatures being mounted to turn about an intermediate axis at a corresponding end of said structure, two separate magnetically soft members arranged with respect to the armatures to provide magnetically parallel paths for the flow of signals flux which passes through the armatures in series, the said members being disposed to confront each of the armatures at locations disposed at opposite sides of the axis of turning of the armature, and a polarising magnet having its opposite poles adjacent said two magnetically soft members respectively to conduct polarising flux from one pole to the other through two parallel paths passing through said two armatures respectively.

15. A polarised electromagnetic relay comprising a signals winding, a stationary magnetic structure linked with said winding and presenting a pair of ends at which any signals flux appears, a pair of armatures without mechanical coupling between them, each of said armatures being arranged at a corresponding end of said structure, two separate magnetically soft members arranged between the armatures to provide magnetically parallel paths for the flow of signals flux through the armatures in series, and a polarising magnet having its opposite poles adjacent a respective member to conduct polarizing flux from one pole to the other through the said two armatures in parallel, the corresponding end of said structure for each armature lying on the same side of the armature as said members and lying intermediate said members, the said side of each armature being flat and mounted to face co-planar surfaces formed on said members and the corresponding end of said structure, a pair of rollers, each interposed between a corresponding armature and the corresponding end of said structure and located by recesses formed in said armature and said corresponding end, each roller providing for said armature a support on which said armature is capable of rolling.

References Cited in the file of this patent

UNITED STATES PATENTS

1,901,443	Garvin	Mar. 14, 1933
2,391,692	Estes	Dec. 25, 1945
2,416,681	Dickten	Mar. 4, 1947
2,491,098	Field	Dec. 13, 1949
2,496,880	Leland	Feb. 7, 1950
2,862,078	Russell et al.	Nov. 25, 1958