March 31, 1925. 1,531,674

G. L. MARTIN

DRIVING MECHANISM

Filed Jan. 16, 1924

FIG_1_

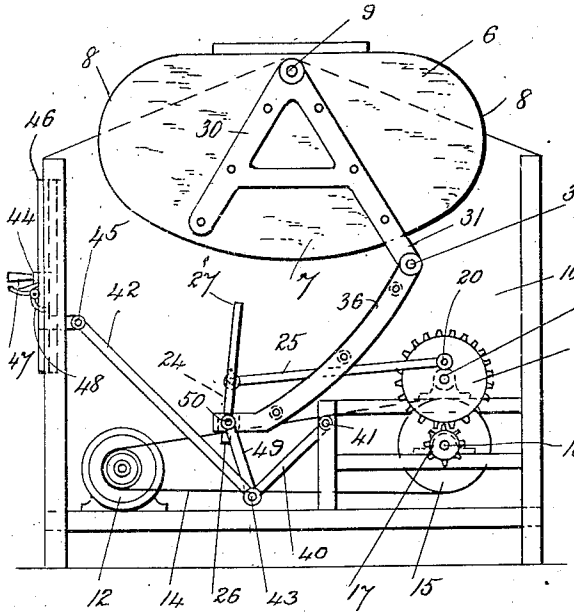

FIG_3_

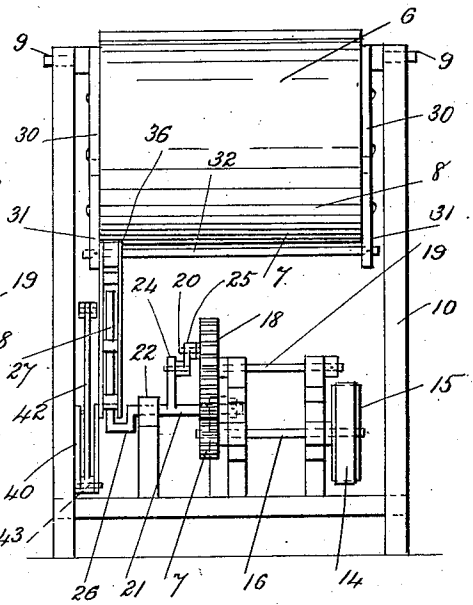

FIG_2_

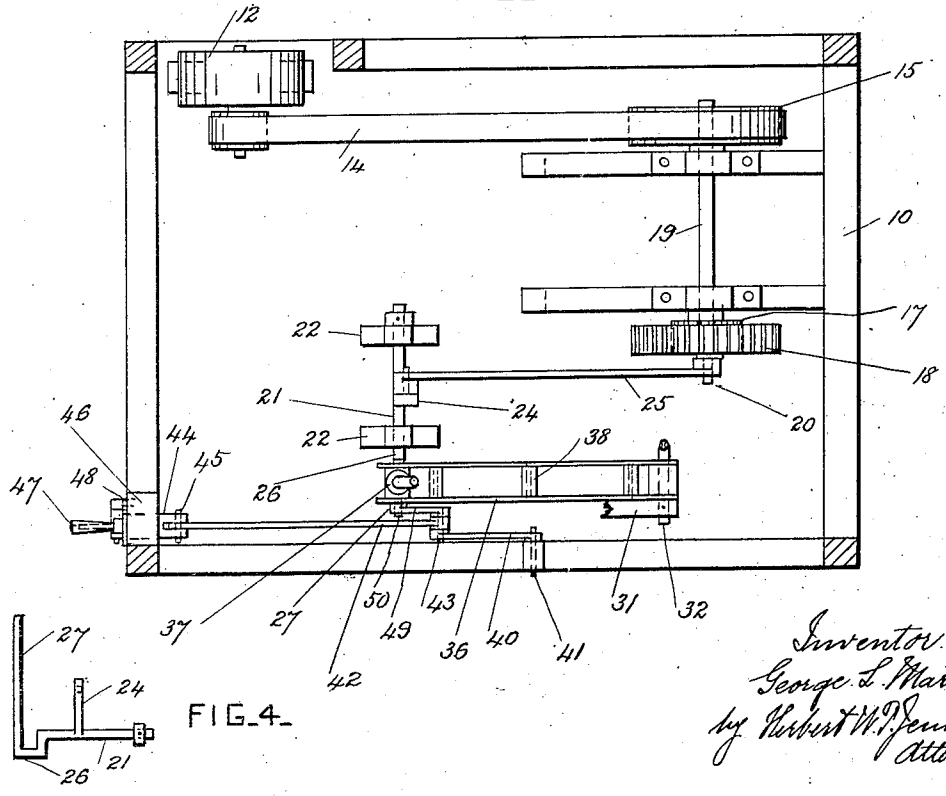

FIG_4_

Inventor
George L. Martin
by Herbert W. Jenner,
Attorney

Patented Mar. 31, 1925. 1,531,674

UNITED STATES PATENT OFFICE.

GEORGE L. MARTIN, OF CANTON, MISSOURI.

DRIVING MECHANISM.

Application filed January 16, 1924. Serial No. 686,631.

To all whom it may concern:

Be it known that I, GEORGE L. MARTIN, a citizen of the United States, residing at Canton, in the county of Lewis and State of Missouri, have invented certain new and useful Improvements in Driving Mechanism, of which the following is a specification.

This invention relates to mechanism for oscillating the tubs of washing machines which are mounted on horizontal pivots; and it consists in the novel construction and combination of the parts hereinafter fully described and claimed whereby the speed of the tub may be varied at will without varying the speed of the motor.

In the drawings, Figure 1 is a side view of a washing machine provided with driving mechanism according to this invention, and with one side of the casing removed. Fig. 2 is a plan view of the driving mechanism. Fig. 3 is an end view of the same, showing also the tub. Fig. 4 is a detail view of the rock-shaft. Fig. 2 is drawn to a larger scale than the other figures.

This mechanism is specially adapted to drive washing machines of the type shown in the patent issued to me, No. 911,737, on Feb. 9, 1909. In such a machine a tub 6 having a curved bottom 7 and rounded ends 8 is mounted to oscillate on horizontal pivots 9 in a suitable frame or casing 10. The tub is preferably oscillated by an electric motor 12, but any other approved motor may be used. This motor is preferably connected by a driving belt 14 with a belt pulley 15 on a countershaft 16 which is journaled in the casing. The countershaft has a toothed pinion 17 secured on it which gears into a toothed wheel 18 secured on a driving shaft 19 which is also journaled in the frame. A crankpin 20 projects from the wheel 18. A rock-shaft 21 is mounted in bearings 22 on the frame, and is provided with a driving arm 24 which projects upwardly. The driving arm 24 is operatively connected with the crank pin 20 by means of a connecting-rod 25, so that the rock-shaft is oscillated continuously as long as the motor is at work. The rock-shaft has a downwardly cranked portion 26 at one end, and a long arm 27 extends upwardly from this cranked portion past the axis of the rock-shaft.

The sides of the tub preferably have two similar A-shaped frames 30 secured to them in order to stiffen them and distribute the strains. The pivots 9 project from the top parts, and one member 31 of each of these frames projects below the tub and has a coupling-rod 32 secured to it and extending crosswise of the tub underneath it. A curved connecting-rod 36 is provided, and has an eye 37 at one end which is slidable upon the arm 27. This connecting-rod is preferably formed of two side bars having distance-pieces 38 secured between them, and its upper end is pivoted on one end portion of the coupling-rod 32. A short rod 40 is pivoted at one end to the frame by a pin 41, and a long rod 42 is pivoted by a pin 43 to the other end of the rod 40, and is normally arranged at substantially a right angle to it. The other end of the long rod 42 is pivoted to a slide 44 by a pin 45. This slide works in a vertical guide 46 on the casing, and is provided with a handle 47, and a spring-controlled catch 48 of any approved form for holding it in position. The joint pin 43 of the two rods is operatively connected with the slidable end portion of the connecting-rod 36 by a link 49 and pin 50. The eye 37 is raised and lowered on the long arm 27 to vary the speed of the tub. When the eye is raised the speed and amplitude of oscillation of the tub is increased, and when the eye is lowered until it is in the cranked portion 26, and in line with the axis of the rock-shaft, the tub is locked and is held stationary with the motor still at work.

The clothes are placed in the tub, and the motor is started with the tub stationary. The eye 37 is then raised gradually on the arm 27 so that the tub is oscillated with gradually increasing speed until the inertia of it and its contents has been overcome and the desired maximum speed has been attained gently. The action is reversed when the tub is being stopped, and this manner of starting and stopping the tub is found to be highly advantageous. A wringing machine can also be driven by the motor when the tub is held in a stationary position.

What I claim is:

1. The combination, with a pivoted washing machine tub, of a rock-shaft mounted below the tub and provided with a cranked portion having an upwardly projecting arm, means for oscillating the rock-shaft, a connecting-rod pivotally connected with the tub and provided with an eye which is slidable on the said arm, two rods pivotally connected together and arranged at an angle to

each other, one of the rods having a stationary pivot, a slidable catch for adjusting and retaining the two rods, and a link pivotally connecting the jointed ends of the said rods with the eye of the said connecting-rod.

2. The combination, with a pivoted washing machine tub, of a rock-shaft provided at one end with a crank having a crank arm which projects past the axis of the rock-shaft, means for oscillating the rock-shaft, a connecting-rod pivoted to the tub and provided with an eye which is slidable on the said crank arm, two rods pivoted together and arranged at an angle to ech other, one of the rods having a stationary pivot, means for adjusting the rods to vary the position of their joint, and means for connecting the joint of the rods with the eye of the connecting-rod.

In testimony whereof I have affixed my signature.

GEORGE L. MARTIN.