J. M. KIEFER, JR.

ELECTRIC CABLE CONNECTING MEANS.

APPLICATION FILED JUNE 21, 1918.

1,336,437. Patented Apr. 13, 1920.

Fig. 1.

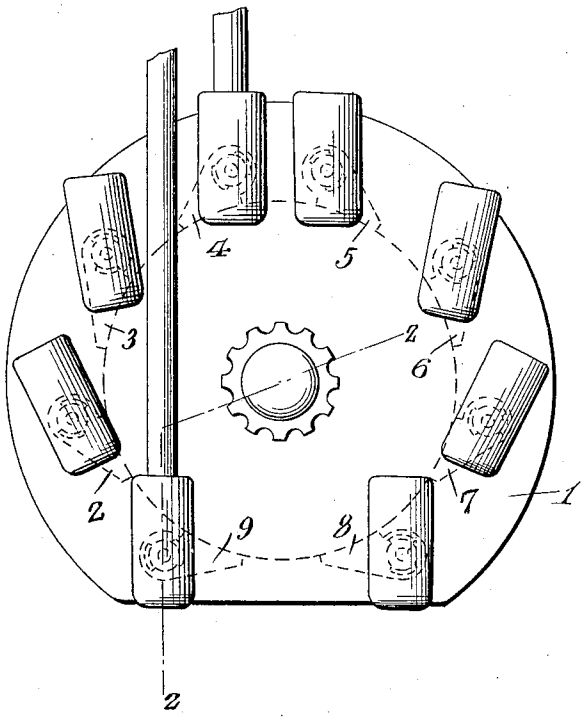

Fig. 2.

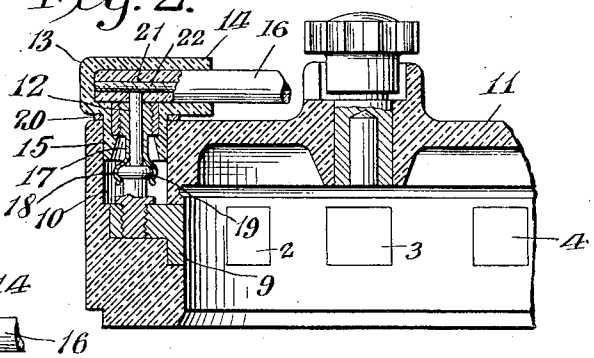

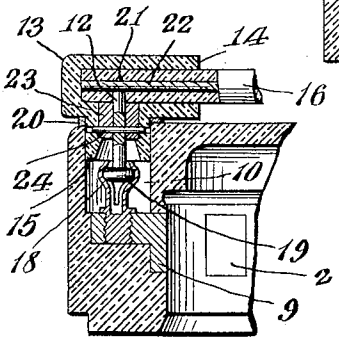

Fig. 3.

Inventor
John M. Kiefer Jr.
By Albion D. T. Libby
Attorney

UNITED STATES PATENT OFFICE.

JOHN M. KIEFER, JR., OF NEWARK, NEW JERSEY, ASSIGNOR TO SPLITDORF ELECTRICAL COMPANY, OF NEWARK, NEW JERSEY.

ELECTRIC-CABLE-CONNECTING MEANS.

1,336,437. Specification of Letters Patent. Patented Apr. 13, 1920.

Application filed June 21, 1918. Serial No. 241,153.

To all whom it may concern:

Be it known that I, JOHN M. KIEFER, Jr., a citizen of the United States, residing at Newark, in the county of Essex and State of New Jersey, have invented certain new and useful Improvements in Electric-Cable-Connecting Means, of which the following is a specification.

My invention relates particularly to means for connecting an electric cable to a distributer used in connection with an ignition generator. The vibration produced by internal combustion engines, especially those used on airplanes, is considerable, which together with the other shocks to which an autovehicle is subjected is apt to loosen the electrical connection to the ignition machine and consequently considerable attention must be paid to the means used in attaching electric cables to the ignition device.

It is the object of my invention to provide means of attaching electric cables to the distributer of an ignition generator, which is strong, relatively simple, water and dust proof, but which connecting means, while a secure one, is such that the electric cable or cables may be quickly detached from the distributer block.

Other and further objects will be apparent to one skilled in the art after a study of this specification taken in connection with the drawing which forms a part thereof.

In the drawing, Figure 1 illustrates an 8 cylinder distributer block adapted to be used in connection with an ignition magneto.

Fig. 2 is a partial sectional view, along the line 2—2 of Fig. 1.

Fig. 3 is a similar view but with an alternative arrangement of the connecting electrical contacts.

Referring particularly to the details, wherein like numbers refer to corresponding parts in the various views, 1 is a distributer block of insulating material which is adapted to be fastened to the ignition generator by any suitable fastening means. The block 1, as shown, is suitable to furnish ignition current to an 8 cylinder engine since there are 8 contact segments 2 to 9 inclusive, which segments are shown in dotted position in Fig. 1 and part of which are shown in Fig. 2.

In order to simplify this description only one connection will be referred to as it is to be understood that the others are the same as the one shown in section in either Figs. 2 or 3.

The block 1 has a bore 10 extending from its exterior face 11 toward the contact segment 9 to which is fastened in any suitable manner, as indicated in Fig. 2, a stiletto pin 12 which is positioned within the bore 10 and preferably extends through the bore 10 beyond the face 11. A cable holder 13 has two projections 14 and 15 each of which have borings extending one into the other. The boring in projection 14 is adapted to receive an insulated electrical cable 16. Mounted within the boring in projection 15 is a clamping device 17, preferably made up of resilient material, having its end 18 formed to fit over an enlargement 19 on the stiletto pin 12. After the cable 16 has been inserted into the holder 13, as above described, the projection 15 is inserted in the bore 10 in such a way that the stiletto pin passes through the clamp 17 and its end 21, being supported by the end of the clamp 17, pierces the insulation of cable 16 and into the conductor 22. A soft insulating washer 20 is used to seal the joint between the holder 13 and the face 11 of the block 1.

In the modified form shown in Fig. 3, the stiletto pin 12 is permanently fastened to a bushing 23 that is carried in the projection by means of the pin 24 and the clamp 17 is constructed so as to be fastened to the contact segment 9 in any suitable manner. The method of inserting the holder 13 in the block is the same as described for Fig. 2.

While I have shown two forms in which my invention may be put into practice, I do not wish to be limited to the exact construction of the details shown as these details may be varied without departing from the spirit of my invention and the scope of the appended claims.

Having thus described my invention what I claim is:

1. An electric cable connecting means including in combination, a block of insulating material having one or more contact segments set therein, a bore in said block extending from its exterior face to said contact segment, a stiletto pin fastened to said contact segment and extending outwardly in the bore beyond the face of said block, a holder having two projections substantially at right angles to each other with intercon-

necting borings, one of said borings adapted to receive an electric cable, the other boring having means mounted therein to engage said stiletto pin intermediate its ends when the holder projection carrying said means is inserted into the bore in said block whereby said pin passes through said engaging means into the electric cable for the purpose described.

2. An electric cable connecting means including in combination, a block of insulating material having one or more contact segments set therein, a bore in said block extending from its exterior face toward said contact segment, a stiletto pin fastened to said contact segment and extending outwardly in said bore, said pin having an enlargement intermediate the segment and its pointed end, a holder having two projections substantially at right angles to each other with interconnecting borings, an electric cable seated in one of said borings, means mounted in the other of said borings for engaging the enlargement on the stiletto pin when the holder projection carrying said means is inserted into the bore in said block, whereby said pin pierces the electric cable and is held in such position by said pin enlargement engaging means.

3. In electric cable connecting means including in combination, a block of insulating material having one or more contacts set therein, a bore in said block extending from its exterior face toward said contact segment, a holder formed to receive an electric cable and having a projection adapted to fit within said bore in said block, a spring clamp carried within the interior of said projection and a stiletto pin mounted in the block within said bore and electrically connected to said contact segment, said pin being adapted to pierce said electric cable when the projection on the holder is inserted in said bore, whereby said spring clamp engages the stiletto pin intermediate its ends to hold the holder in place on the block, as and for the purpose described.

4. In electric cable connecting means including in combination, a block of insulating material having one or more contact segments set therein, a bore in said block extending from its exterior face to said contact segment, a holder having two projections substantially at right angles to each other with interconnecting borings, one of said borings adapted to receive an electric cable, the other of said borings having means for supporting one end of a stiletto pin which is adapted to pierce said electric cable when inserted through said supporting means, and clamping means adapted to engage the stiletto pin within the bore of said block in such a manner as to securely hold the holder in position against the face of the block and make an electrical connection between the contact segment and the cable.

5. In electric cable connecting means including in combination, a block of insulating material having one or more contact segments set therein, a bore in said block extending from its exterior face toward said contact segment, a holder having two projections with interconnecting borings, one of said projections and boring therein adapted to receive an electric cable, the other of said projections adapted to fit within the bore of said block, and means for fastening the holder in position on said block and making an electrical connection between said cable and said contact segment in the block, consisting of; a stiletto pin adapted to pierce the cable and a clamping device independent of the cable for engaging the stiletto pin intermediate its ends.

6. In electric cable connecting means including in combination, a block of insulating material having one or more contact segments set therein, a bore in said block extending from its exterior face toward said contact segment, a holder having two projections with interconnecting borings, one of said projections and boring therein adapted to receive an electric cable, the other of said projections adapted to fit within the bore of said block, and means for fastening the holder in position on said block and making an electrical connection between said cable and said contact segment in the block; consisting of, a stiletto pin having an enlargement thereon intermediate its ends and a spring clamp for snapping over the enlargement on the stiletto pin.

7. In electric cable connecting means for a distributer including in combination, a block of insulating material having a relatively large central bore and having one or more contact segments set therein and presenting contact faces on the surface of said bore, an additional smaller bore in said block extending from its exterior face to said contact segment, a holder having two projections with interconnecting borings, one of said projections and boring therein adapted to receive an electric cable, the other of said projections adapted to fit within the second mentioned bore of said block, and common means for detachably fastening the holder in position on said block and for making an electrical connection between said cable and said contact segment in the block.

In witness whereof, I affix my signature.

JOHN M. KIEFER, JR.