Innovation, Sciences et Développement économique Canada
Office de la Propriété Intellectuelle du Canada

Innovation, Science and Economic Development Canada
Canadian Intellectual Property Office

CA 2948495 C 2020/12/29

(11)(21) 2 948 495

(12) BREVET CANADIEN
CANADIAN PATENT

(13) C

(86) Date de dépôt PCT/PCT Filing Date: 2015/05/11
(87) Date publication PCT/PCT Publication Date: 2015/11/12
(45) Date de délivrance/Issue Date: 2020/12/29
(85) Entrée phase nationale/National Entry: 2016/11/08
(86) N° demande PCT/PCT Application No.: US 2015/030141
(87) N° publication PCT/PCT Publication No.: 2015/172144
(30) Priorités/Priorities: 2014/05/09 (US61/990,974); 2015/05/06 (US14/705,339)

(51) Cl.Int./Int.Cl. *F04B 27/04* (2006.01), *F04B 35/00* (2006.01), *F04B 39/06* (2006.01)

(72) Inventeur/Inventor:
HRITZ, JEFFREY, US

(73) Propriétaire/Owner:
WESTINGHOUSE AIR BRAKE TECHNOLOGIES CORPORATION, US

(74) Agent: GOODMANS LLP

(54) Titre : COMPRESSEUR SANS HUILE A CONFIGURATION RADIALE
(54) Title: RADIALLY CONFIGURED OIL-FREE COMPRESSOR

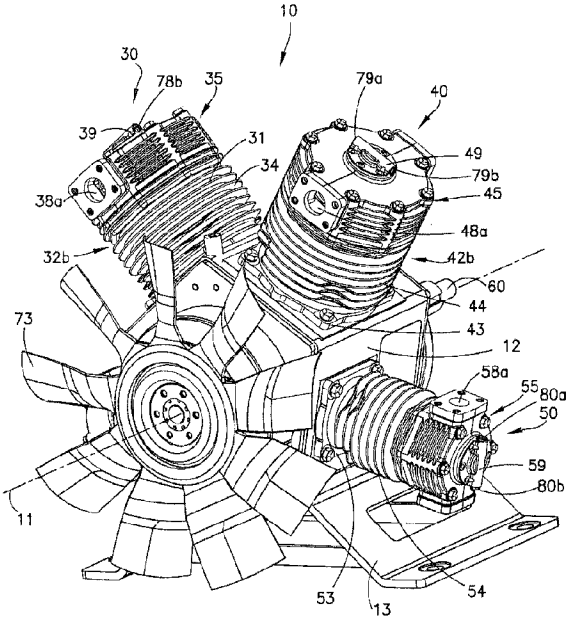

(57) Abrégé/Abstract:
An oil-free compressor for a rail vehicle includes a compressor housing, a first low pressure piston cylinder supported in the compressor housing, a second low pressure piston cylinder supported in the compressor housing, a first high pressure piston cylinder supported in the compressor housing, a second high pressure piston cylinder supported in the compressor housing, and a crankshaft assembly supported by the compressor housing and linked to pistons of the piston cylinders by respective connecting rods. The first and second low pressure piston cylinders and the first and second high pressure piston cylinders are positioned in an X-shaped configuration around an outer circumference of the compressor housing.

(12) INTERNATIONAL APPLICATION PUBLISHED UNDER THE PATENT COOPERATION TREATY (PCT)

(19) World Intellectual Property Organization
International Bureau

(43) International Publication Date
12 November 2015 (12.11.2015)

WIPO | PCT

(10) International Publication Number
WO 2015/172144 A1

(51) International Patent Classification:
F04B 27/04 (2006.01) *F04B 39/06* (2006.01)
F04B 35/00 (2006.01)

(21) International Application Number:
PCT/US2015/030141

(22) International Filing Date:
11 May 2015 (11.05.2015)

(25) Filing Language: English

(26) Publication Language: English

(30) Priority Data:
61/990,974 9 May 2014 (09.05.2014) US
14/705,339 6 May 2015 (06.05.2015) US

(71) Applicant: **WESTINGHOUSE AIR BRAKE TECHNOLOGIES CORPORATION** [US/US]; 1001 Air Brake Avenue, Wilmerding, Pennsylvania 15148 (US).

(72) Inventor: **HRITZ, Jeffrey**; 6052 Independence Drive, Jefferson Hills, Pennsylvania 15025 (US).

(74) Agents: **BYRNE, Richard, L.** et al.; One Gateway Center, 420 Ft. Duquesne Blvd., Suite 1200, Pittsburgh, Pennsylvania 15222 (US).

(81) Designated States *(unless otherwise indicated, for every kind of national protection available)*: AE, AG, AL, AM, AO, AT, AU, AZ, BA, BB, BG, BH, BN, BR, BW, BY, BZ, CA, CH, CL, CN, CO, CR, CU, CZ, DE, DK, DM, DO, DZ, EC, EE, EG, ES, FI, GB, GD, GE, GH, GM, GT, HN, HR, HU, ID, IL, IN, IR, IS, JP, KE, KG, KN, KP, KR, KZ, LA, LC, LK, LR, LS, LU, LY, MA, MD, ME, MG, MK, MN, MW, MX, MY, MZ, NA, NG, NI, NO, NZ, OM, PA, PE, PG, PH, PL, PT, QA, RO, RS, RU, RW, SA, SC, SD, SE, SG, SK, SL, SM, ST, SV, SY, TH, TJ, TM, TN, TR, TT, TZ, UA, UG, US, UZ, VC, VN, ZA, ZM, ZW.

(84) Designated States *(unless otherwise indicated, for every kind of regional protection available)*: ARIPO (BW, GH, GM, KE, LR, LS, MW, MZ, NA, RW, SD, SL, ST, SZ, TZ, UG, ZM, ZW), Eurasian (AM, AZ, BY, KG, KZ, RU, TJ, TM), European (AL, AT, BE, BG, CH, CY, CZ, DE, DK, EE, ES, FI, FR, GB, GR, HR, HU, IE, IS, IT, LT, LU, LV, MC, MK, MT, NL, NO, PL, PT, RO, RS, SE, SI, SK, SM, TR), OAPI (BF, BJ, CF, CG, CI, CM, GA, GN, GQ, GW, KM, ML, MR, NE, SN, TD, TG).

Declarations under Rule 4.17:

— *as to applicant's entitlement to apply for and be granted a patent (Rule 4.17(ii))*

— *as to the applicant's entitlement to claim the priority of the earlier application (Rule 4.17(iii))*

Published:

— *with international search report (Art. 21(3))*

(54) Title: RADIALLY CONFIGURED OIL-FREE COMPRESSOR

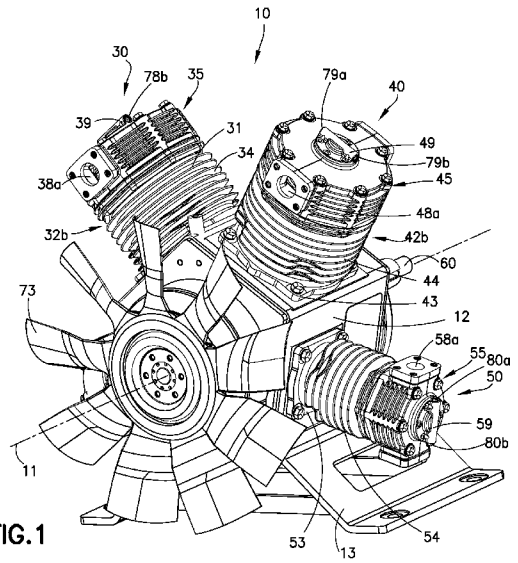

FIG.1

(57) Abstract: An oil-free compressor for a rail vehicle includes a compressor housing, a first low pressure piston cylinder supported in the compressor housing, a second low pressure piston cylinder supported in the compressor housing, a first high pressure piston cylinder supported in the compressor housing, a second high pressure piston cylinder supported in the compressor housing, and a crankshaft assembly supported by the compressor housing and linked to pistons of the piston cylinders by respective connecting rods. The first and second low pressure piston cylinders and the first and second high pressure piston cylinders are positioned in an X-shaped configuration around an outer circumference of the compressor housing.

WO 2015/172144 A1

RADIALLY CONFIGURED OIL-FREE COMPRESSOR

[0001]

BACKGROUND OF THE INVENTION

Field of the Invention

[0002] The present disclosure relates to the field of air compressors adapted for use on rail vehicles for supplying compressed air to pneumatic units associated with the rail vehicle and, in particular, to an oil-free air compressor on a rail vehicle for supplying compressed air to various pneumatic units associated with the rail vehicle.

Description of Related Art

[0003] The use of a multiple stage, multiple cylinder air compressor is well known in the art. It is common practice to use a multiple stage, multiple cylinder air compressor on a locomotive or other rail vehicle to provide compressed air that is consumed by various pneumatic devices throughout the locomotive and railcars to provide a variety of critical functions. One of these primary functions is to operate the locomotive and railcar brakes. The traditional oil-flooded reciprocating compressors utilized commonly throughout North America are three cylinder, two stage compressors that are available in many different models and configurations. One of the most common configurations for a compressor is a compressor with two first stage or low pressure cylinders and one second stage or high pressure cylinder. This compressor is often configured in a "W" configuration with the low pressure cylinders banked at 60 degrees to each side of the vertical high pressure cylinder. The compressor utilizes a large oil sump to provide lubrication and internal component cooling.

[0004] A less common and more recent approach to a locomotive air compressor is to use oil-free reciprocating compressors in place of the traditional oil flooded variety. This oil-free technology reduces the need for a large oil sump in the compressor housing and allows for different cylinder configurations to achieve specific improvements such as torque pulse control, dynamic balancing, and overall size reductions. A problem commonly associated with the new oil-free reciprocating compressors is overheating, which can lead to the compressor shutting down or operating at an inefficient level. Some current oil-free reciprocating compressors also experience high torque pulses and uneven dynamic balancing and are

Date Reçue/Date Received 2020-06-26

designed to improve one of these features at the expense of the other or at the expense of a larger overall compressor size. An example of an oil-free air compressor for a rail vehicle is disclosed in U.S. Published Patent Application No. 2015-0075369 to Kapadia et al., which may be referred to.

[0005] By nature of its design, a reciprocating compressor transfers rotary motion of a crankshaft to reciprocating motion of one or more pistons through a matched number of connecting rods. A reciprocating air compressor uses a connecting rod to connect the rotating crankshaft (at a crank pin) to reciprocating pistons (at a wrist pin). The connections between the wrist pin, piston, connecting rod, and crankshaft must include a bearing surface capable of handling the oscillating or rotating motion and the associated loads from inertial, frictional, and gas compression forces. There are many acceptable bearing types and mounting methods used to create a reliable bearing and component assembly. The connecting rods contain bearings to transfer load and motion from the compressor crankshaft through the connecting rod to the wrist pin and piston assembly.

[0006] In a traditional oil-flooded air compressor, the bearings may be of a variety of the types such as plain bearings, ball bearings, rollers bearings, etc., as the oil provides necessary cooling and lubrication. This variety allows the use of split bearings which aid in the assembly of the air compressor. In an oil-free air compressor, a variety of bearings may also be utilized. There are advantages, however, to using single piece bearings as opposed to split bearings, especially in regards to the life of the air compressor and the design simplicity. At the same time, these advantages are offset by disadvantages of such designs of the connecting rods that affect the size of the air compressor, complexity to assemble the air compressor, maintainability, and the life of the air compressor.

[0007] There is a current need for an oil-free reciprocating compressor with a reduced overall size and a reduction in torque pulse. There is also a current need for an oil-free reciprocating compressor with improved dynamic balancing and improved air flow for cooling the cylinders of the compressor. There is also a current need for improved compressor housing ventilation. There is also a current need for a single piece bearing assembly on a crankshaft end of a connecting rod that can reduce the size of the connecting rod, improve the interchangeability of the connecting rods, improve the field of maintainability of the air compressor, and simplify installation of the connecting rod.

SUMMARY OF THE INVENTION

Date Reçue/Date Received 2020-06-26

[0008] In one aspect, an oil-free compressor for a rail vehicle includes a compressor housing, at least two piston cylinders radially supported in the compressor housing, and a crankshaft assembly supported by the compressor housing and linked to pistons of the at least two piston cylinders by respective connecting rods.

[0009] The at least two piston cylinders may include a first and second low pressure piston cylinder radially supported in a first and second opening in the compressor housing, and a first and second high pressure piston cylinder radially supported in a third and fourth opening in the compressor housing. The first and second low pressure piston cylinders may be positioned between the first and second high pressure piston cylinders on the compressor housing. The first and second low pressure piston cylinders may be positioned approximately 72 degrees apart from one another. The first low pressure piston cylinder may be positioned approximately 72 degrees apart from the first high press piston cylinder, and the second low pressure piston cylinder may be positioned approximately 72 degrees apart from the second high pressure piston cylinder. The first low pressure piston cylinder, the second low pressure piston cylinder, the first high pressure piston cylinder, and the second high pressure piston cylinder may be spaced equally apart from one another. The first low pressure piston cylinder, the second low pressure piston cylinder, the first high pressure piston cylinder, and the second high pressure piston cylinder may be spaced approximately 72 degrees apart from one another. The first and second high pressure piston cylinders may be positioned approximately 18 degrees below a horizontal plane of the compressor. The compressor housing may have a substantially pentagonal cross-sectional shape. A cooling fan may be operatively connected to the crankshaft assembly. The cooling fan may create a flow path perpendicular to the piston cylinders. Each of the piston cylinders may be positioned in the flow path of the cooling fan.

[0010] In another aspect, an oil-free compressor for a rail vehicle includes a compressor housing, a first low pressure piston cylinder supported in the compressor housing, a second low pressure piston cylinder supported in the compressor housing, a first high pressure piston cylinder supported in the compressor housing, and a second high pressure piston cylinder supported in the compressor housing. The first and second low pressure piston cylinders and the first and second high pressure piston cylinders extend radially from a longitudinal axis of the compressor housing. The first and second low pressure piston cylinders and the first and second high pressure piston cylinders are positioned in a substantially straight line around an outer circumference of the compressor housing.

[0011] The first and second low pressure piston cylinders may be positioned between the first and second high pressure piston cylinders on the compressor housing. The first and second

low pressure piston cylinders may be positioned approximately 72 degrees apart from one another. The first low pressure piston cylinder may be positioned approximately 72 degrees apart from the first high pressure piston cylinder, and the second low pressure piston cylinder may be positioned approximately 72 degrees apart from the second high pressure piston cylinder. The first low pressure piston cylinder, the second low pressure piston cylinder, the first high pressure piston cylinder, and the second high pressure piston cylinder may be spaced approximately 72 degrees apart from one another. The first and second high pressure piston cylinders may be positioned approximately 18 degrees below a horizontal plane of the compressor. A cooling fan may be operatively connected to the crankshaft assembly. The cooling fan may create a flow path perpendicular to the piston cylinders. A crankshaft assembly may be supported by the compressor housing and linked to pistons of the first and second low pressure piston cylinders and the first and second high pressure piston cylinders by respective connecting rods.

[0012] In another aspect, an oil-free compressor for a rail vehicle includes a compressor housing, a first low pressure piston cylinder supported in the compressor housing, a second low pressure piston cylinder supported in the compressor housing, a first high pressure piston cylinder supported in the compressor housing, a second high pressure piston cylinder supported in the compressor housing, and a crankshaft assembly supported by the compressor housing and linked to pistons of the piston cylinders by respective connecting rods. The first and second low pressure piston cylinders and the first and second high pressure piston cylinders may be positioned in an X-shaped configuration around an outer circumference of the compressor housing.

[0013] The first and second high pressure piston cylinders may be configured as first and second lower legs of the X-shaped configuration, and the first and second low pressure piston cylinders may be configured as first and second upper legs of the X-shaped configuration. An angular distance between the two lower legs of the X-shaped configuration may be greater than the distance between the two upper legs of the X-shaped configuration. The X-shaped configuration may be non-symmetrical about a horizontal plane passing through a longitudinal axis of the crankshaft assembly. The X-shaped configuration may be symmetrical about a vertical plane passing through a longitudinal axis of the crankshaft assembly. An angular distance between the first high pressure piston cylinder and the first low pressure piston cylinder, an angular distance between the first low pressure piston cylinder and the second low pressure piston cylinder, and an angular distance between the second low pressure piston cylinder and the second high pressure piston cylinder may be equal to one another. The first

and second high pressure piston cylinders may be positioned below a horizontal plane passing through a longitudinal axis of the crankshaft assembly. An angular distance between the two lower legs of the X-shaped configuration may be less than an angular distance between the first lower leg, the first upper leg, the second upper leg, and the second lower leg of the X-shaped configuration. The compressor housing may have a pentagonal cross-sectional shape. A cooling fan may be operatively connected to the crankshaft assembly. The cooling fan may create a flow path substantially perpendicular to the piston cylinders. Each of the piston cylinders are positioned in the flow path of the cooling fan.

[0014] In yet another aspect, an oil-free compressor for a rail vehicle includes a compressor housing, a first low pressure piston cylinder supported in the compressor housing, a second low pressure piston cylinder supported in the compressor housing, a first high pressure piston cylinder supported in the compressor housing, a second high pressure piston cylinder supported in the compressor housing, a crankshaft assembly supported by the compressor housing and linked to pistons of the piston cylinders by respective connecting rods, and a cooling fan operatively connected to the crankshaft assembly. The first and second low pressure piston cylinders and the first and second high pressure piston cylinders are positioned in an X-shaped configuration around an outer circumference of the compressor housing.

[0015] The first and second high pressure piston cylinders may be configured as first and second lower legs of the X-shaped configuration, and the first and second low pressure piston cylinders may be configured as first and second upper legs of the X-shaped configuration. An angular distance between the two lower legs of the X-shaped configuration may be greater than the distance between the two upper legs of the X-shaped configuration. The X-shaped configuration may be non-symmetrical about a horizontal plane passing through a longitudinal axis of the crankshaft assembly. An angular distance between the first high pressure piston cylinder and the first low pressure piston cylinder, an angular distance between the first low pressure piston cylinder and the second low pressure piston cylinder, and an angular distance between the second low pressure piston cylinder and the second high pressure piston cylinder may be equal to one another. The X-shaped configuration may be symmetrical about a vertical plane passing through a longitudinal axis of the crankshaft assembly. The cooling fan may create a flow path substantially perpendicular to the piston cylinders. Each piston cylinder may be positioned in the flow path of the cooling fan. The first and second high pressure piston cylinders may be positioned below a horizontal plane passing through a longitudinal axis of the crankshaft assembly.

[0016] Further details and advantages will be understood from the following detailed description read in conjunction with the accompanying drawings.

BRIEF DESCRIPTION OF THE DRAWINGS

[0017] **FIG. 1** is a front perspective view of a radially configured air compressor in accordance with this disclosure.

[0018] **FIG. 2** is a rear perspective view showing the radially configured air compressor of **FIG. 1**.

[0019] **FIG. 3** is a front view of the radially configured air compressor of **FIG. 1**.

[0020] **FIG. 4** is a rear view of the radially configured air compressor of **FIG. 1**.

[0021] **FIG. 5** is a top view of the radially configured air compressor of **FIG. 1**.

[0022] **FIG. 6** is a bottom view of the radially configured air compressor of **FIG. 1**.

[0023] **FIGS. 7** and **8** are side views of the radially configured air compressor of **FIG. 1**.

[0024] **FIG. 9** is a cross-sectional view of the radially configured air compressor of **FIG. 1** along line 9-9 in **FIG. 7**.

[0025] **FIG. 10** is a cross-sectional view of the radially configured air compressor of **FIG. 1** along line 10-10 in **FIG. 8**.

[0026] **FIG. 11** is a cross-sectional view of the radially configured air compressor of **FIG. 1** along line 11-11 in **FIG. 6**.

[0027] **FIG. 12** is a front perspective view of a connecting rod in accordance with this disclosure.

[0028] **FIG. 13** is a top view of the connecting rod of **FIG. 12**.

[0029] **FIG. 14** is a top view of the connecting rod of **FIG. 12** depicting the assembly of the connecting rod with the use of studs and locking nuts.

[0030] **FIG. 15** is a top view of the connecting rod of **FIG. 12** depicting the assembly of the connecting rod with the use of bolts.

[0031] **FIG. 16** is a front perspective view of the connecting rod of **FIG. 12** including bearings and sealing members.

[0032] **FIG. 17** is a top view of the connecting rod of **FIG. 16**.

DESCRIPTION OF THE PREFERRED EMBODIMENTS

[0033] For purposes of the description hereinafter, spatial orientation terms, as used, shall relate to the referenced aspect as it is oriented in the accompanying drawing, figures, or

otherwise described in the following detailed description. However, it is to be understood that the aspects described hereinafter may assume many alternative variations and configurations. It is also to be understood that the specific components, devices, features, and operational sequences illustrated in the accompanying drawing, figures, or otherwise described herein are simply exemplary and should not be considered as limiting.

[0034] Referring to **FIGS. 1-7**, an air compressor **10** according to one aspect is shown. As shown, the air compressor **10** is a multi-cylinder air compressor **10** including at least a first piston cylinder **20**, a second piston cylinder **30**, a third piston cylinder **40**, and a fourth piston cylinder **50**. In one aspect, the air compressor **10** is an oil-free air compressor. The first piston cylinder **20**, the second piston cylinder **30**, the third piston cylinder **40**, and the fourth piston cylinder **50** are supported by a compressor housing or crankcase **12** and are each driven by a crankshaft assembly **60** disposed within the compressor housing **12** and rotationally supported by the compressor housing **12**. The foregoing components of the air compressor **10** are described in detail herein. The air compressor **10** may have a pentagonal-shaped cross-section. A support member **13** is fastened to a bottom surface of the air compressor **10**. The support member **13** is used to mount the air compressor **10** on a locomotive or rail vehicle.

[0035] The first piston cylinder **20**, the second piston cylinder **30**, the third piston cylinder **40**, and the fourth piston cylinder **50** are of substantially similar construction with the first piston cylinder **20** operating as the first cylinder, the second piston cylinder **30** operating as the second cylinder, the third piston cylinder **40** operating as the third cylinder, and the fourth piston cylinder **50** operating as the fourth cylinder in the multi-cylinder air compressor **10**. In one aspect of the disclosure, the first piston cylinder **20** and the fourth piston cylinder **50** are high pressure piston cylinders. In this same aspect, the second piston cylinder **30** and the third piston cylinder **40** are low pressure piston cylinders. The first piston cylinder **20** and the fourth piston cylinder **50** are generally smaller than and generally have a smaller diameter than the second piston cylinder **30** and the third piston cylinder **40**.

[0036] In one aspect, the first piston cylinder **20**, the second piston cylinder **30**, the third piston cylinder **40**, and the fourth piston cylinder **50** are radially configured about a longitudinal axis **11** of the air compressor **10**. The piston cylinders **20**, **30**, **40**, **50** interface with an outer circumference of the air compressor **10**. In one aspect, the piston cylinders **20**, **30**, **40**, **50** are positioned in an X-shaped configuration around the outer circumference of the compressor housing. The first piston cylinder **20** and the fourth piston cylinder **50** may be configured as first and second lower legs of the X-shaped configuration. The second piston cylinder **30** and the third piston cylinder **40** may be configured as first and second upper legs of the X-shaped

configuration. In one aspect, the second piston cylinder **30** and the third piston cylinder **40** are positioned on the compressor housing **12** between the first piston cylinder **20** and the fourth piston cylinder **50**. As shown in **FIG. 5**, the first piston cylinder **20** and the fourth piston cylinder **50** may be offset on the compressor housing **12**, so that the first piston cylinder **20** and the fourth piston cylinder **50** are not positioned along the same radial line. It is also possible that the first piston cylinder **20**, the second piston cylinder **30**, the third piston cylinder **40**, and the fourth piston cylinder **50** would be aligned along a straight line around the outer circumference of the compressor housing 12.

[0037] As shown in **FIGS. 3** and **4**, the center of the first piston cylinder **20** is positioned at a first angle α from a horizontal **14** of the compressor housing **12**. In one aspect, the first angle α is 18 degrees. The center of the second piston cylinder **30** is positioned at a second angle β from the horizontal **14** of the compressor housing **12**. In one aspect, the second angle β is 54 degrees. In one aspect, the center of the first piston cylinder **20** is positioned 72 degrees apart from the center of the second piston cylinder **30**. The center of the second piston cylinder **30** and the center of the third piston cylinder **40** are positioned at a third angle γ from one another. In one aspect, the third angle γ is 72 degrees. The center of the third piston cylinder **40** is positioned at a fourth angle ε from the horizontal **14** of the compressor housing **12**. In one aspect, the fourth angle ε is 54 degrees. The center of the fourth piston cylinder **50** is positioned at a fifth angle θ from the horizontal **14** of the compressor housing **12**. In one aspect, the fifth angle θ is 18 degrees. In one aspect, the center of the third piston cylinder **40** is positioned 72 degrees apart from the center of the fourth piston cylinder **50**. In another aspect, the first piston cylinder **20** and the fourth piston cylinder **50** are positioned 144 degrees apart from one another. A sixth angle Δ is defined between the first piston cylinder **20** and the fourth piston cylinder **50**. In one aspect, the sixth angle Δ is 144 degrees. In one aspect, the combination of the first angle α and the second angle β, the third angle γ, and the combination of the fourth angle ε and the fifth angle θ are equal to one another. In this aspect, these angles are equal to 72 degrees. It is to be understood, however, that one of ordinary skill in the art would understand that additional aspects using different combinations of angles are also contemplated.

[0038] Referring to **FIGS. 3** and **4**, in one aspect, the sixth angle Δ is greater than the third angle γ. In other words, the distance between the first piston cylinder **20** and the fourth piston cylinder **50** is greater than the distance between the second piston cylinder **30** and the third piston cylinder **40**. In one aspect, the X-shaped configuration of the piston cylinders **20**, **30**, **40**, **50** is non-symmetrical about the horizontal plane **14** passing through the longitudinal axis **11** of the crankshaft assembly **60**. The X-shaped configuration of the piston cylinders **20**, **30**, **40**,

50 may be symmetrical about a vertical plane passing through the longitudinal axis 11 of the crankshaft assembly 60. The first piston cylinder 20 and the fourth piston cylinder 50 may be positioned below the horizontal plane 14 passing through the longitudinal axis 11 of the crankshaft assembly 60. In one aspect, the sixth angle Δ is less than the combination of the first angle α, the second angle β, the third angle γ, the fourth angle ε, and the fifth angle θ.

[0039] The positioning of the first piston cylinder 20, the second piston cylinder 30, the third piston cylinder 40, and the fourth piston cylinder 50 creates a reduction in the torque pulse of the air compressor 10 due to the gas forces generated during the compression stroke of each piston cylinder. A peak gas force occurs in a compressor cylinder as the piston approaches the top dead center within the cylinder. The gas force transmits a torque pulse through the crankshaft assembly 60, which is variable throughout the rotation of the crankshaft assembly 60. The crankshaft assembly 60 can experience different torque pulses at different locations based on the peak gas force created by each cylinder. Depending on the design, the torque pulse may change direction throughout a single rotation of the crankshaft assembly 60. This means that the torque pulse may change from a positive torque to a negative torque throughout a single rotation of the crankshaft assembly. This type of torque reversal is a common trait of reciprocating machines of any type. In multi-cylinder air compressors, the instantaneous torque of each piston is summed to create an overall torque curve for the compressor. Preexisting air compressors can experience an overall torque pulse that fluctuates between a high torque pulse value to a low torque pulse value. However, to reduce the amount of torsional force experienced by the crankshaft assembly 60, it is desirable to have an air compressor with a consistent overall torque pulse. By positioning the first piston cylinder 20, the second piston cylinder 30, the third piston cylinder 40, and the fourth piston cylinder 50 on the compressor housing 12 as described hereinabove, a more consistent overall torque pulse is achieved. Additionally, by using this configuration, the torque pulse of the air compressor 10 does not reverse directions throughout the rotation of the crankshaft assembly 60. This also helps to reduce the torsional force applied to the crankshaft assembly 60. The combination of the lack of reversal in the torque pulse and a reduced overall torque pulse results in an air compressor 10 that is easier on the driveline, which is especially advantageous in applications where the air compressor 10 is driven by an electric motor. Further, by positioning the second piston cylinder 30 and the third piston cylinder 40, which are low pressure cylinders, between the first piston cylinder 20 and the fourth piston cylinder 50, the torque pulse is further reduced. An air compressor 10 with two high pressure piston cylinders positioned between two low pressure piston cylinders would experience a higher torque pulse.

[0040] An additional improvement over preexisting air compressors is achieved by positioning the piston cylinders nearly 180 degrees out of phase. The dynamic balance of the air compressor **10** is improved as compared to preexisting air compressors. Therefore, the air compressor **10** experiences fewer off-balance forces that may affect the operation of the air compressor **10**.

[0041] As shown in FIGS. 9-11, the first piston cylinder **20** includes a cylindrical housing **21** that has a first end **22a** adapted to be inserted into a corresponding opening, as described herein, in the compressor housing **12**, and a second end **22b**. The cylindrical housing **21** is formed with a flange **23** located proximal of the first end **22a** for interfacing with the exterior of the compressor housing **12**. Heat-dissipating fins **24** may be provided about the cylindrical housing **21**, and the cylindrical housing **21** may be formed of any suitable material providing sufficient strength and heat-dissipating characteristics such as aluminum.

[0042] A cylinder head **25** is secured to the second end **22b** of the cylindrical housing **21**. The cylinder head **25** secures a valve assembly **26** on the second end **22b** of the cylindrical housing **21** via mechanical fasteners. The cylinder head **25** also houses an unloader cap **29** positioned above the valve assembly **26**. The unloader cap **29** houses an unloader piston **75** that is pneumatically operated by air piloted through the unloader cap **29** mechanically fastened to the top of the cylinder head **25**. A lubrication free seal between the unloader piston **75** and the unloader cap **29** separates the process pressurized air within the inlet portion of the cylinder head **25** from the pressurized air (pilot air) within the unloader system. The unloader piston **75** functions to hold the inlet side of the valve assembly **26** open when air pressure is applied to pilot ports **77a**, **77b** of the unloader cap **29**. During this period of operation, the compressor **10** can rotate without delivering compressed air to the compressor discharge. The cylinder head **25** includes a first air channel **28a** and a second air channel **28b**. The cylinder head **25** may be formed of any suitable material providing sufficient strength and heat transfer characteristics such as aluminum.

[0043] As noted previously, the second piston cylinder **30** has a substantially similar construction as the rest of the piston cylinders, as now described hereinafter. The second piston cylinder **30** includes a cylindrical housing **31** that has a first end **32a** adapted to be inserted into a corresponding opening, as described herein, in the compressor housing **12**, and a second end **32b**. The cylindrical housing **31** is formed with a flange **33** located proximal of the first end **32a** for interfacing with the exterior of the compressor housing **12**. Heat-dissipating fins **34** may be provided about the cylindrical housing **31**, and the cylindrical housing **31** may be

formed of any suitable material providing sufficient strength and heat-dissipating characteristics such as aluminum.

[0044] A cylinder head **35** is secured to the second end **32b** of the cylindrical housing **31**. The cylinder head **35** secures a valve assembly **36** on the second end **32b** of the cylindrical housing **31** via mechanical fasteners. The cylinder head **35** also houses an unloader cap **39** positioned above the valve assembly **36**. The unloader cap **39** houses an unloader piston that is pneumatically operated by air piloted through the unloader cap **39** mechanically fastened to the top of the cylinder head **35**. A lubrication free seal between the unloader piston and the unloader cap **39** separates the process pressurized air within the inlet portion of the cylinder head **35** from the pressurized air (pilot air) within the unloader system. The unloader piston functions to hold the inlet side of the valve assembly **36** open when air pressure is applied to pilot ports **78a**, **78b** of the unloader cap **39**. During this period of operation, the compressor **10** can rotate without delivering compressed air to the compressor discharge. The cylinder head **35** includes a first air channel **38a** and a second air channel **38b**. The cylinder head **35** may be formed of any suitable material providing sufficient strength and heat transfer characteristics such as aluminum.

[0045] As noted previously, the third piston cylinder **40** has a substantially similar construction as the rest of the piston cylinders, as now described hereinafter. The third piston cylinder **40** includes a cylindrical housing **41** that has a first end **42a** adapted to be inserted into a corresponding opening, as described herein, in the compressor housing **12**, and a second end **42b**. The cylindrical housing **41** is formed with a flange **43** located proximal of the first end **42a** for interfacing with the exterior of the compressor housing **12**. Heat-dissipating fins **44** may be provided about the cylindrical housing **41**, and the cylindrical housing **41** may be formed of any suitable material providing sufficient strength and heat-dissipating characteristics such as aluminum.

[0046] A cylinder head **45** is secured to the second end **42b** of the cylindrical housing **41**. The cylinder head **45** secures a valve assembly **46** on the second end **42b** of the cylindrical housing **41** via mechanical fasteners. The cylinder head **45** also houses an unloader cap **49** positioned above the valve assembly **46**. The unloader cap **49** houses an unloader piston that is pneumatically operated by air piloted through the unloader cap **49** mechanically fastened to the top of the cylinder head **49**. A lubrication free seal between the unloader piston and unloader cap **49** separates the process pressurized air within the inlet portion of the cylinder head **45** from the pressurized air (pilot air) within the unloader system. The unloader piston functions to hold the inlet side of the valve assembly **46** open when air pressure is applied to pilot ports

79a, 79b of the unloader cap 49. During this period of operation, the compressor 10 can rotate without delivering compressed air to the compressor discharge. The cylinder head 45 includes a first air channel 48a and a second air channel 48b. The cylinder head 45 may be formed of any suitable material providing sufficient strength and heat transfer characteristics such as aluminum.

[0047] As noted previously, the fourth piston cylinder 50 has a substantially similar construction as the rest of the piston cylinders, as now described hereinafter. The fourth piston cylinder 50 includes a cylindrical housing 51 that has a first end 52a adapted to be inserted into a corresponding opening, as described herein, in the compressor housing 12, and a second end 52b. The cylindrical housing 51 is formed with a flange 53 located proximal of the first end 52a for interfacing with the exterior of the compressor housing 12. Heat-dissipating fins 54 may be provided about the cylindrical housing 51, and the cylindrical housing 51 may be formed of any suitable material providing sufficient strength and heat-dissipating characteristics such as aluminum.

[0048] A cylinder head 55 is secured to the second end 52b of the cylindrical housing 51. The cylinder head 55 secures a valve assembly 56 on the second end 52b of the cylindrical housing 51 via mechanical fasteners. The cylinder head 55 also houses an unloader cap 59 positioned above the valve assembly 56. The unloader cap 59 houses an unloader piston 78 that is pneumatically operated by air piloted through the unloader cap 59 mechanically fastened to the top of the cylinder head 55. A lubrication free seal between the unloader piston 78 and the unloader cap 59 separates the process pressurized air within the inlet portion of the cylinder head 55 from the pressurized air (pilot air) within the unloader system. The unloader piston 78 functions to hold the inlet side of the valve assembly 56 open when air pressure is applied to pilot ports 80a, 80b of the unloader cap 59. During this period of operation, the compressor 10 can rotate without delivering compressed air to the compressor discharge. The cylinder head 55 includes a first air channel 58a and a second air channel 58b. The cylinder head 55 may be formed of any suitable material providing sufficient strength and heat transfer characteristics such as aluminum.

[0049] Referring to FIGS. 9-11, the first piston cylinder 20 further includes a first piston 61 that is reciprocally operable within the cylindrical housing 21. The piston 61 includes a first end 62a and a second end 62b, and is made of any suitable material providing sufficient strength and heat transfer characteristics such as aluminum. The piston 61 is operatively connected to the crankshaft assembly 60 via a connecting rod 63. In operation, the piston 61 operates in a reciprocating movement which is generated via rotation of the crankshaft

assembly **60**. Air is drawn into the cylindrical housing **21** of the first piston cylinder **20** via one of the air channels **28a, 28b** as a result of the downward movement of the piston **61**. A valve assembly **26** includes a portion that is opened during the downward movement of the piston **61**, drawing air into the cylindrical housing **21**, and closes during the upward movement. Further, the valve assembly has another portion that closes during the downward movement of the piston **61** and opens during the upward movement of the piston **61**, whereby air in the cylindrical housing **21** is compressed and is guided out of the cylindrical housing **21** via one of the air channels **28a, 28b**.

[0050] The second piston cylinder **30** further includes a second piston **64** that is reciprocally operable within the cylindrical housing **31**. The piston **61** includes a first end **65a** and a second end **65b**, and is made of any suitable material providing sufficient strength and heat transfer characteristics such as aluminum. The piston **64** is operatively connected to the crankshaft assembly **60** via a connecting rod **66**. In operation, the piston **64** operates in a reciprocating movement which is generated via rotation of the crankshaft assembly **60**. Air is drawn into the cylindrical housing **31** of the second piston cylinder **30** via one of the air channels **38a, 38b** as a result of the downward movement of the piston **64**. A valve assembly **36** includes a portion that is opened during the downward movement of the piston **64**, drawing air into the cylindrical housing **31**, and closes during the upward movement. Further, the valve assembly has another portion that closes during the downward movement of the piston **64** and opens during the upward movement of the piston **64**, whereby air in the cylindrical housing **31** is compressed and is guided out of the cylindrical housing **31** via one of the air channels **38a, 38b**.

[0051] The third piston cylinder **40** further includes a third piston **67** that is reciprocally operable within the cylindrical housing **41**. The piston **67** includes a first end **68a** and a second end **68b**, and is made of any suitable material providing sufficient strength and heat transfer characteristics such as aluminum. The piston **67** is operatively connected to the crankshaft assembly **60** via a connecting rod **69**. In operation, the piston **67** operates in a reciprocating movement which is generated via rotation of the crankshaft assembly **60**. Air is drawn into the cylindrical housing **41** of the third piston cylinder **40** via one of the air channels **48a, 48b** as a result of the downward movement of the piston **67**. A valve assembly **46** includes a portion that is opened during the downward movement of the piston **67**, drawing air into the cylindrical housing **41**, and closes during the upward movement. Further, the valve assembly has another portion that closes during the downward movement of the piston **67** and opens during the upward movement of the piston **67**, whereby air in the cylindrical housing **41** is compressed and is guided out of the cylindrical housing **41** via one of the air channels **48a, 48b**.

[0052] The fourth piston cylinder **50** further includes a fourth piston **70** that is reciprocally operable within the cylindrical housing **51**. The piston **70** includes a first end **71a** and a second end **71b**, and is made of any suitable material providing sufficient strength and heat transfer characteristics such as aluminum. The piston **70** is operatively connected to the crankshaft assembly **60** via a connecting rod **72**. In operation, the piston **70** operates in a reciprocating movement which is generated via rotation of the crankshaft assembly **60**. Air is drawn into the cylindrical housing **51** of the fourth piston cylinder **50** via one of the air channels **58a**, **58b** as a result of the downward movement of the piston **70**. A valve assembly **56** includes a portion that is opened during the downward movement of the piston **70**, drawing air into the cylindrical housing **51**, and closes during the upward movement. Further, the valve assembly has another portion that closes during the downward movement of the piston **70** and opens during the upward movement of the piston **70**, whereby air in the cylindrical housing **51** is compressed and is guided out of the cylindrical housing **51** via one of the air channels **58a**, **58b**.

[0053] The air compressor **10** experiences improved compressor housing **12** ventilation due to the increased displacement of compressor housing **12** volume without compromising the added benefits of improved torque pulse and dynamic balance for the air compressor **10**. In one aspect, the compressor housing **12** displaces an amount of air that is approximately 72% of the swept volume of the air compressor **10** during every rotation of the crankshaft assembly **60**. This creates an effective cooling of the air compressor **10** by forcing fresh air in and out of the air compressor **10** for the purpose of cooling the internal components of the air compressor **10** during operation. Some of the preexisting air compressors that are designed to reduce torque pulse and minimize inertial vibrations have a much less favorable compressor housing **12** displacement to swept volume ratio, which means that the amount of cooling air available to the internal components is reduced. It may even be reduced to the point where this type of cooling is not effective for reliable air compressor operation. Other preexisting air compressors also sacrifice torque pulse and balance control in favor of a larger internal displacement. By using the configuration of the present air compressor **10**, there is no need to use compressor inlet air to cool the compressor housing **10**. This type of cooling configuration used with preexisting air compressors reduces compressor efficiency, increases operating air temperatures, and can cause the compressor housing **12** temperature to increase during unloaded operation.

[0054] The air compressor **10** further includes a cooling fan **73**. The cooling fan **73** is operatively connected to the crankshaft assembly **60** of the air compressor **10**. The rotation of the crankshaft assembly **60** rotates the cooling fan **73** which creates a flow path **74** that extends

perpendicular to the first piston cylinder **20**, the second piston cylinder **30**, the third piston cylinder **40**, and the fourth piston cylinder **50**. The cooling fan **73** provides cooling ventilation to the piston cylinders. In one aspect, the perpendicular flow path **74** created by the cooling fan **73** provides ventilation to each of the piston cylinders because the first piston cylinder **20**, the second piston cylinder **30**, the third piston cylinder **40**, and the fourth piston cylinder **50** are each positioned behind the cooling fan **73** in the perpendicular flow path **74**. The radial arrangement of the piston cylinders allows for cooling from the cooling fan **73** to directly flow over each piston cylinder. This is an improvement over preexisting air compressors that include horizontally opposed piston cylinders, wherein a flow path of a cooling fan that extends across the piston cylinders is partially or completely blocked from cooling piston cylinders positioned in the back of the air compressor. When the piston cylinders of an air compressor are positioned behind one another, the cooling flow path of the cooling fan does not reach each of the piston cylinders. The air compressor **10** of the air compressor solves this problem. The radial configuration of the first piston cylinder **20**, the second piston cylinder **30**, the third piston cylinder **40**, and the fourth piston cylinder **50** also allows for a greater portion of each piston cylinder to be located within the flow path **74** of the cooling fan **73**. It is also contemplated that the cooling fan **73** may be clutch-operated to optimize the cooling of the air compressor **10**.

[0055] By using the configuration of the air compressor **10** described hereinabove, the overall dimensions are reduced as compared to preexisting air compressors. Without the piston cylinders positioned side by side in the longitudinal direction along the compressor housing **12**, the longitudinal length of the air compressor **10** is reduced as compared to preexisting air compressors. By banking the first piston cylinder **20** and the fourth piston cylinder **50** at 18 degrees from the horizontal **14** of the air compressor **10**, the width of the air compressor **10** is smaller as compared to air compressors with horizontally positioned piston cylinders. Further, by positioning the first piston cylinder **20** and the fourth piston cylinder **50** at 18 degrees from the horizontal **14** of the air compressor **10**, the height of the air compressor **10** is reduced as compared to preexisting air compressors, especially an air compressor with a "W" configuration for the piston cylinders.

[0056] With reference to **FIGS. 12-17**, the connecting rods **63**, **66**, **69**, **72** are described in greater detail. Although the description is provided in relation to connecting rod **63**, it is to be understood that the remaining connecting rods **66**, **69**, **72** are configured similarly to connecting rod **63**. The connecting rod **63** includes a rod member **100**, a crank pin receiving end **102** provided on one end of the rod member **100**, and a wrist pin receiving end **104** provided on an opposing end of the rod member **100**. The rod member **100** may be substantially rectangular

and extends between the crank pin receiving end **102** and the wrist pin receiving end **104**. The crank pin receiving end **102** and the wrist pin receiving end **104** are substantially circular and define a crank pin receiving bore **106** and a wrist pin receiving bore **108**, respectively. Once assembled, the crank pin of the crankshaft assembly **60** is inserted through the crank pin receiving bore **106** and the wrist pin of the first piston assembly **61** is inserted through the wrist pin receiving bore **108** of the connecting rod **63**.

[0057] The connecting rod **63** may be provided as two separate portions **110, 112**. The first portion **110** may include the rod member **100** and the wrist pin receiving end **104**. The second portion **112** may include the crank pin receiving end **102**. The first portion **110** and the second portion **112** may be split at a separation line **114**. The rod member **100** and the wrist pin receiving end **104** may be positioned above the separation line **114**, and the crank pin receiving end **102** may be positioned below the separation line **114**. The separation line **114** is positioned between the rod member **100** and the crank pin receiving end **102**, which is provided at a position higher than where typical connecting rods are split. A first base portion **101** may extend from a top surface of the crank pin receiving end **102**. A second base portion **103** may extend from a bottom surface of the rod member **100**. The separation line **114** may be established between the first base portion **101** and the second based portion **103**. At least two studs **118** may extend from the top surface of the second portion **112**. The studs **118** may be received in corresponding apertures on the first portion **110**. Locking nuts **120** may be threaded onto the ends of the studs **118** to lock the first portion **110** onto the second portion **112**. It is also contemplated that the first portion **110** and the second portion **112** may be bolted together at the separation line **114**. As shown in **FIG. 15**, a pair of bolts **131** may be provided to connect the two portions **110, 112**. The bolts **131** may be threaded into apertures **133** defined in the second portion **112**. As shown in **FIG. 14**, at least one locating pin **119** may be provided on an upper surface of the second portion **112**. In one aspect, two locating pins **119** may be provided on the second portion **112**. The locating pins **119** may be inserted into corresponding apertures defined in the first portion **110**. The locating pins **119** assist in aligning the first portion **110** and the second portion **112** relative to one another to connect the two portions **110, 112** with the studs **118** and locking nuts **120**.

[0058] As shown in **FIGS. 12** and **13**, prior art connecting rods are typically split at dotted separation line **116**. This separation line **116** extends through the center of the crank pin receiving end **102**. By splitting the connecting rod **63** above the crank pin receiving end **102** in the present disclosure, a single piece bearing (without a split) of any type (plain, roller, ball, etc.) can be sealed with sealing elements that are also not split within the crank pin receiving

end **102**. The prior art connecting rods do not provide this feature since the separation line **116** extends through the crank pin receiving end **102**, creating the need for a split bearing and sealing elements. The single piece, or non-split design, of the crank pin receiving end **102** greatly simplifies the design of the connecting rod **63** and improves the life-long lubrication of the bearing in the crank pin receiving end **102**. This design adds more simplicity than typical designs as tight tolerances between the two portions of the crank end are not necessary and standard bearings can be utilized. By eliminating the separation line **116** within the crank pin receiving end **102**, a sealing surface is also eliminated, thereby creating less paths for lubricating grease to escape from the bearing.

[0059] As shown in **FIGS. 16** and **17**, a variety of bearings may be provided in the connecting rod **63**. A wrist pin bearing **122** may be provided in the wrist pin receiving bore **108**. The wrist pin bearing **122** may be sealed in the wrist pin receiving bore **108** using a wrist pin bearing seal **124**. Likewise, a crank pin bearing **126** may be provided in the crank pin receiving bore **106**. The crank pin bearing **126** may be sealed in the crank pin receiving bore **106** using a crank pin bearing seal **128**. The crank pin bearing **126** and the wrist pin bearing **122** may be any type of bearing, including plain, roller, and ball, among others. A first grease fitting **130** may be provided in the crank pin receiving end **102**. The first grease fitting **130** is configured to supply lubrication to the crank pin bearing **126**. Likewise, a second grease port location and second grease fitting **132** may be provided in the rod member **100**. The second grease fitting may be configured to supply lubrication to the wrist pin bearing **122**.

[0060] The connecting rod **63** provides several design concepts that improve the ease of assembly of the connecting rod **63** and the air compressor **10** maintainability. The single piece crank pin receiving end **102** allows the crank pin bearing **126** and crank pin bearing seal **128** to be assembled as a complete subassembly prior to the assembly onto the crankshaft assembly **60**. The split connecting rod **63** also allows for the replacement of the first portion **110** and the second portion **112** independently of one another. This replacement cannot be done in air compressors with single piece connecting rods as are often used in oil-free compressors. With single piece connecting rods, it is typically necessary to remove the entire connecting rod from the compressor to replace the wrist pin bearing. This means that the crank pin bearing must be disturbed and often requires the entire crankshaft assembly to be removed, which is often more complex and requires expensive maintenance. Since special tools are required for this maintenance, this is often a task that cannot be completed in the field by an end user. The split connecting rod **63** allows the first portion **110** to be removed without disturbing the crank pin

bearing **126**. It also simplifies the process for the end user. Similarly, the second portion **112** may be removed without disturbing the wrist pin bearing **122**.

[0061] Further, the connecting rod **63** is manufactured such that the first portion **110** and the second portion **112** are not a married pair. Therefore, any first portion **110** and any second portion **112** may be combined to assemble a single connecting rod **63**. This allows for the supply of a first portion **110** including a new sealed and greased wrist pin that can be installed to any second portion **112** already mounted in the air compressor **10**. Traditional split connecting rods are married pairs in which the crank pin receiving end and the wrist pin receiving end of the connecting rods are machined as a single unit and then split through the center of the crank pin receiving end. The connecting rod must always remain together as a pair. By moving the separation line **114** above the crank pin receiving end **102** and utilizing locating pins **119**, the first portion **110** and the second portion **112** do not need to be maintained as a married pair. This feature allows for a complete wrist pin receiving end **104** kit (wrist pin receiving end with a new wrist pin, piston assembly, and, optionally, a cylinder assembly) to be supplied as a field installed mid-life overhaul.

[0062] A method of re-greasing the crank pin bearing **126** during its lifetime is described below. Traditional deep groove single row ball bearings do not contain a greasing groove or port to allow re-greasing once in service like some roller, spherical, needle, and double row ball bearings. Lip-sealed bearings require a seal to be removed to resupply grease to the bearing. In the present connecting rod **63**, the crank pin bearing **126** is sealed with externally installed crank pin bearing seals **128** (or shields). To allow for a greater grease cavity and means to install grease, a pair of spacer rings **134**, **135** (**FIG. 16**) are installed between the crank pin bearing **126** and the crank pin bearing seal **128**. The spacer rings **134**, **135** may be placed on one or both sides of the crank pin bearing **126**. The inner spacer ring **134** includes a lip that retains the position of the inner spacer ring **134** during assembly. The outer spacer ring **135** includes slots to allow grease to pass around the outer spacer ring **135** and into the crank pin bearing **126**. The first grease fitting **130** may be aligned in fluid communication with the outer spacer ring **135**.

[0063] Using this connecting rod **63** assembly, the second portion **112** can be built complete with a bearing, spacers, seals, and grease prior to installation on the compressor crankshaft assembly **60**. Once installed, it can be maintained by adding grease to the crank pin bearing **126** to replace any grease that has been lost through the crank pin bearing seal **128** at the air compressor **10** mid-life when the first portion **110** is overhauled. As previously mentioned, maintenance and overhaul of the first portion **110** is permitted by the split connecting rod **63**.

[0064] While an aspect of a radially configured oil-free compressor is shown in the accompanying figures and described hereinabove in detail, other aspects will be apparent to, and readily made by, those skilled in the art without departing from the scope and spirit of the invention. Accordingly, the foregoing description is intended to be illustrative rather than restrictive. The invention described hereinabove is defined by the appended claims and all changes to the invention that fall within the meaning and the range of the equivalency of the claims are to be embraced within their scope.

What is claimed is:

1. An oil-free compressor for a rail vehicle, comprising:

a compressor housing; a support member fastened to a bottom surface of the compressor housing to mount the compressor to the rail vehicle;

a first low pressure piston cylinder supported in the compressor housing;

a second low pressure piston cylinder supported in the compressor housing;

a first high pressure piston cylinder supported in the compressor housing;

a second high pressure piston cylinder supported in the compressor housing; and

a crankshaft assembly supported by the compressor housing and linked to pistons of the piston cylinders by respective connecting rods;

wherein the first and second low pressure piston cylinders and the first and second high pressure piston cylinders are positioned in an X-shaped configuration around an outer circumference of the compressor housing;

wherein two of the first and second low pressure piston cylinders and the first and second high pressure piston cylinders are configured as first and second lower legs of the X-shaped configuration and two of the first and second low pressure piston cylinders and the first and second high pressure piston cylinders are configured as first and second upper legs of the X-shaped configuration;

wherein the first and second lower legs of the X-shaped configuration are positioned below a horizontal plane passing through a longitudinal axis of the crankshaft assembly and the first and second upper legs of the X-shaped configuration are positioned above the horizontal plane; and wherein the first and second lower legs of the X-shaped configuration project outward and downward from the compressor housing to lie angularly between the horizontal plane and the support member.

2. The oil-free compressor as claimed in claim 1, wherein the first and second high pressure piston cylinders are configured as the first and second lower legs of the X-shaped configuration, and the first and second low pressure piston cylinders are configured as the first and second upper legs of the X-shaped configuration.

Date Reçue/Date Received 2020-05-06

3. The oil-free compressor as claimed in claim 1, wherein an angular distance between the two lower legs of the X-shaped configuration is greater than the distance between the two upper legs of the X-shaped configuration.

4. The oil-free compressor as claimed in claim 1, wherein the X-shaped configuration is non-symmetrical about the horizontal plane passing through the longitudinal axis of the crankshaft assembly.

5. The oil-free compressor as claimed in claim 1, wherein the X-shaped configuration is symmetrical about a vertical plane passing through the longitudinal axis of the crankshaft assembly.

6. The oil-free compressor as claimed in claim 2, wherein an angular distance between the first high pressure piston cylinder and the first low pressure piston cylinder, an angular distance between the first low pressure piston cylinder and the second low pressure piston cylinder, and an angular distance between the second low pressure piston cylinder and the second high pressure piston cylinder are equal to one another.

7. The oil-free compressor as claimed in claim 2, wherein the first and second high pressure piston cylinders are positioned below the horizontal plane passing through t h e longitudinal axis of the crankshaft assembly.

8. The oil-free compressor as claimed in claim 1, an angular distance between the two lower legs of the X-shaped configuration is less than a sum of an angular distance between the first lower and the first upper leg, an angular distance between the first upper leg and the second upper leg, and an angular distance between the second upper leg and the second lower leg of the X-shaped configuration.

9. The oil-free compressor as claimed in claim 1, wherein the compressor housing has a pentagonal cross-sectional shape.

Date Reçue/Date Received 2020-05-06

10. An oil-free compressor for a rail vehicle, comprising:

a compressor housing; a support member fastened to a bottom surface of the compressor housing to mount the compressor to the rail vehicle;

a first low pressure piston cylinder supported in the compressor housing;

a second low pressure piston cylinder supported in the compressor housing;

a first high pressure piston cylinder supported in the compressor housing;

a second high pressure piston cylinder supported in the compressor housing;

a crankshaft assembly supported by the compressor housing and linked to pistons of the piston cylinders by respective connecting rods; and

a cooling fan operatively connected to the crankshaft assembly;

wherein the first and second low pressure piston cylinders and the first and second high pressure piston cylinders are positioned in an X-shaped configuration around an outer circumference of the compressor housing;

wherein two of the first and second low pressure piston cylinders and the first and second high pressure piston cylinders are configured as first and second lower legs of the X-shaped configuration and two of the first and second low pressure piston cylinders and the first and second high pressure piston cylinders are configured as first and second upper legs of the X-shaped configuration;

wherein the first and second lower legs of the X-shaped configuration are positioned below a horizontal plane passing through a longitudinal axis of the crankshaft assembly and the first and second upper legs of the X-shaped configuration are positioned above the horizontal plane; and

wherein the first and second lower legs of the X-shaped configuration project outward and downward from the compressor housing to lie angularly between the horizontal plane and the support member.

11. The oil-free compressor as claimed in claim 10, wherein the first and second high pressure piston cylinders are configured as t h e first and second lower legs of the X-shaped configuration, and the first and second low pressure piston cylinders are configured as t h e first and second upper legs of the X-shaped configuration.

Date Reçue/Date Received 2020-05-06

12. The oil-free compressor as claimed in claim 10, wherein an angular distance between the two lower legs of the X-shaped configuration is greater than the distance between the two upper legs of the X-shaped configuration.

13. The oil-free compressor as claimed in claim 10, wherein the X-shaped configuration is non-symmetrical about the horizontal plane passing through the longitudinal axis of the crankshaft assembly.

14. The oil-free compressor as claimed in claim 10, wherein an angular distance between the first high pressure piston cylinder and the first low pressure piston cylinder, an angular distance between the first low pressure piston cylinder and the second low pressure piston cylinder, and an angular distance between the second low pressure piston cylinder and the second high pressure piston cylinder are equal to one another.

15. The oil-free compressor as claimed in claim 10, wherein the X-shaped configuration is symmetrical about a vertical plane passing through the longitudinal axis of the crankshaft assembly.

16. The oil-free compressor as claimed in claim 10, wherein the cooling fan creates a flow path substantially perpendicular to the piston cylinders.

17. The oil-free compressor as claimed in claim 16, wherein each piston cylinder is positioned in the flow path of the cooling fan.

18. The oil-free compressor as claimed in claim 10, wherein the first and second high pressure piston cylinders are positioned below the horizontal plane passing through the longitudinal axis of the crankshaft assembly.

Date Reçue/Date Received 2020-05-06

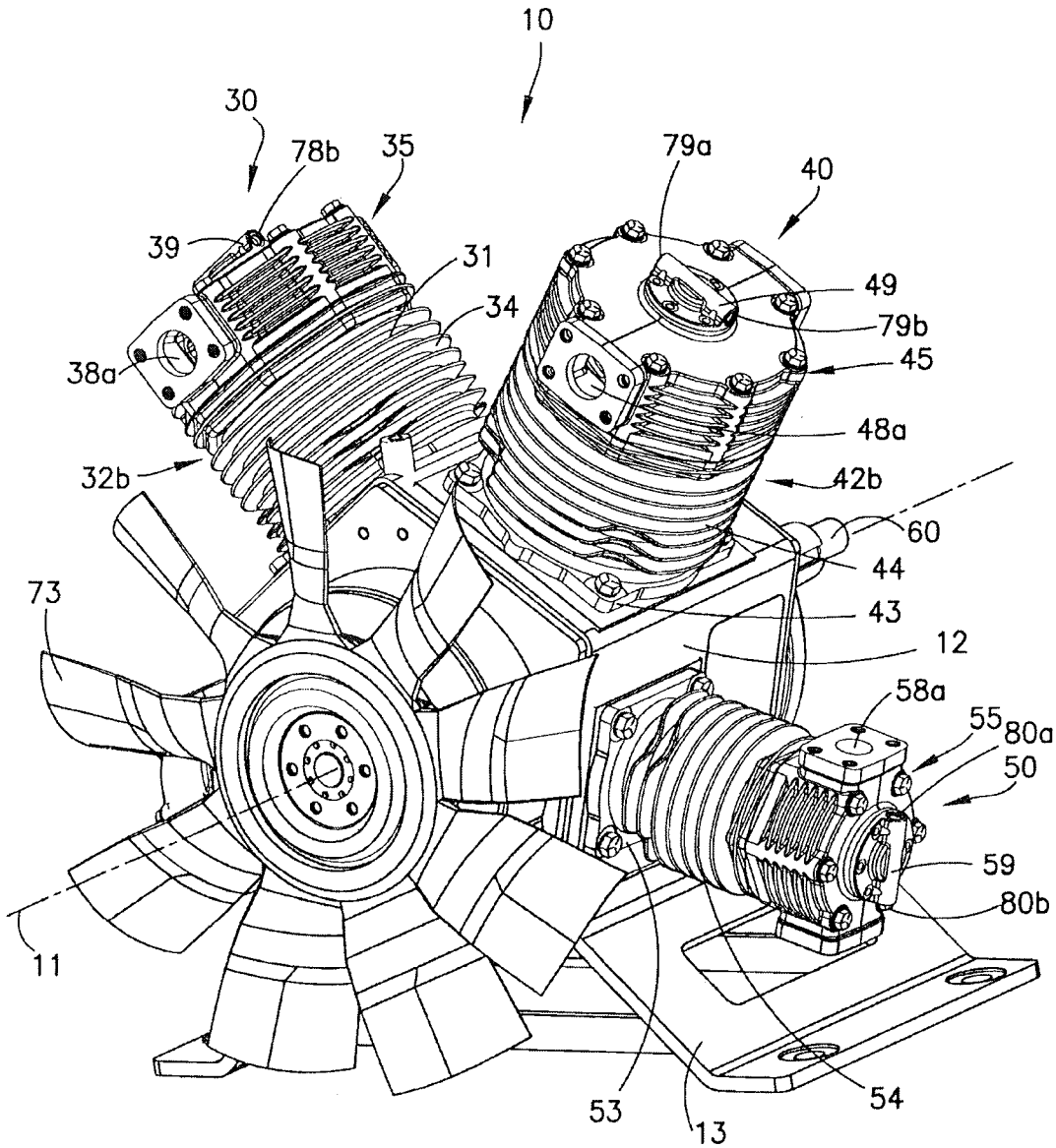
10
30
78b
35
79a
40
39
31
49
34
79b
38a
45
48a
32b
42b
60
44
73
43
12
58a
55
80a
50
59
80b
11
53
13
54

FIG.1

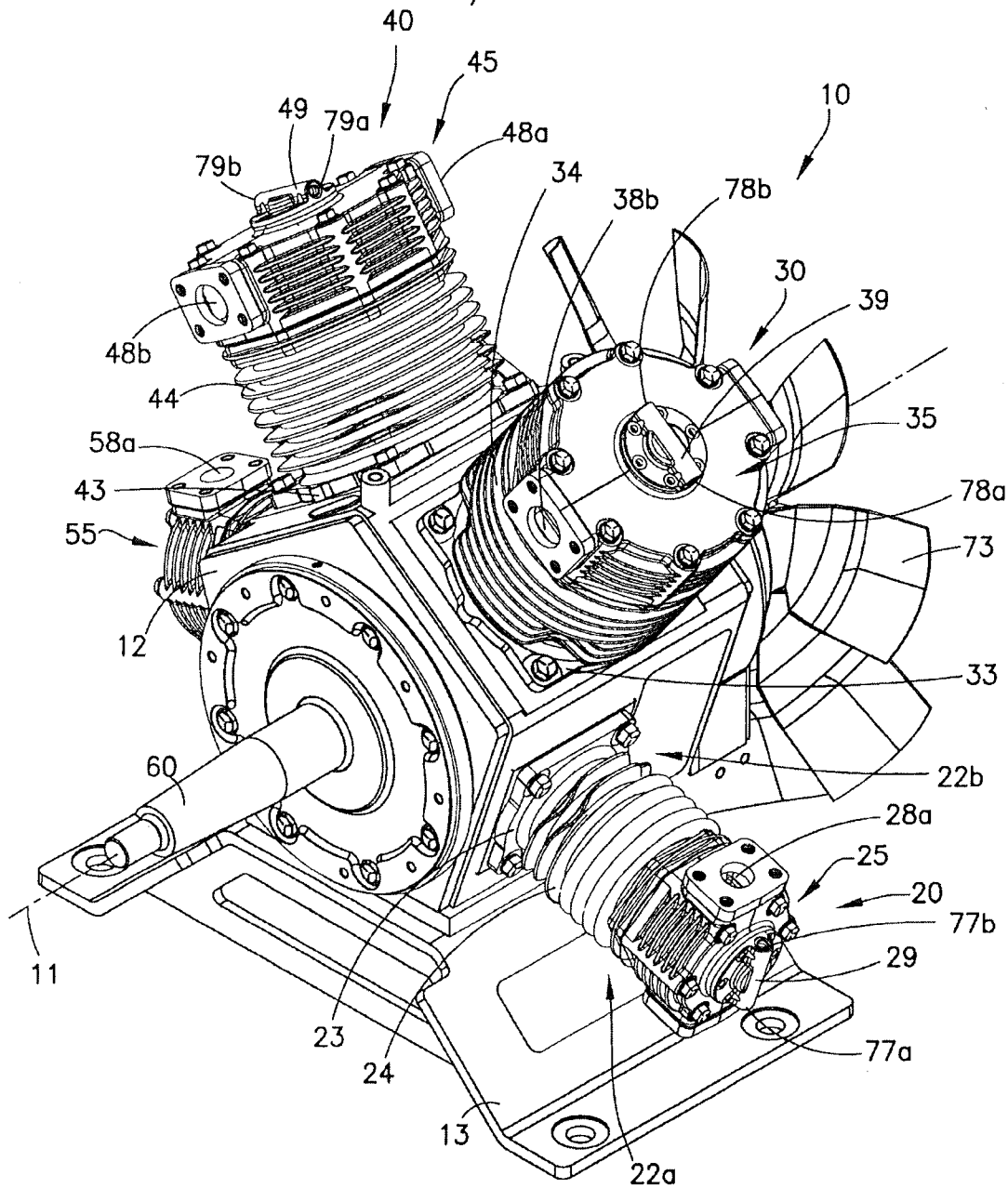
40
45
49
79a
48a
10
79b
34
38b
78b
30
39
48b
44
35
58a
43
78a
55
73
12
33
60
22b
28a
25
20
77b
11
29
23
24
77a
13
22a

FIG.2

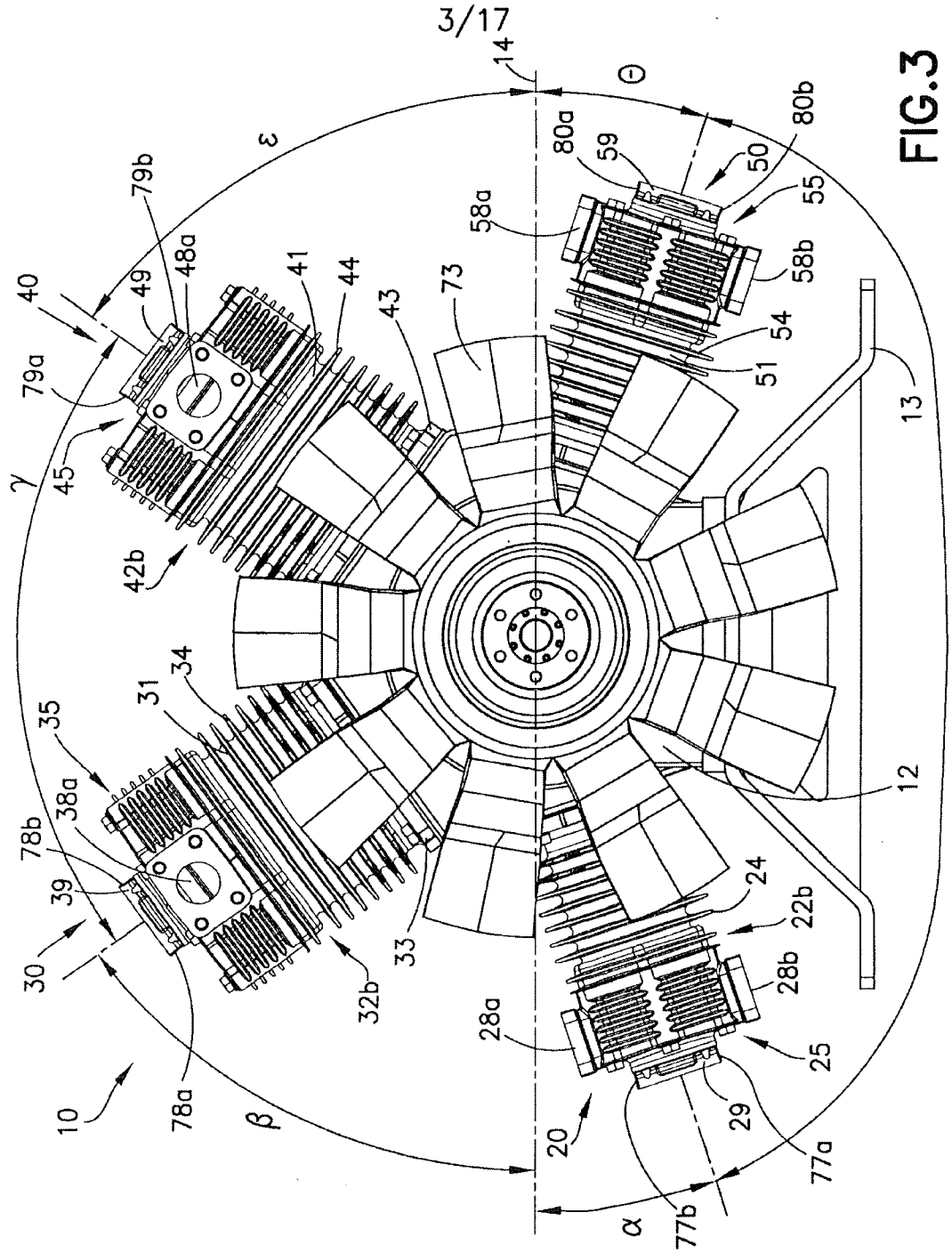
14
Θ
ε
80a
59
50
80b
55
58a
58b
54
51
13
12
Δ
24
22b
28b
25
29
77a
77b
α
20
28a
33
32b
78a
10
30
39
78b
38a
35
31
34
42b
45
γ
79a
40
49
48a
79b
41
44
43
73

FIG.3

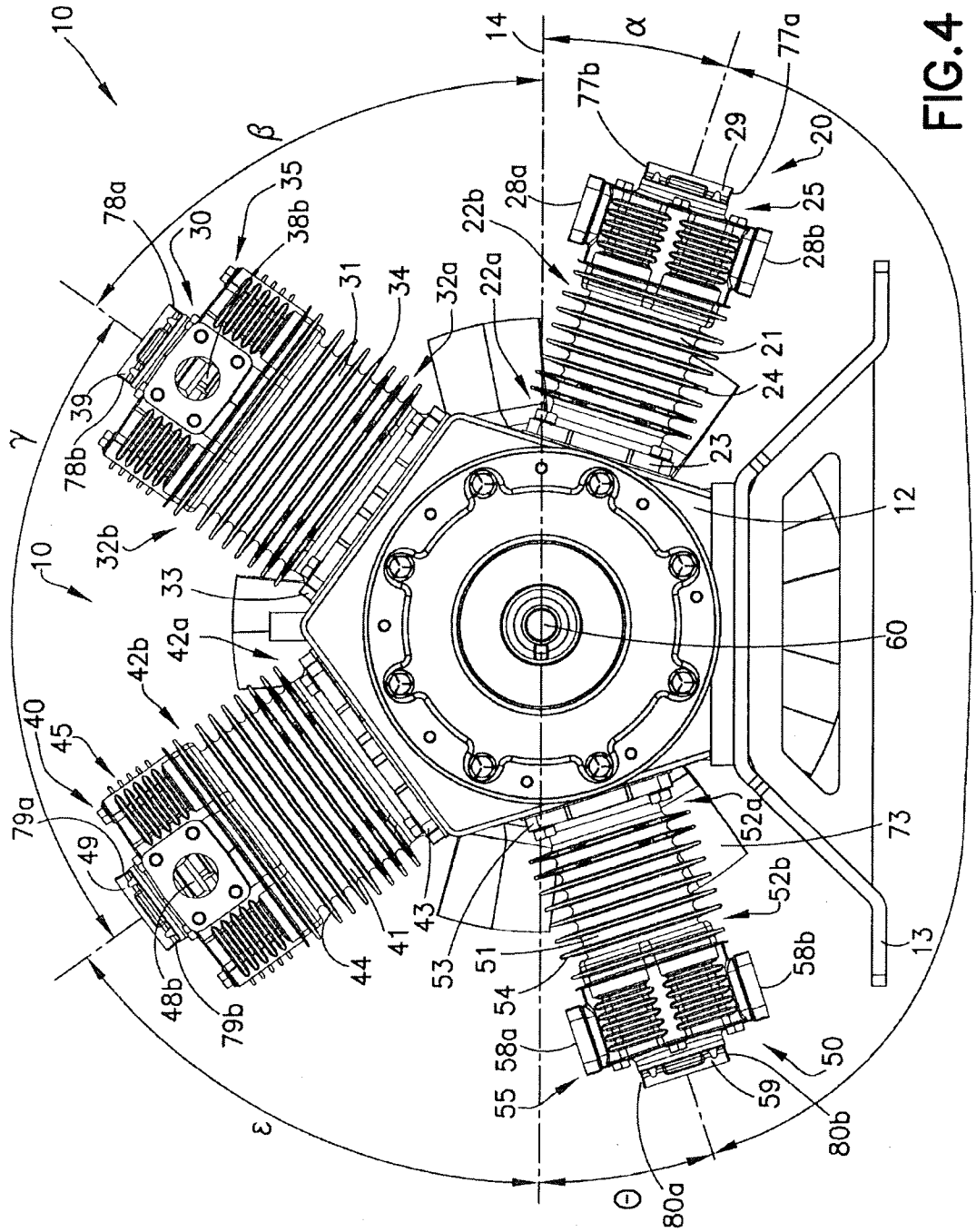
10
14
α
β
γ
ε
Θ
Δ
77a
77b
29
20
25
28a
28b
22b
22a
32a
34
31
35
38b
30
78a
39
78b
32b
33
42a
42b
40
45
79a
49
48b
79b
44
41
43
53
51
54
58a
55
59
80a
80b
50
58b
52b
52a
73
13
60
12
23
24
21

FIG.4

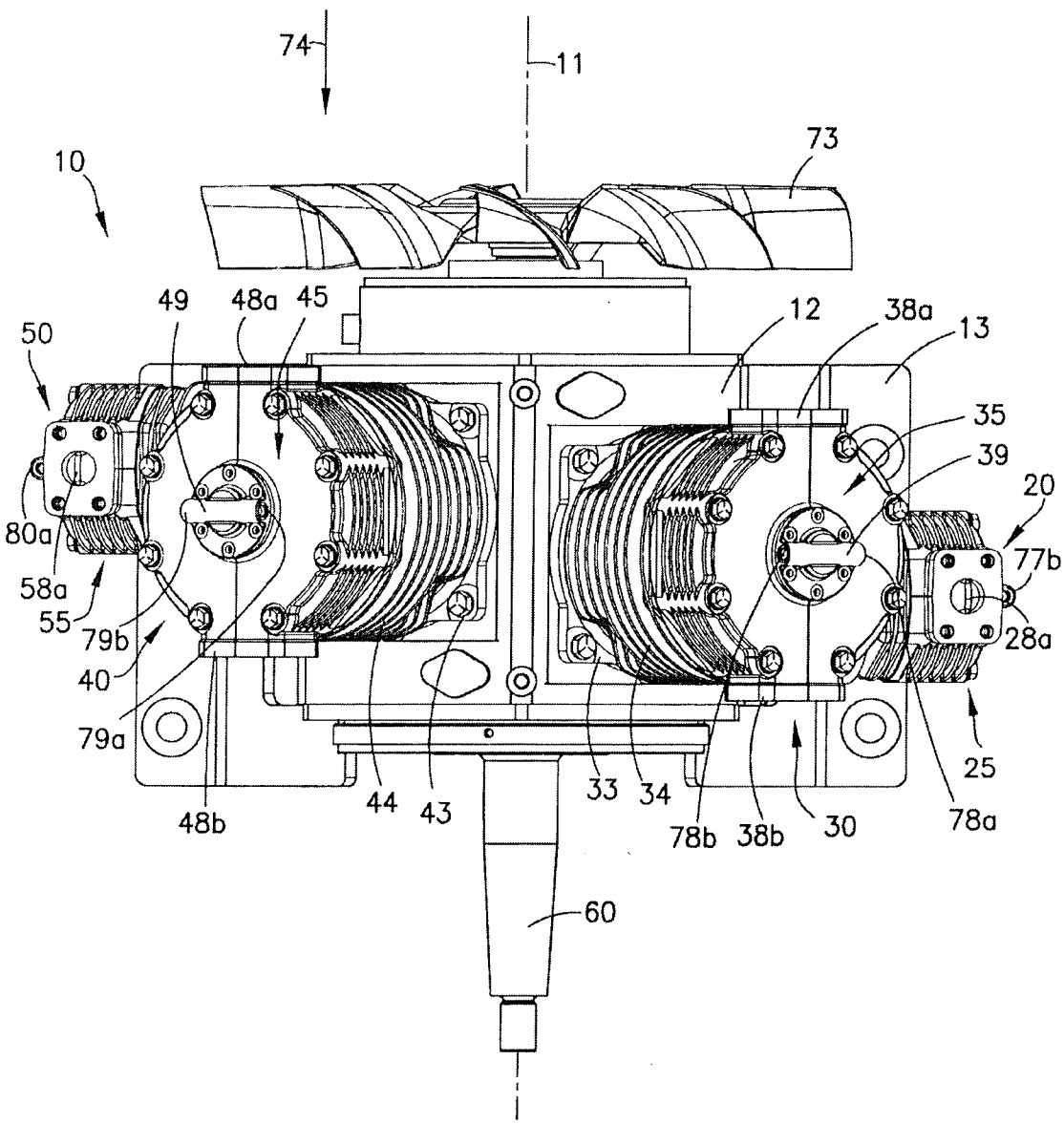
74
11
73
10
49
48a
45
12
38a
13
50
35
39
20
80a
77b
58a
55
79b
28a
40
79a
25
48b
44
43
33
34
78b
38b
30
78a
60

FIG.5

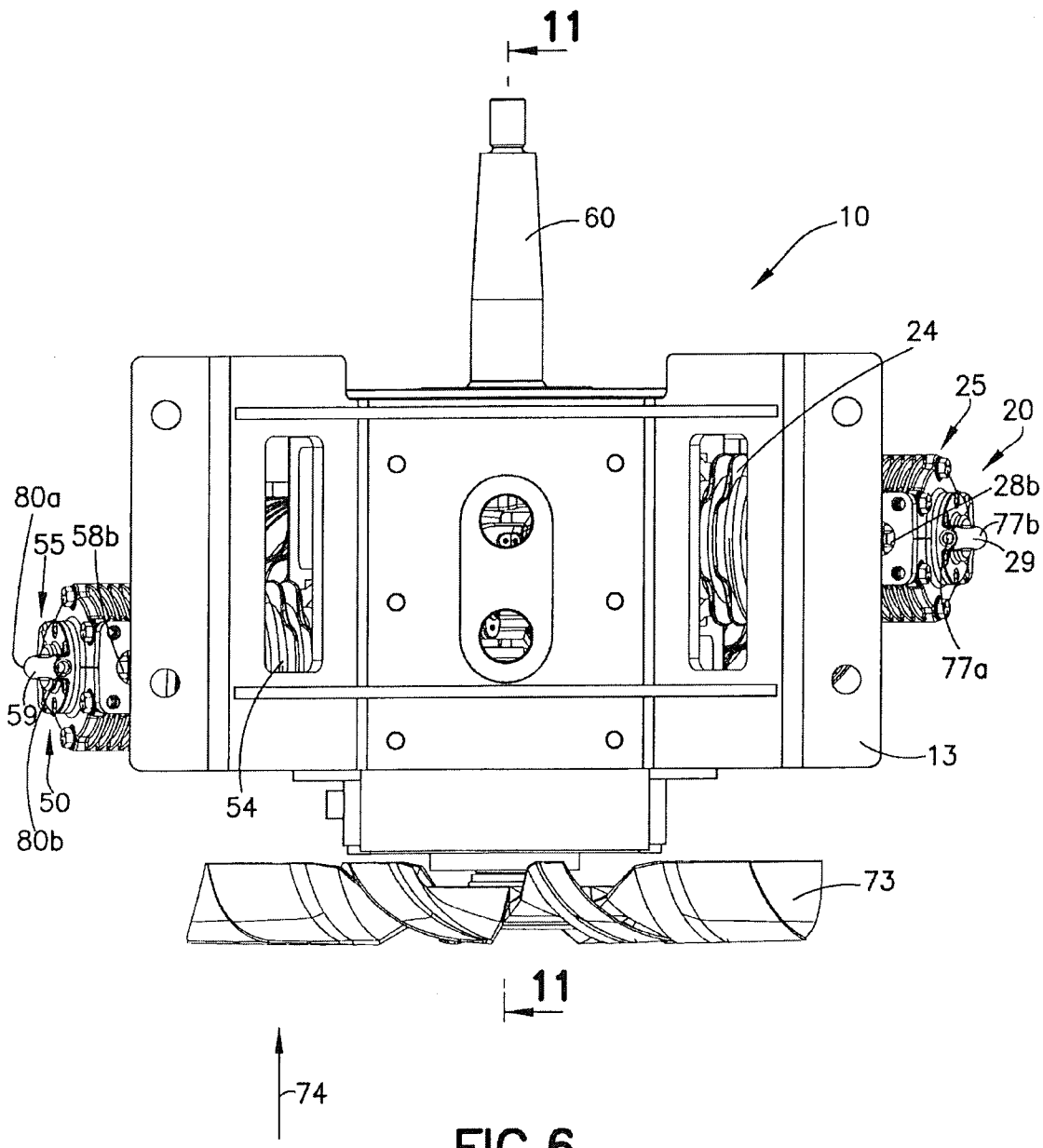

FIG.6

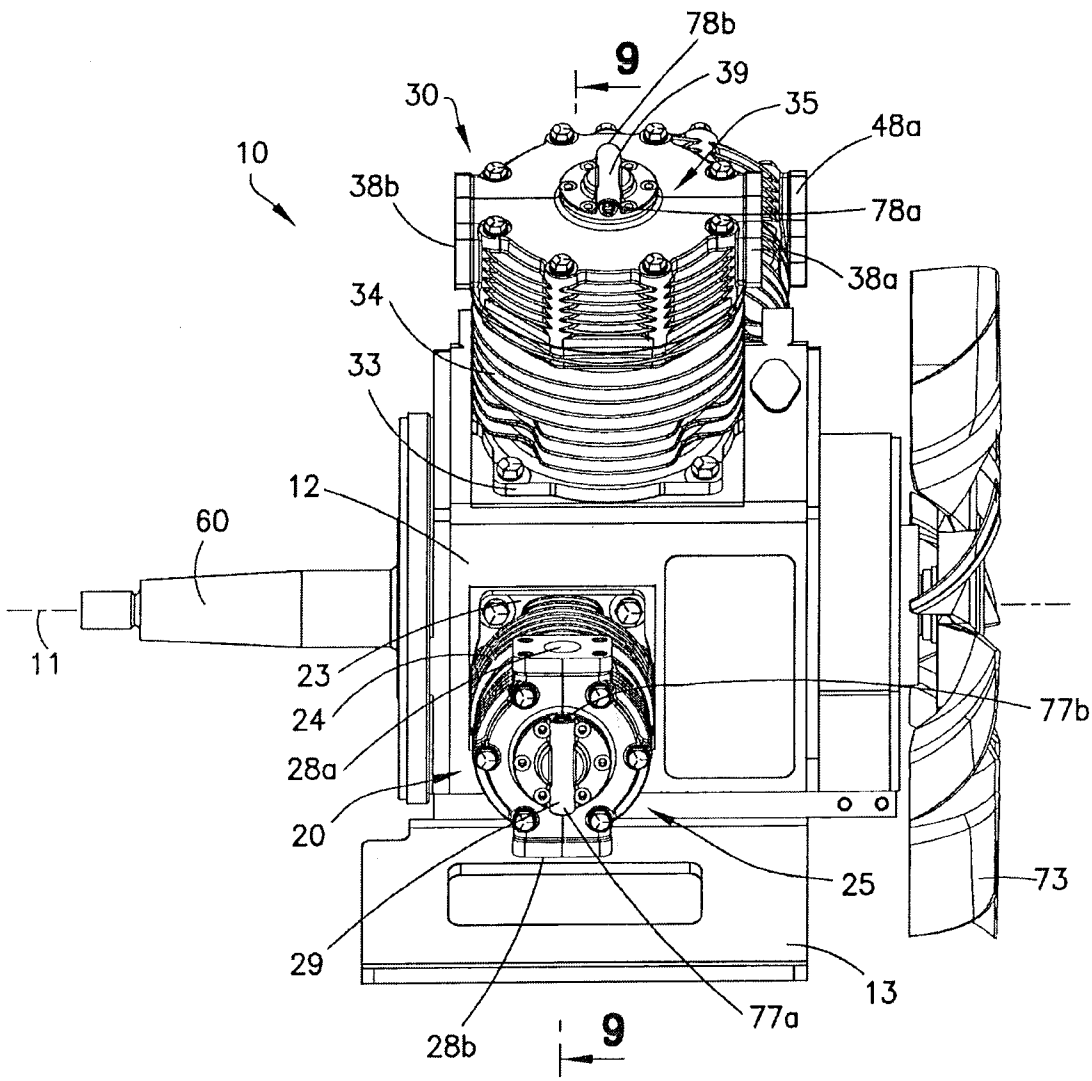
78b
9
39
30
35
48a
10
38b
78a
38a
34
33
12
60
11
23
24
28a
20
77b
25
73
29
13
77a
28b
9

FIG.7

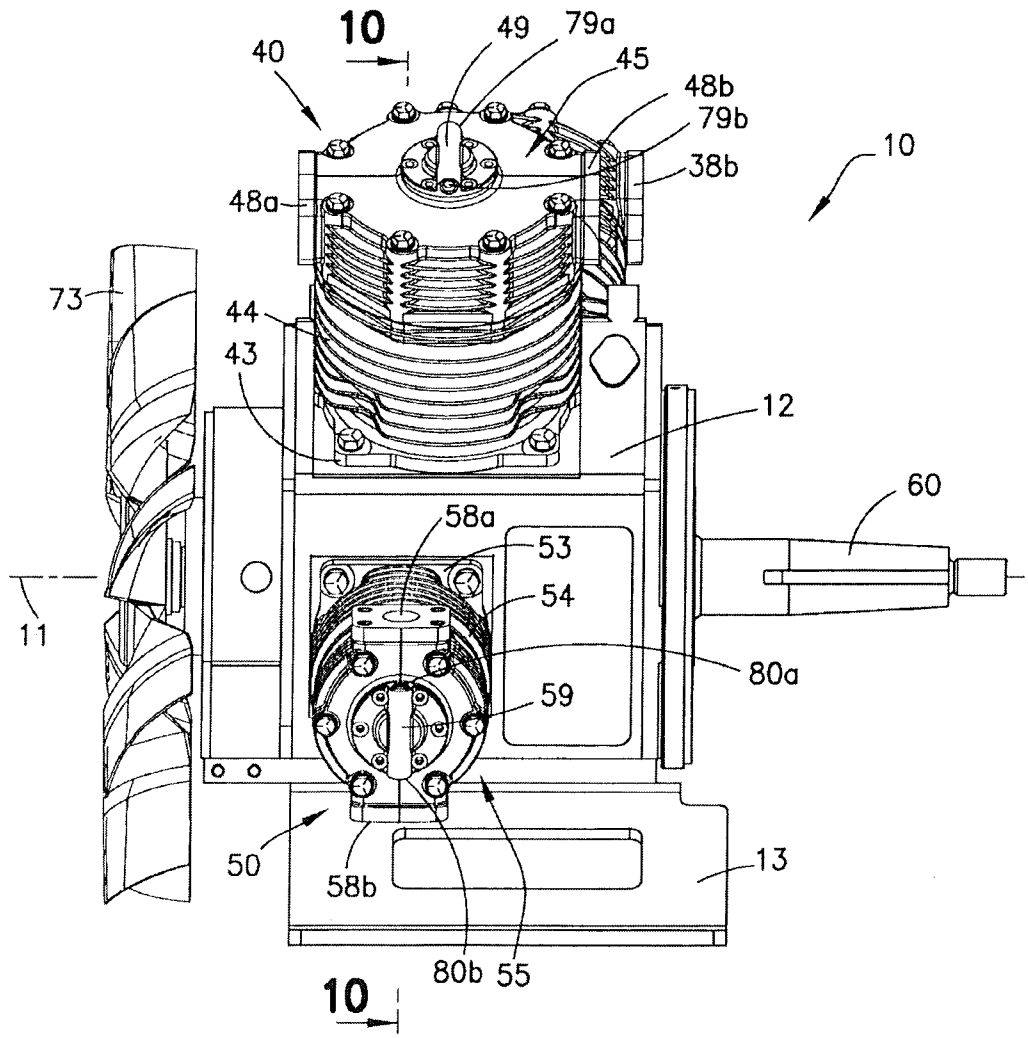
10
49
79a
40
45
48b
79b
10
38b
48a
73
44
43
12
60
58a
53
54
11
80a
59
50
58b
13
80b
55
10

FIG.8

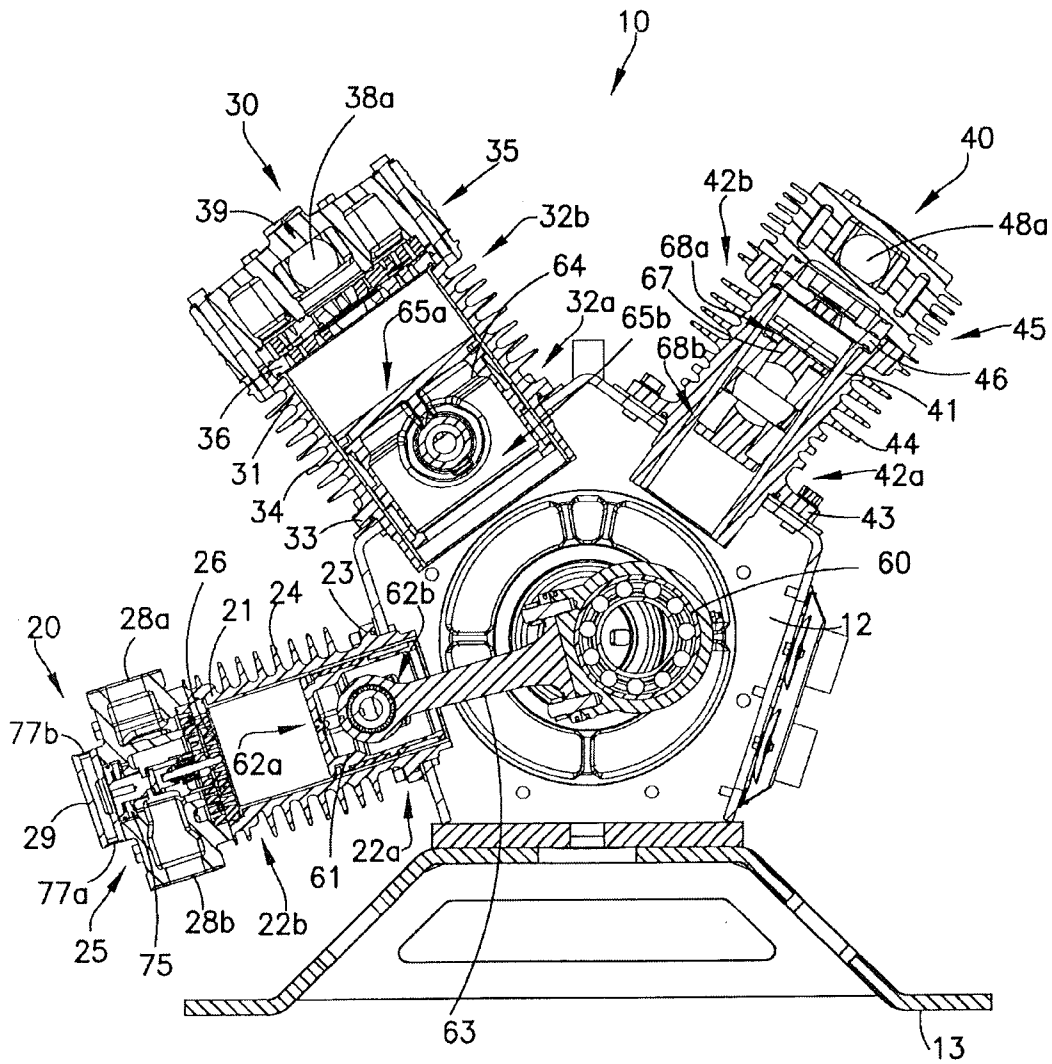
10
30
38a
35
40
42b
39
32b
48a
68a
64
67
32a
65a
65b
45
68b
46
36
41
31
44
34
42a
33
43
26
23
62b
60
20
28a
21
24
12
77b
62a
29
22a
61
77a
28b
22b
25
75
63
13

FIG.9

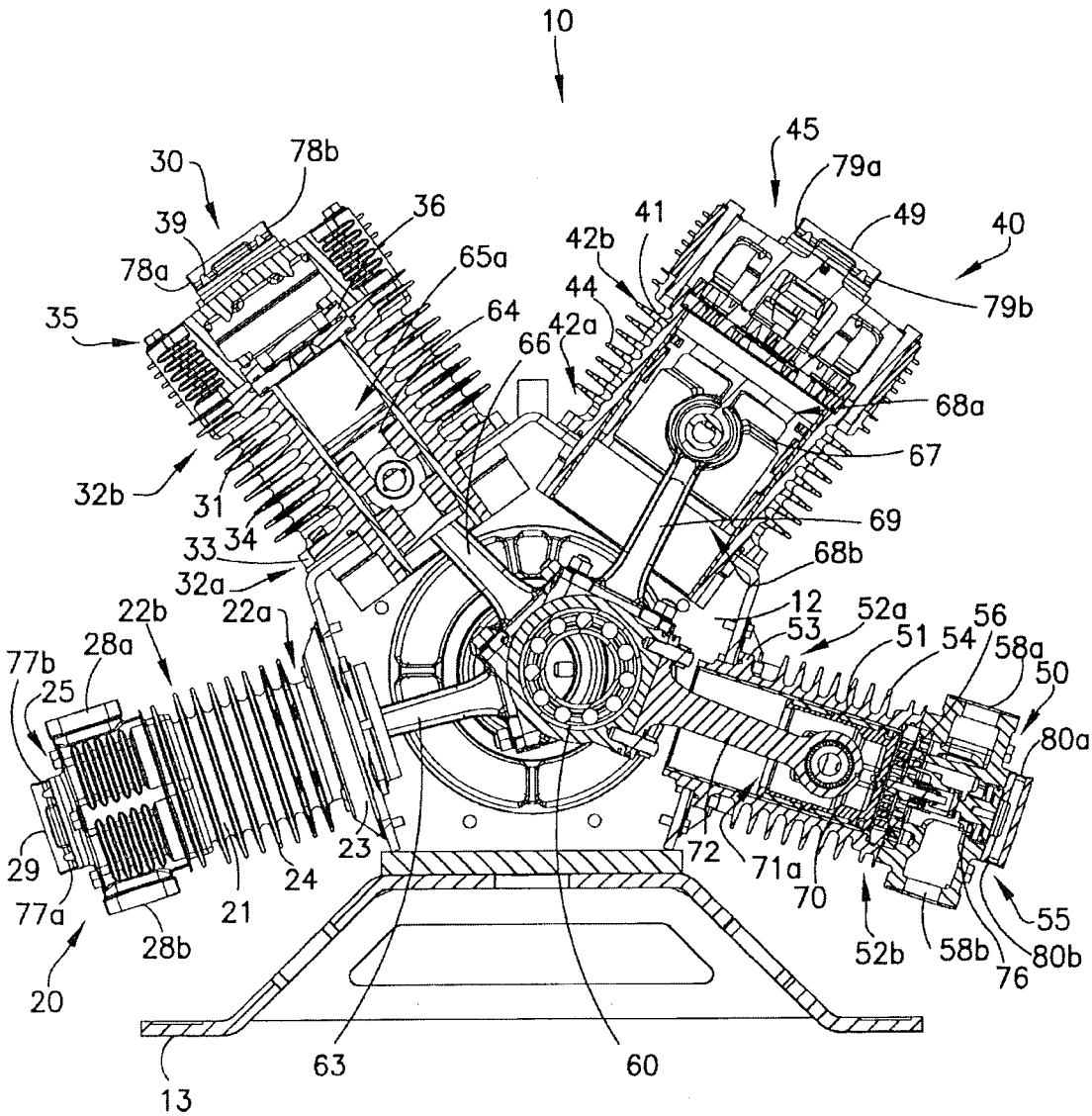
10
30
78b
39
78a
36
65a
35
64
66
42a
44
42b
41
45
79a
49
40
79b
68a
67
69
68b
32b
31
34
33
32a
22b
22a
12
53
52a
51
54
56
58a
50
80a
77b
28a
25
29
77a
28b
20
21
24
23
72
71a
70
52b
58b
76
80b
55
63
60
13

FIG.10

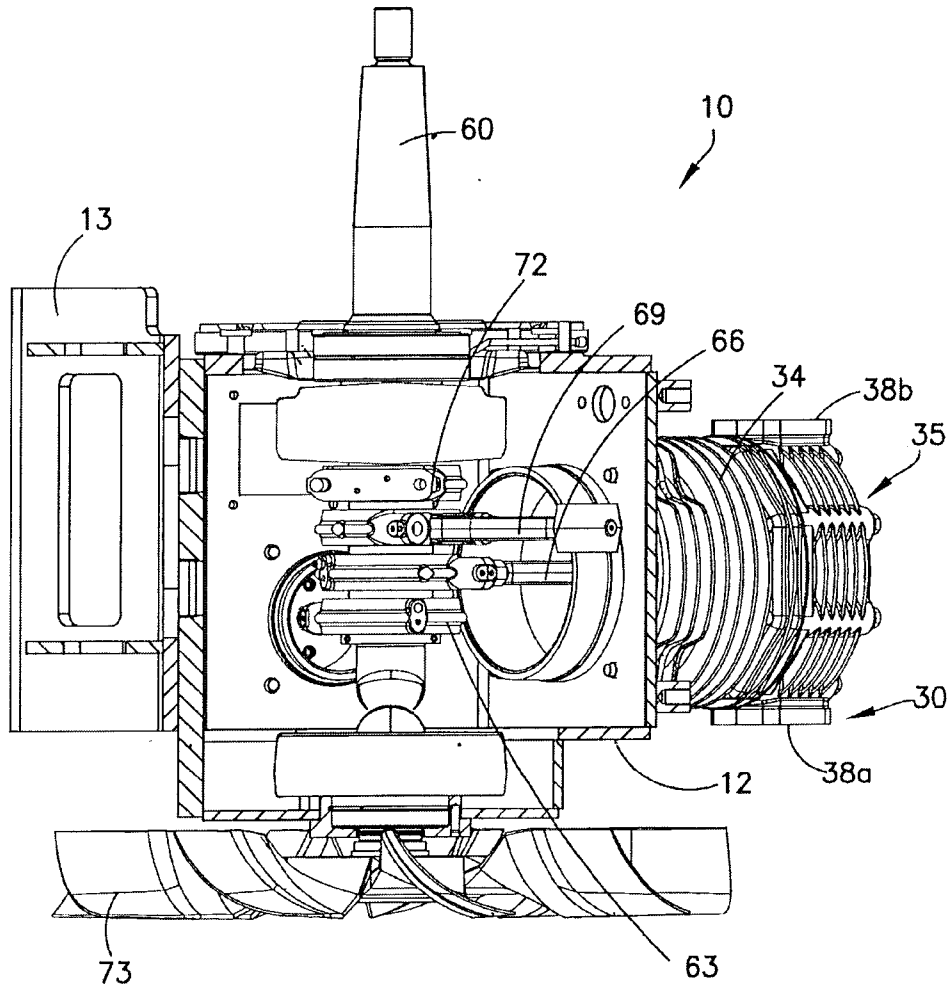

FIG.11

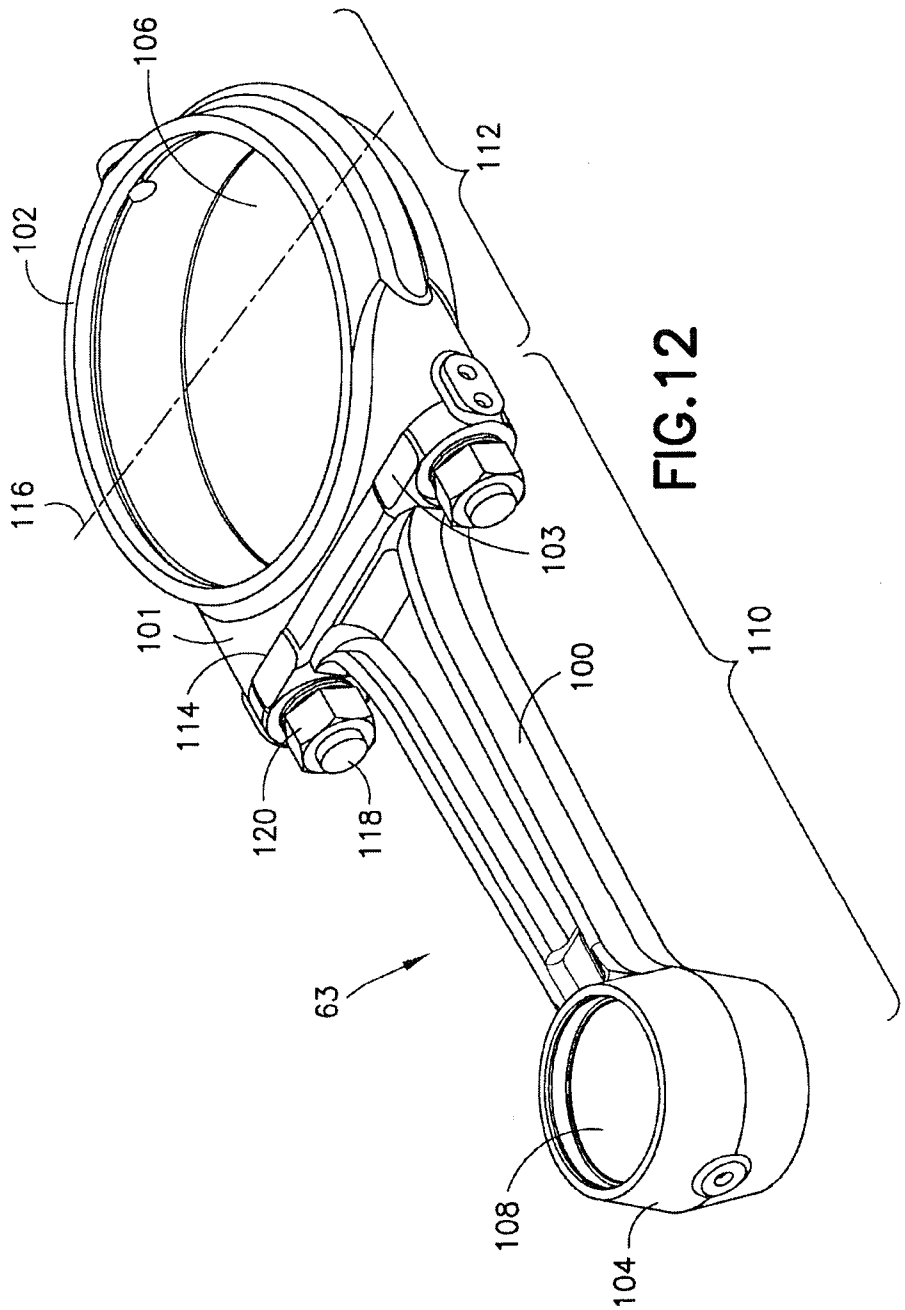

FIG.12

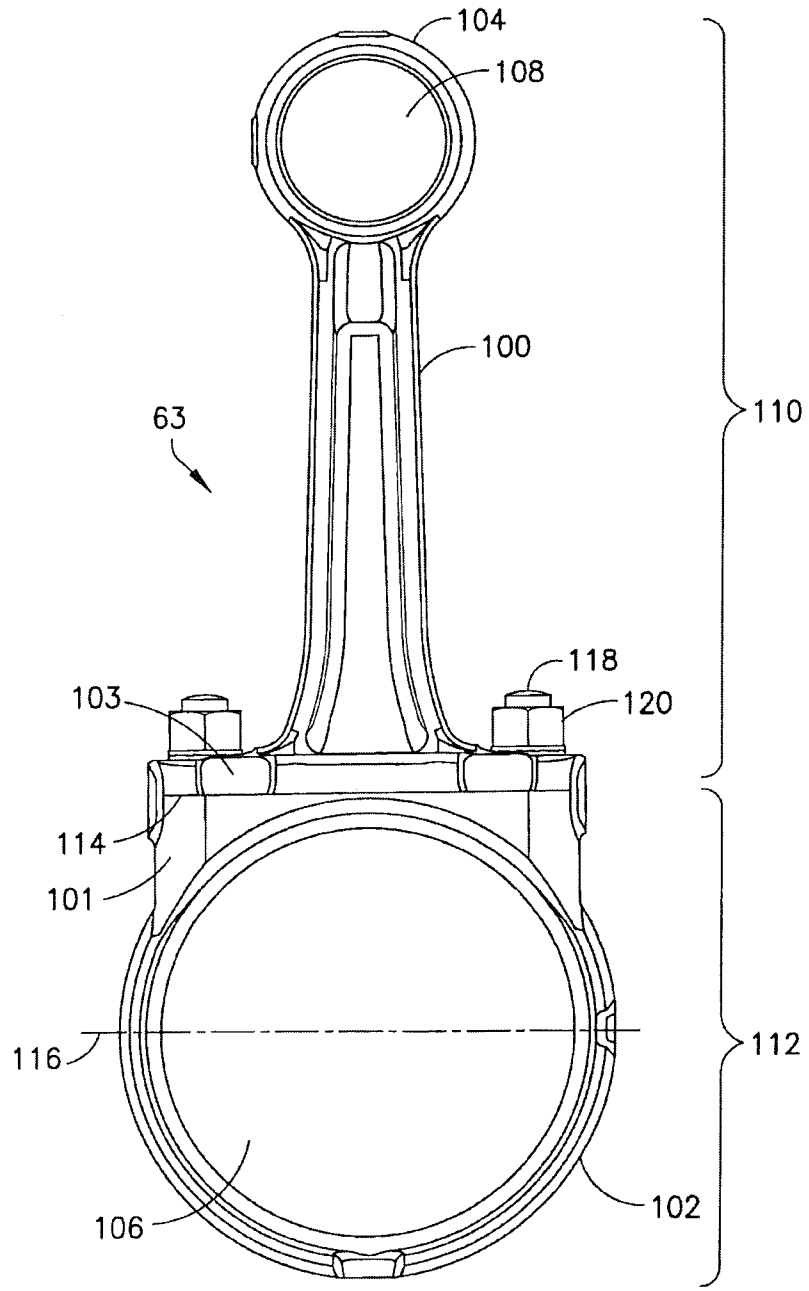

FIG.13

FIG.14

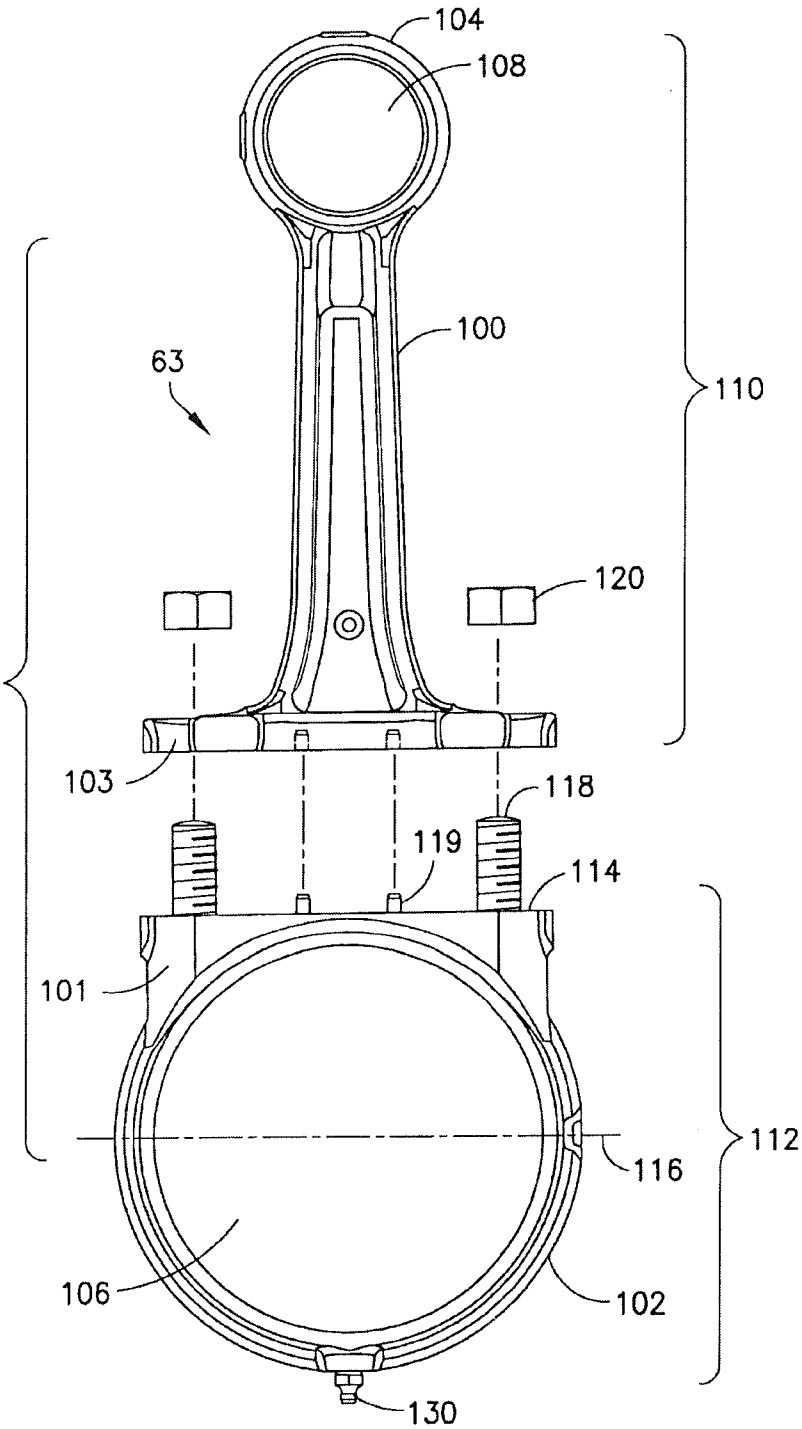

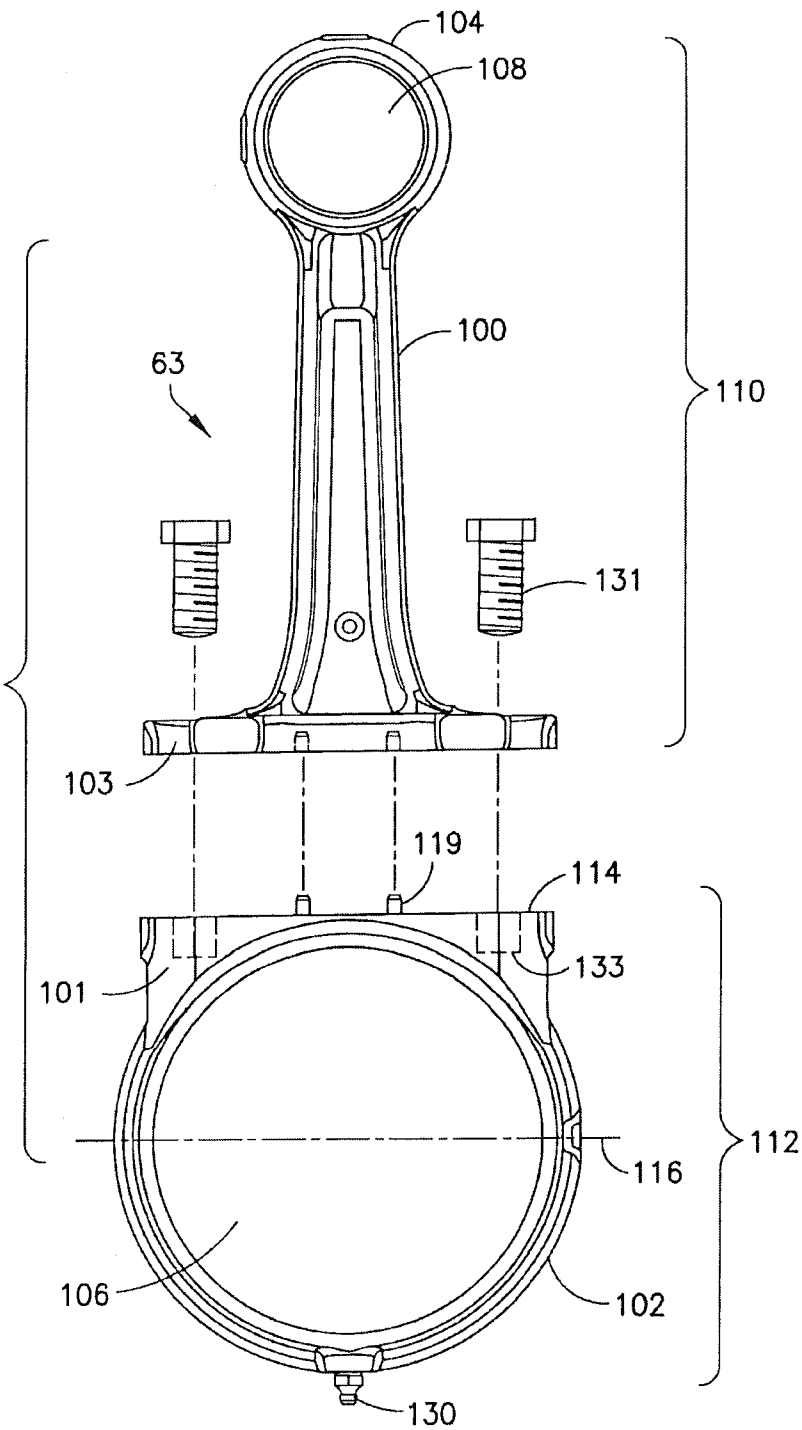

FIG.15

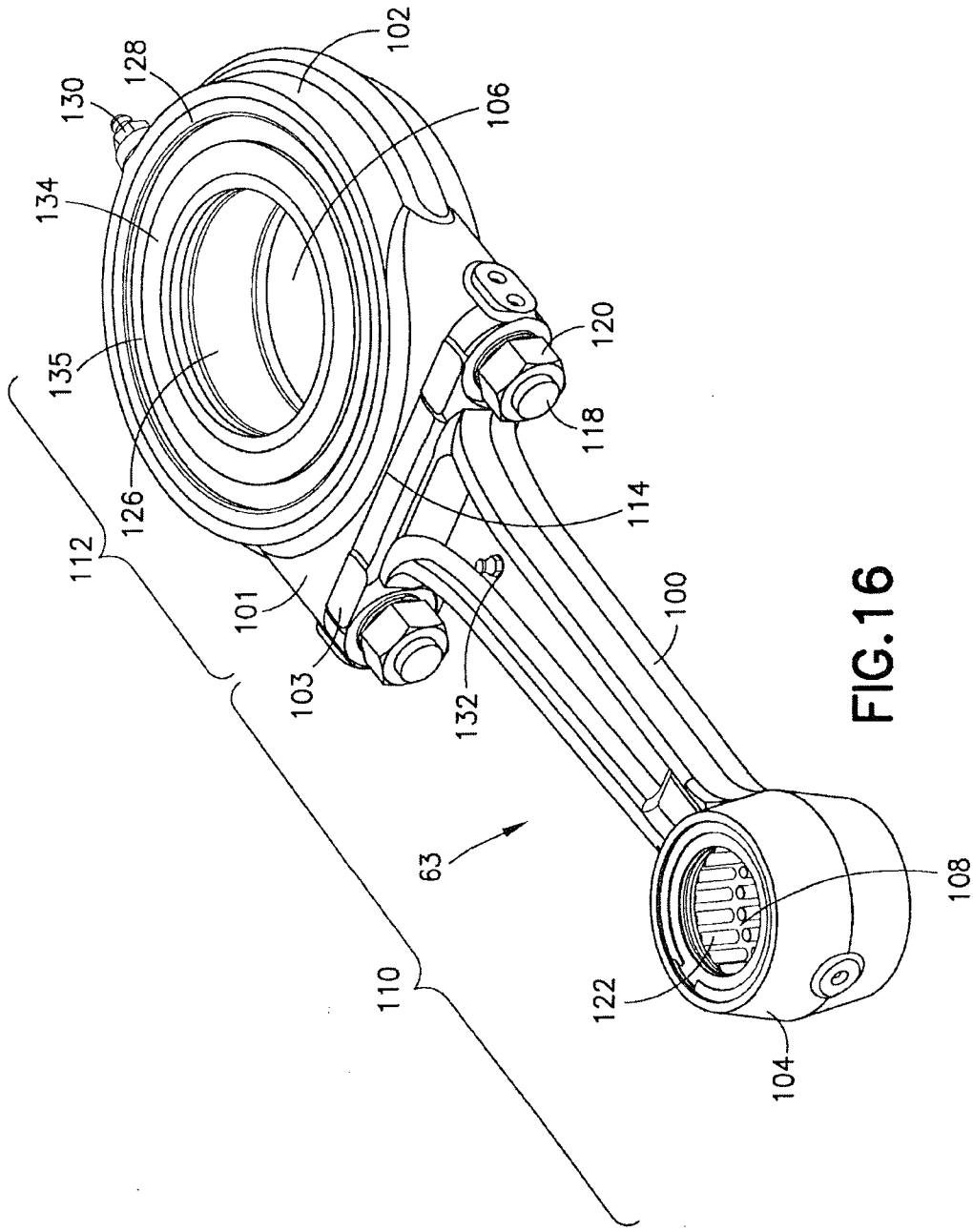
102
128
130
106
134
120
135
118
126
114
112
101
100
103
132
63
108
110
122
104

FIG.16

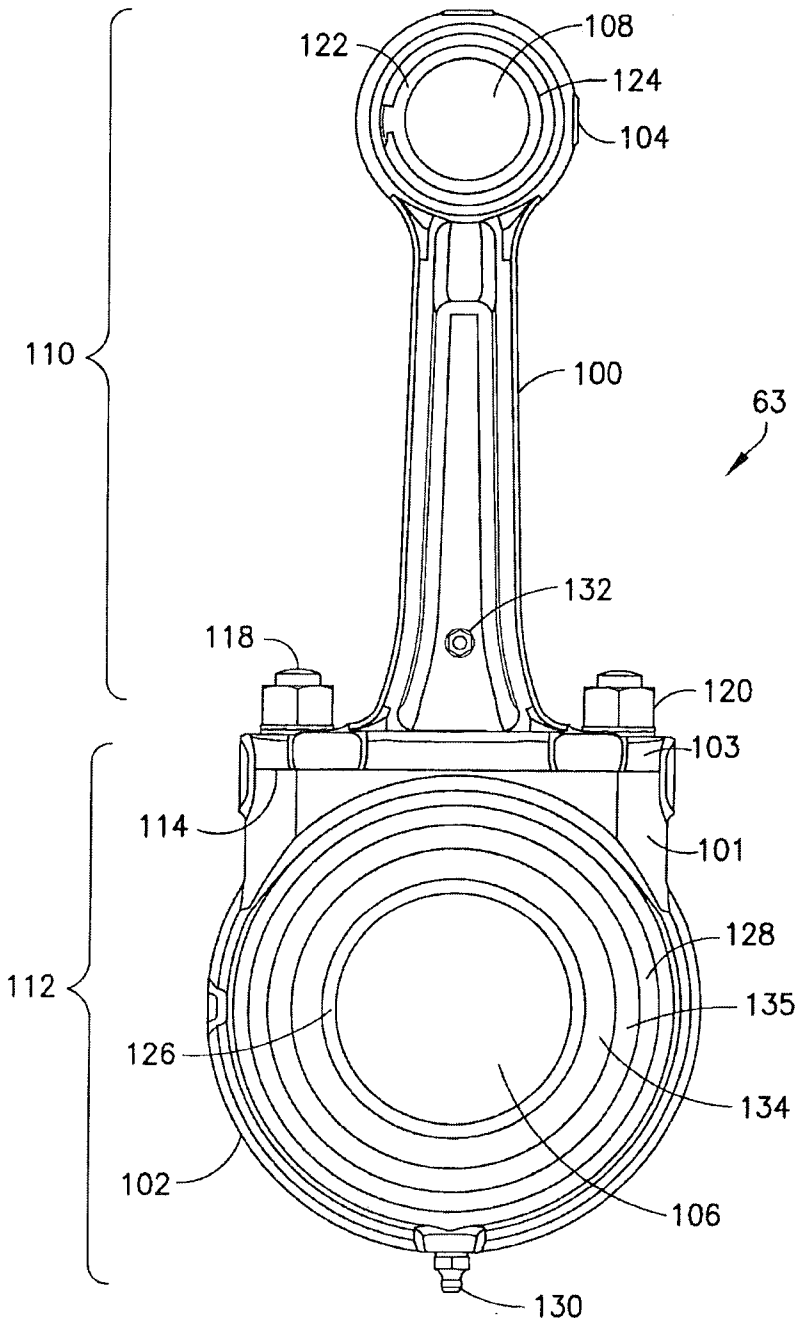
122
108
124
104
110
100
63
132
118
120
103
114
101
128
112
135
126
134
102
106
130

FIG.17

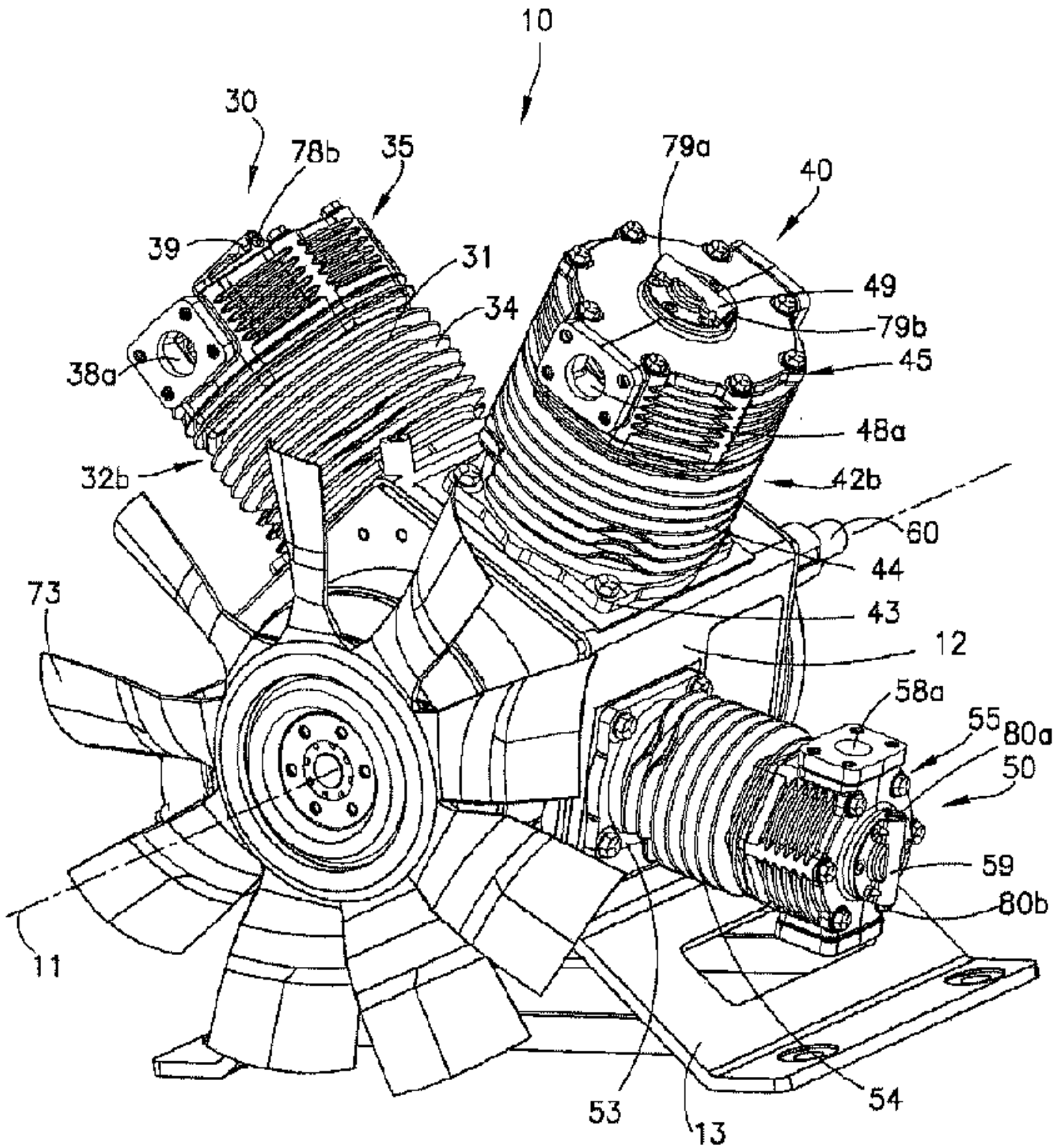
10
30
78b
35
79a
40
39
31
49
34
79b
38a
45
48a
32b
42b
60
44
73
43
12
58a
55
80a
50
59
80b
11
53
13
54