Aug. 14, 1945. P. N. CONDIT 2,382,385

ABSORBENT HOLDER

Filed May 29, 1943

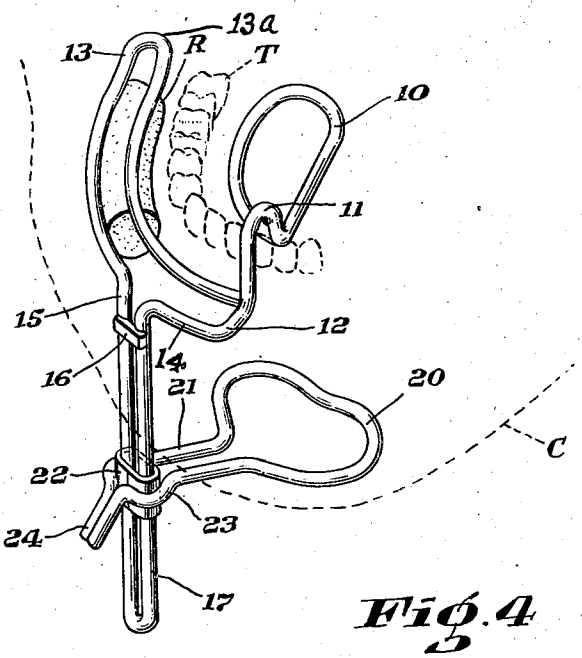

Fig. 1

Fig. 2

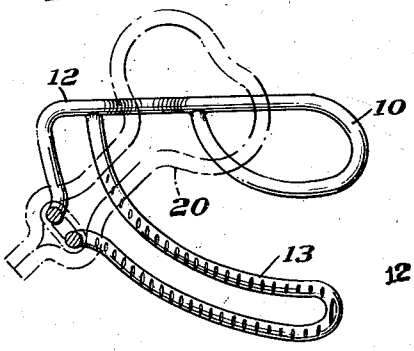

Fig. 4

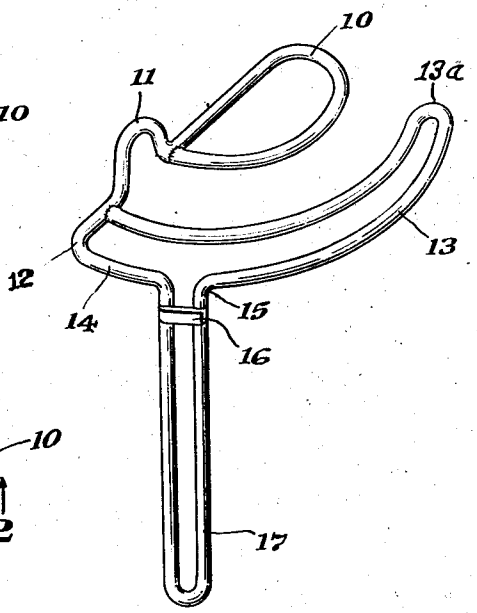

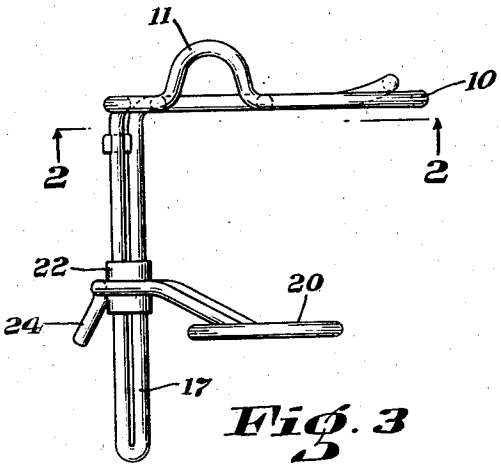

Fig. 3

INVENTOR.
Park N. Condit
BY Harold E. Cole
ATTORNEY

Patented Aug. 14, 1945 2,382,385

UNITED STATES PATENT OFFICE

2,382,385

ABSORBENT HOLDER

Park N. Condit, Newton, Mass.

Application May 29, 1943, Serial No. 488,989

3 Claims. (Cl. 128—346)

This invention relates to an absorbent holder which is used by dentists to hold cotton rolls in a predetermined position in the mouth.

One object of my invention is to provide a holder which is more effective than other holders in holding the absorbent cotton roll in place in the patient's mouth, and is also more comfortable. Another object is to provide an adjusting means that makes the affixing of the holder to the chin of the patient a simple operation.

A further object is to so construct said holder that it consists of one inseparable piece, adapted to receive an adjustable attaching member, and which can be manufactured at a relatively low cost. Still another object is to so construct an attaching member for said holder that it is adjustable thereon within a large range that makes it adaptable for attachment to a small chin of a child or a large chin of a man.

The foregoing and other objects which will appear as the nature of the invention is better understood, may be accomplished by a construction such as is disclosed by the drawing and specifications. The nature of the invention is such as to render it susceptible to various changes and modifications, and, therefore, I am not to be limited to said disclosure; but am entitled to all such changes therefrom as fall within the scope of my claims.

In the drawing:

Figure 1 is a perspective view of my holder for the left jaw in position in the mouth showing it holding an absorbent roll down in place, and with an attaching member bearing against the chin of the patient.

Figure 2 is a sectional view taken on the line 2—2 of Figure 3 showing the under surface of the jaw portion and the serrations made therein, the attaching member being shown in broken lines.

Figure 3 is a side elevational view of my holder for the right jaw of a patient with the attaching member mounted therein.

Figure 4 is a perspective view of my holder for the left jaw.

As illustrated, my holder has a tongue portion 10 in the form of a wide loop connected to a riser or bridge portion 11 that extends over the teeth of the patient when my holder is in position and then continues to form a closed end portion 12 from which a laterally extending lip portion 14 runs to and connects with one of the two wires that form the upper portion 15 of the chin member. A jaw member 13 in the form of a loop consists of a piece of wire extending from the opposite side of said chin member upper portion 15 and returns to join said closed end 12 where it meets said bridge 11. It turns upwardly at its free end extremity as at 13*a*. A bar 16 extends across and is welded to the outside surface of the two pieces forming said chin member and divides the latter off into said upper chin portion 15 and a lower chin portion 17, the latter terminating at its lower extremity in a closed end. Said bar 16 also serves as a stop to limit upward movement of the attaching member later described.

The under surface of said jaw member 13 is serrated, as shown in Figure 2 of the drawing, which effectively holds the cotton roll R in the predetermined position in the mouth next to the teeth T, as illustrated in Figure 1 of the drawing.

To keep my holder in position I provide an attaching member which has an outside loop portion 20, from which an arm 21 extends upwardly and flares outwardly to form a collar 23 which surrounds a tubular member 22 in which said chin member lower portion 17 makes a force-slide fit. An end or push portion 24 extends downwardly from said collar 23 and provides means, when pressure against it is applied, to force said attaching member to slide upwardly.

When my holder is inserted in place in the mouth said attaching member extends under the chin of the patient, and it is slid up on said chin lower portion 17 until it bears snugly against the under surface of the chin.

What I claim is:

1. An absorbent holder in combination with an attaching member, comprising a tongue portion, a lip portion, a bridge portion extending between and connecting said tongue and lip portions, a jaw portion connected to said lip portion, a chin portion extending downwardly from a point intermediate said lip and jaw portions when in position of use, said lip portion extending in a direction away from said jaw portion and laterally of said chin portion and then connecting with said bridge portion, and an attaching member cooperable with said chin member to attach said holder to a patient.

2. An absorbent holder in connection with an attaching member, comprising a looped tongue portion having a straight side and a curved side opposite thereto and spaced therefrom, a looped lip portion, a bridge portion which connects said tongue and lip portion, a looped jaw portion connected to said lop portion, a looped chin portion extending downwardly from said lip and jaw portions when in position of use, said lip portion extending laterally at an angle exceeding 45 degrees to said chin portion and in an opposite di-

rection to said jaw portion, and an attaching member cooperable with said chin member to attach said holder to patient.

3. An absorbent holder in combination with an attaching member, comprising a tongue portion, a lip portion, a bridge portion between and connecting said tongue and lip portions and extending in a direction towards said tongue portion crosswise of the general direction taken by said lip portion, a jaw portion connected to said lip portion, a chin portion extending downwardly from a point intermediate the lateral extremities of said lip and jaw portions when in position of use, said lip portion extending laterally of and in a direction substantially perpendicular to that of said chin portion and then connecting at its outside extremity with said bridge portion, and an attaching member cooperable with said chin member to attach said holder to a patient.

PARK N. CONDIT.