(Model.) 3 Sheets—Sheet 1.

J. MATTHEWS.

CARBONATING APPARATUS.

No. 246,968. Patented Sept. 13, 1881.

Fig: 1

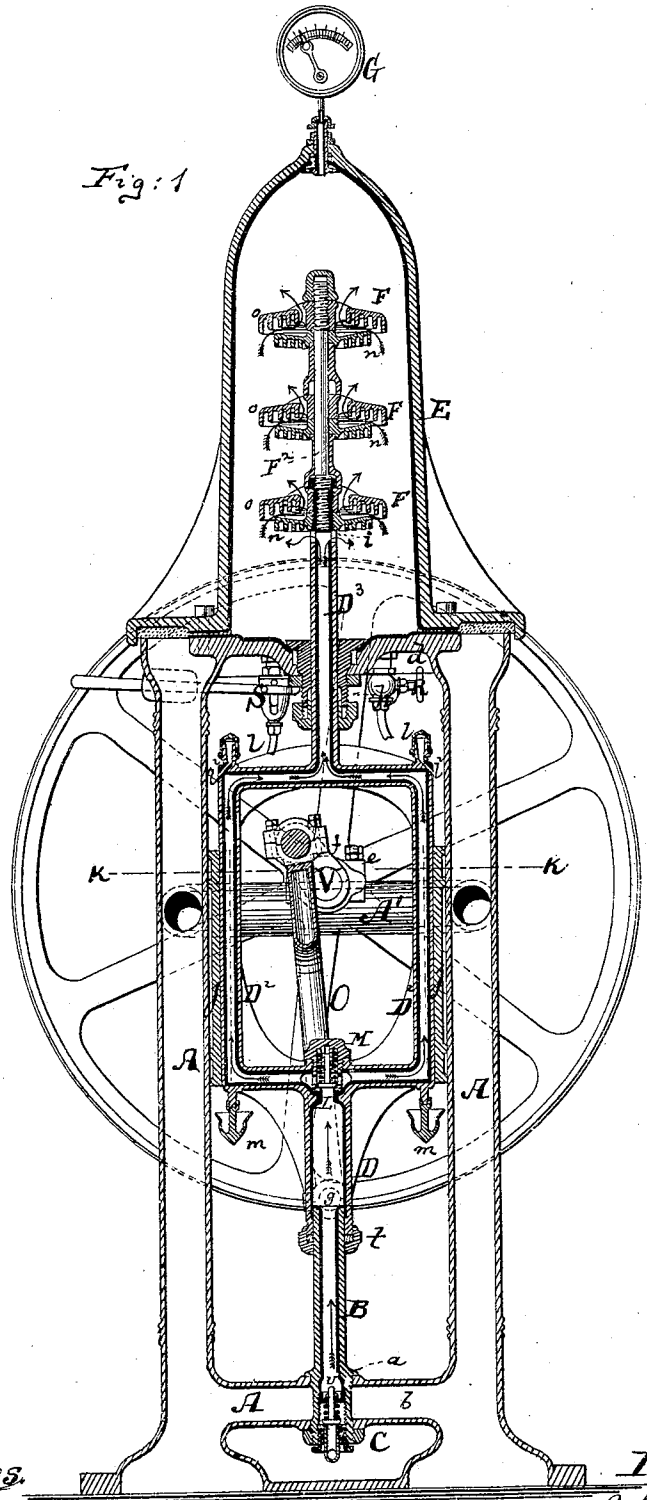

Witnesses.
John C. Tenbridge
Henry F. Parker

Inventor:
John Matthews
by his Attorneys
Briesen & Bell

N. PETERS. Photo-Lithographer, Washington, D. C.

(Model.)

3 Sheets—Sheet 2

J. MATTHEWS.

CARBONATING APPARATUS.

No. 246,968. Patented Sept. 13, 1881.

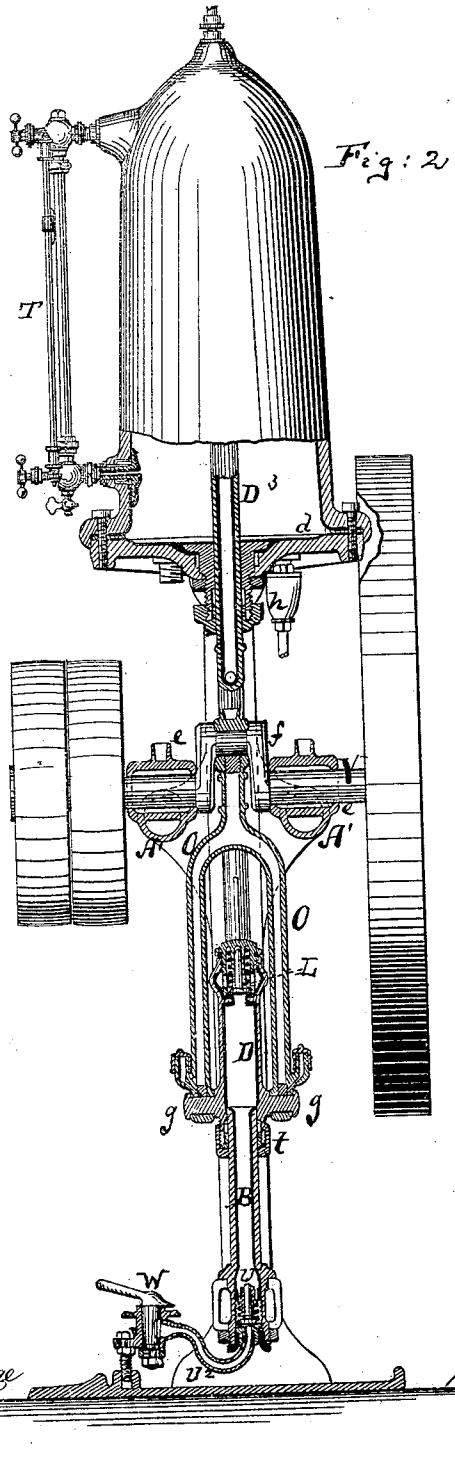

Witnesses.
John C. Trunbridge
Henry H. Parker

Inventor:
John Matthews
by his attorneys
Briesen & Betts

N. PETERS, Photo-Lithographer, Washington, D. C.

(Model.) 3 Sheets—Sheet 3.

J. MATTHEWS.

CARBONATING APPARATUS.

No. 246,968. Patented Sept. 13, 1881.

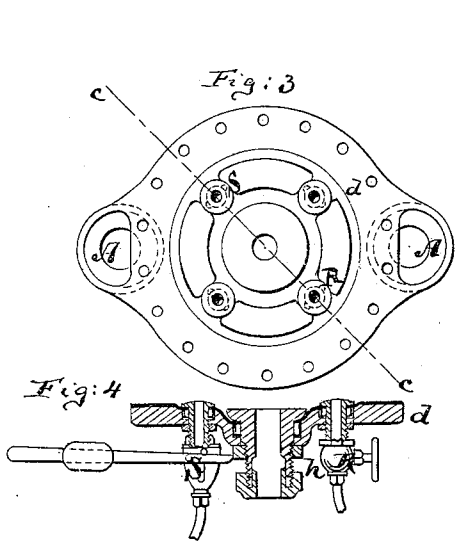

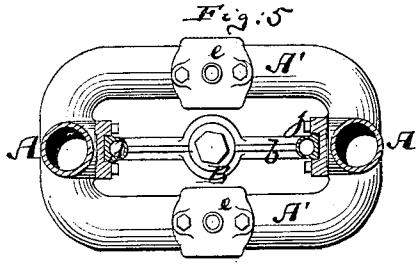

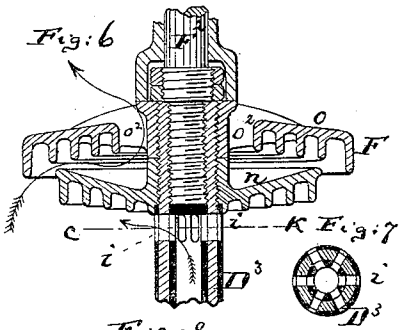

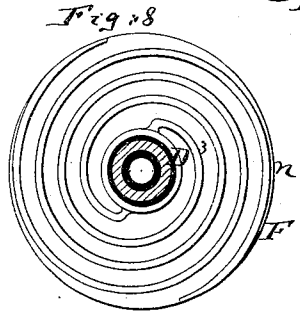

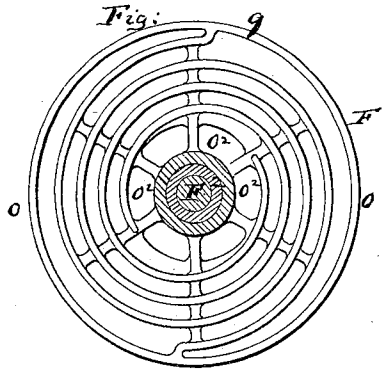

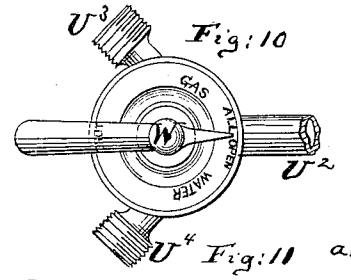

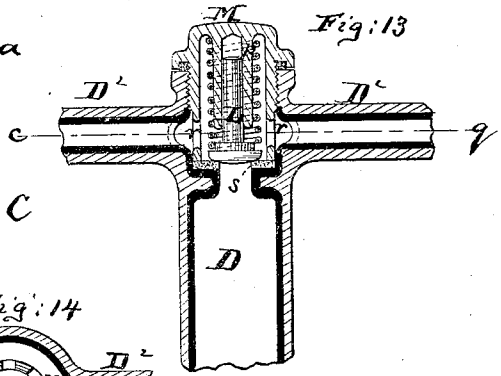

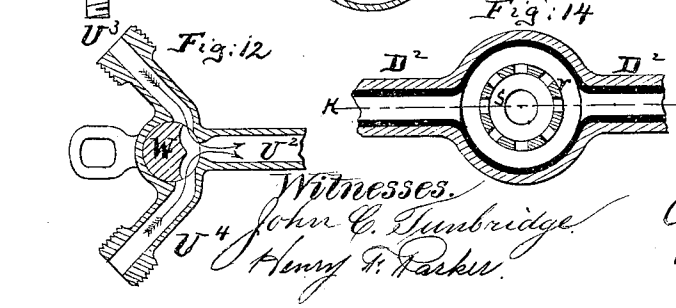

Witnesses.
John C. Tumbridge
Henry H. Parker

Inventor.
John C. Matthews
by his attorneys
Briesen & Bell

N. PETERS, Photo-Lithographer, Washington, D. C.

UNITED STATES PATENT OFFICE.

JOHN MATTHEWS, OF NEW YORK, N. Y.

CARBONATING APPARATUS.

SPECIFICATION forming part of Letters Patent No. 246,968, dated September 13, 1881.

Application filed June 16, 1881. (Model.)

To all whom it may concern:

Be it known that I, JOHN MATTHEWS, of New York, in the county and State of New York, have invented an Improved Carbonating Apparatus, of which the following is a specification.

Figure 1 is a vertical cross-section of my improved carbonating apparatus. Fig. 2 is a side view, partly in section, of the same. Fig. 3 is a detail top view of the supporting-frame and of the bottom plate of the receiver or condenser. Fig. 4 is a vertical central section of said bottom plate, taken on the plane of the line *c c*, Fig. 3. Fig. 5 is a horizontal section of the supporting frame-work, taken on the plane of the line *k k*, Fig. 1. Fig. 6 is a detail vertical section of the agitator contained within the receiver or condenser. Fig. 7 is a detail horizontal section through the upper end of the tube that supports the agitator, the line *c k*, Fig. 6, indicating the plane of section. Fig. 8 is a bottom view of the lower agitator-disk, and Fig. 9 a bottom view of the upper agitator-disk. Fig. 10 is a detail plan view of the twin cock that supplies the apparatus with gas and water. Fig. 11 is a vertical section of said twin cock and of the lower part of the stationary plunger that connects therewith. Fig. 12 is a horizontal section of said twin cock, taken on the plane of the line *q q*, Fig. 11. Fig. 13 is a vertical central section, on a larger scale than is shown in Fig. 1, of the upper part of the reciprocating cylinder and lower part of the reciprocating frame, showing the discharge-valve in position, the line *k q*, Fig. 14, indicating the plane of section. Fig. 14 is a horizontal section on the line *c q*, Fig. 13.

This invention relates to a new apparatus for carbonating beverages—that is to say, for charging a receiver or condenser under pressure with a mixture of gas and water, such mixture being used in the manufacture of aerated beverages of all kinds.

The invention consists, principally, in combining a hollow reciprocating frame with the receiver or condenser and with a stationary hollow plunger, so that by reciprocating said frame a pumping and also a compressing action will take place, the frame being balanced by the liquid that passes through it.

It also consists in combining with the reciprocating hollow frame above mentioned a reciprocating agitator within the condenser or receiver, for the purpose of thoroughly distributing the gas in the water and agitating the latter within the receiver.

The invention also consists in a new construction of the frame of the apparatus, which is hollow, and which in one continuous structure contains the bottom of the receiver, the supports of the operating-shaft, and the supports for the stationary plunger. All the parts exposed to the beverage in the apparatus are lined with block-tin, and the agitator-shaft is jacketed with pure silver, so as to prevent contamination of the liquid.

The invention also consists in the new arrangement of parts for lubricating the vertically-reciprocating frame, and in many details of improvement, which hereinafter are more fully pointed out.

In the accompanying drawings, the letter A represents the frame of the apparatus.

B is the stationary plunger, held in the lower part of the frame A in a vertical position. The jam-nut C, screwed upon the lower end of the stationary plunger B and bearing against the bottom of the frame A, as in Fig. 1, holds the stationary plunger in place, said stationary plunger having a flange, *a*, that rests on top of the cross-piece *b* of the frame A, against the bottom of which cross-piece the nut C presses.

The frame A is tubular throughout, of proper height and strength, and is, at its top, formed into a plate, *d*, which plate constitutes the bottom plate of the receiver or condenser E. At the proper height the upright tubes of the frame A are connected by horizontal tubes A′, (shown in Figs. 1 and 5,) and on these horizontal tubes A′ are the bearings *e* for the driving or operating shaft V, as indicated in Fig. 1. This shaft V has, in line with the posts of the frame, a crank, *f*, which crank connects by a forked rod, O, (clearly shown in Fig. 2,) with outwardly-projecting trunnions *g*, that are rigidly attached to the reciprocating vertical cylinder D. This reciprocating cylinder embraces and fits, even in its most elevated position, the upper portion of the stationary plunger B, as is clearly indicated in Figs. 1 and 2, so that when the shaft V is revolved by suitable machinery the cylinder D will be reciprocated up

and down, sliding, in so doing, along the stationary plunger B. This stationary plunger B is hollow, and has at its lower portion the suction-valve U, which is more clearly shown in Fig. 11—that is to say, a valve which is held down upon its seat by a suitable spring or weight.

From under the valve-seat of the suction-valve U extends a pipe, U^2, to a cock, W. (See Figs. 11 and 12.) This cock is a two-way cock, and so arranged that it can throw the pipe U^2 into connection with two branch tubes, U^3 and U^4. One of these tubes—say the tube U^3—connects with the gas-reservoir, and the other, U^4, with the water-reservoir.

The cock W can be turned by its handle (see Figs. 10 and 11) so as to establish communication between pipes U^3 and U^2, and also between pipes U^4 and U^2, as in Fig. 12, or between one of said branches and the pipe U^2 only, or more with one of said branches than with the other, as may be desired, so that the attendant will always be able to gage, by setting the cock W, the requisite proportionate supply of gas and water to the stationary plunger.

The vertically-reciprocating cylinder D is hollow throughout its length, and connects at its upper end with a quadrangular hollow frame, D^2, which in turn, at its upper end carries the vertical pipe D^3, that passes upward through the center of the plate *d*, a suitable stuffing-box for the tight fitting of the pipe D^3 in the aperture of the plate *d* being provided, as shown at *h*. At the junction of the cylinder D with the lower horizontal arms of the tubular frame D^2, is placed the discharge-valve L, (more clearly shown in Fig. 13,) which valve also is seated in a downward direction by the action of a suitable spring or weight. The upper end of the pipe D^3 is perforated within the receiver or condenser E, as shown at *i* in Fig. 1, and still more clearly in Figs. 6 and 7.

It will be readily understood that, a proper supply of water and of gas being opened to the hollow stationary plunger B and the shaft V being revolved, the cylinder D will act as a pump in connection with the valves U and L and with the stationary plunger B, for in ascending the cylinder D will suck the valve U open, leaving the valve L closed, and draw water and gas upward into the plunger B and cylinder D, and in descending the cylinder D will cause the valve U to be closed and the valve L to be opened, and the contents of the cylinder D to enter the hollow arms of the frame D^2. As the cylinder D now again ascends, the valve L will immediately close and prevent the return flow of anything that is already in the frame D^2 or above it, and a new supply will then be sucked into the cylinder D, and, on redescending, transferred to the frame D^2, &c., thus causing the vessel E to be charged with a mixture of gas and water in the requisite proportions, which mixture, after the cylinder shall have been properly filled, will, by the continued reciprocating action of the cylinder D and its frame D^2 and pipe D^3, be condensed in the vessel E to the necessary degree, a suitable pressure-gage, G, being placed upon the receiver or condenser E, to indicate when the desired degree of compression has been reached. A suitable safety-valve, S, is also placed either into the bottom of the vessel E or into any other portion thereof. Finally, the contents of the vessel E may be withdrawn through a pipe, R. T is a glass water-gage attached to the vessel E, to indicate the height of water therein.

For a proper guidance of the vertically-reciprocating tubular frame D^2 in the frame A, I provide the posts of the frame A on their inner sides with guide-rails *j*, (see Fig. 5,) which are preferably grooved on their contact-faces with the frame D^2, so as to prevent lateral displacement of said frame during its up-and-down motion. The frame D^2 is, at its upper corners, provided with suitable oil-cups, *l*, which discharge through inclined passages l^2 along the outer edge of the frame D^2, so as to lubricate the contact-surfaces of the frame D^2, and rails *j*. Superfluous lubricating material is caught in drip-cups *m*, that are suspended from the lower corners of the frame D^2.

The tube D^3 carries within the vessel E the agitator or agitators F, three such agitators being indicated in Fig. 1; but a greater or less number of them may be used. These agitators F are attached to a shaft, F^2, which is secured to the upper end of the pipe D^3, as shown in Fig. 1, and more clearly illustrated in Fig. 6. Each agitator F is composed of two parts, to wit, a lower plate, *n*, and an upper plate, *o*. The lower plate, *n*, which, by preference, is cup-shaped, as in Fig. 6, reaches to the shaft F^2 or its jacketing, and is of less diameter than the upper plate, *o*. The upper plate, *o*, is annular, its inner circumference being larger than the outer circumference of shaft F^2 or its jacketing, thus leaving an open space, o^2, between the plate *o* and the shaft, suitable braces being, of course, provided for maintaining the annular plate *o* on the shaft. The lower faces of the two plates *n* and *o* are provided each with one or more spiral ribs or volutes, which, as the agitator descends during the reciprocating action of the carrying-pipe D^3, cause a churning action of the water, and catch and distribute the gas in the water which they agitate, thus causing the necessary intimate commingling of gas and water within the receiver E.

This apparatus works continuously, and supplies gas and water to the receiver in the proper proportions, and condenses the mixture in the receiver. More perfect results will be obtained from it than by any previously-known apparatus.

All the parts in the machine that are exposed to the beverage are lined with block-tin, which is indicated in the drawings by the heavy black lines on the inner faces of the

pipes B, D, D^2, and D^3 and vessel E. The agitator-shaft F^2 is jacketed, by preference, with pure silver.

The valve L can be easily reached by unscrewing the cap M, that is placed over it, as shown in Fig. 13, said cap carrying also a guide-tube, *p*, in which the stem of the valve L is received; and moreover the cap M has, outside of the pipe *p*, a downwardly-extending tube, *r*, that reaches and holds the seat *s* for the valve L, the tube *r* being perforated, as shown in Figs. 13 and 14, to permit the proper passage of liquid through it. The lower end of the cylinder D carries a suitable stuffing-box, *t*, which is in contact with the stationary plunger B, and prevents escape of liquid or gas between the parts B and D. The frame D^2, being tubular throughout, is always evenly balanced by its liquid contents. Being united to the forked rod O, the balance is made the more complete, and all lateral strain or tendency to tilt is avoided.

Nothing herein contained is intended to claim anything shown in Letters Patent granted to me September 3, 1867, No. 68,375.

I claim—

1. In a carbonating apparatus, the receiver or condenser E, combined with the feed or discharge pipe D^3, which is connected by and combined with the hollow frame D^2 and supply-pump, and which enters the bottom of the condenser E, all arranged substantially as described.

2. In a carbonating apparatus, the tubular frame A, made with tubular cross-piece *b* and with horizontal tubular braces A', and with top plate, *d*, all arranged for properly supporting the stationary plunger, the operating crank-shaft, and the condenser or receiver, substantially as described.

3. In a carbonating apparatus, the combination of the branch pipes U^3 and U^4 with the two-way cock W, pipe U^2, stationary plunger B, containing suction-valve U, and with the reciprocating-cylinder D and delivery-valve L, all arranged substantially as herein described.

4. The combination of the reciprocating pump-cylinder D with the hollow reciprocating frame D^2 and delivery-pipe D^3, substantially as specified.

5. The combination of the reciprocating pump-cylinder D with the hollow reciprocating frame D^2 that carries the delivery-pipe D^3, and with the guide-rails *j* and stationary frame A, for operation substantially as specified.

6. The reciprocating hollow frame D^2, carrying the oil-cups *l* at its upper corners and the drip-cups *m* at its lower corners, in combination with the stationary frame A and guide-rails *j*, substantially as specified.

7. The delivery-valve L, in combination with the screw-cap M, having tubular extensions *p r*, and with the seat *s*, substantially as herein shown and described.

8. The frame D^2, made hollow and combined with the downwardly-projecting cylinder D and with the upwardly-projecting pipe D^3, and with the operating crank-shaft V, and forked rod O, all arranged so that said frame D^2 constitutes a support for the reciprocating pump-cylinder and for the reciprocating delivery-pipe, and forms a balanced passage from the pump-cylinder to the delivery-pipe, substantially as specified.

JOHN MATTHEWS.

Witnesses:
THOMAS DYSON,
FRED. MATTHEWS.