PCT WORLD INTELLECTUAL PROPERTY ORGANIZATION
International Bureau

INTERNATIONAL APPLICATION PUBLISHED UNDER THE PATENT COOPERATION TREATY (PCT)

(51) International Patent Classification 5 : H01J 61/38, 65/04

A1

(11) International Publication Number: WO 93/21655

(43) International Publication Date: 28 October 1993 (28.10.93)

(21) International Application Number: PCT/US93/03417

(22) International Filing Date: 13 April 1993 (13.04.93)

(30) Priority data:

867,551	13 April 1992 (13.04.92)	US
875,769	29 April 1992 (29.04.92)	US
882,409	13 May 1992 (13.05.92)	US
971,167	4 November 1992 (04.11.92)	US

(60) Parent Applications or Grants
(63) Related by Continuation

US	604,487 (CIP)
Filed on	25 October 1990 (25.10.90)
US	779,718 (CIP)
Filed on	23 October 1991 (23.10.91)
US	867,551 (CIP)
Filed on	13 April 1992 (13.04.92)
US	875,769 (CIP)
Filed on	29 April 1992 (29.04.92)
US	882,409 (CIP)
Filed on	13 May 1992 (13.05.92)
US	882,410 (CIP)
Filed on	13 May 1992 (13.05.92)
US	971,167 (CIP)
Filed on	4 November 1992 (04.11.92)

(71) Applicant *(for all designated States except US):* FUSION SYSTEMS CORPORATION [US/US]; 7600 Standish Place, Rockville, MD 20855 (US).

(72) Inventors; and
(75) Inventors/Applicants *(for US only) :* DOLAN, James, T. [US/US]; 536 Ellrose Ct., Frederick, MD 21702 (US). URY, Michael, G. [US/US]; 6518 E. Halbert Road, Bethesda, MD 20817 (US). WOOD, Charles, H. [US/US]; 14725 Janice Drive, Rockville, MD 20853 (US). TURNER, Brian [US/US]; 9087 Dawn Court, Myersville, MD 21773 (US). WAYMOUTH, John, F. [US/US]; 16 Bennett Road, Marblehead, MA 01945 (US).

(74) Agents: ABRAMSON, Martin et al.; Pollock, Vande Sande & Priddy, 1990 M Street, N.W., Suite 800, Washington, DC 20036 (US).

(81) Designated States: AT, AU, BB, BG, BR, CA, CH, CZ, DE, DK, ES, FI, GB, HU, JP, KP, KR, LK, LU, MG, MN, MW, NL, NO, NZ, PL, PT, RO, RU, SD, SE, SK, UA, US, European patent (AT, BE, CH, DE, DK, ES, FR, GB, GR, IE, IT, LU, MC, NL, PT, SE), OAPI patent (BF, BJ, CF, CG, CI, CM, GA, GN, ML, MR, NE, SN, TD, TG).

Published
With international search report.

(54) Title: LAMP HAVING CONTROLLABLE CHARACTERISTICS

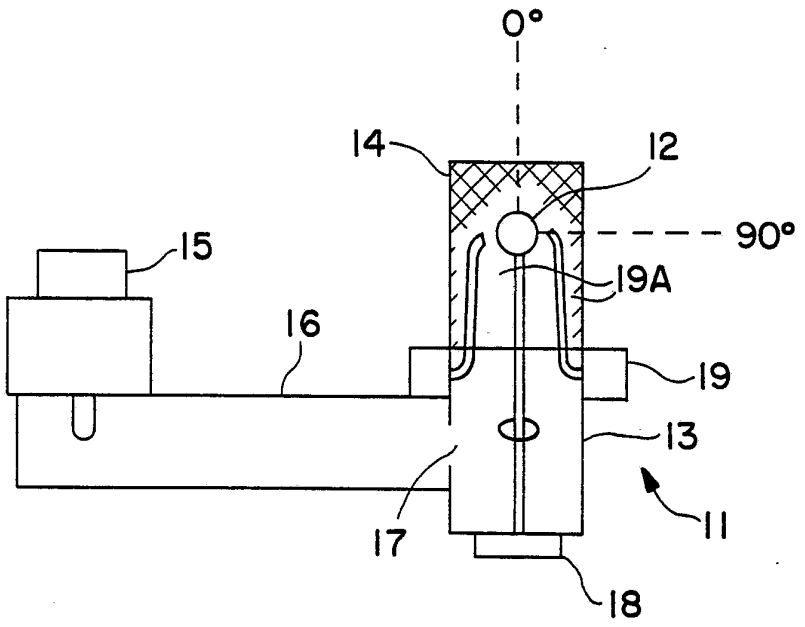

(57) Abstract

The spectral energy characteristic of a discharge lamp is controlled by changing the density of the fill substance. The spectral characteristic can be shifted while substantially maintaining its shape by changing the density of the fill. A sulfur or selenium containing discharge lamp which is operated at a pressure of at least about 1 atmosphere contains a low ionization potential substance in the fill. Characteristics which are improved are one or more of spatial color uniformity, extinguishing characteristics, and bulb starting reliability. Particular substances which are added to the fill are alkali metal containing substances, III B metal containing substances, and alkaline earth metal containing substances. When light is reflected back into the bulb, the light which is re-emitted is stronger in the higher wavelengths.

FOR THE PURPOSES OF INFORMATION ONLY

Codes used to identify States party to the PCT on the front pages of pamphlets publishing international applications under the PCT.

AT	Austria	FR	France	MR	Mauritania
AU	Australia	GA	Gabon	MW	Malawi
BB	Barbados	GB	United Kingdom	NL	Netherlands
BE	Belgium	GN	Guinea	NO	Norway
BF	Burkina Faso	GR	Greece	NZ	New Zealand
BG	Bulgaria	HU	Hungary	PL	Poland
BJ	Benin	IE	Ireland	PT	Portugal
BR	Brazil	IT	Italy	RO	Romania
CA	Canada	JP	Japan	RU	Russian Federation
CF	Central African Republic	KP	Democratic People's Republic of Korea	SD	Sudan
CG	Congo			SE	Sweden
CH	Switzerland	KR	Republic of Korea	SK	Slovak Republic
CI	Côte d'Ivoire	KZ	Kazakhstan	SN	Senegal
CM	Cameroon	LI	Liechtenstein	SU	Soviet Union
CS	Czechoslovakia	LK	Sri Lanka	TD	Chad
CZ	Czech Republic	LU	Luxembourg	TG	Togo
DE	Germany	MC	Monaco	UA	Ukraine
DK	Denmark	MG	Madagascar	US	United States of America
ES	Spain	ML	Mali	VN	Viet Nam
FI	Finland	MN	Mongolia		

LAMP HAVING CONTROLLABLE CHARACTERISTICS

The present application is a continuation-in-part of U.S. Application No. 779,718, filed October 23, 1991, which is a continuation-in-part of U.S. Application No. 604,407, filed October 25, 1990.

One aspect of the present invention relates to an improved visible lamp, and particularly to such a lamp which has a controllable spectral output.

As is well known, the color of the light which is provided by a lamp is determined by the spectral energy distribution of the emitted radiation. In general, visible light sources emit over the spectral range of 350-750 nanometers.

It is desirable to be able to control the "tint" of a lamp which nominally emits over the entire visible spectrum. For example, for certain applications it may be desirable for the light to be tinted red, while for certain other applications, a green tint may be preferred. In addition to being able to provide different lamps having different tints, it is also desirable to be able to vary the tint or spectral emphasis of the light which is emitted by a particular lamp during operation.

In the prior art, discharge lamps are typically provided with different spectral emphases by employing fill additives. For example, a metal halide lamp which is doped with thallium emphasizes the green part of the spectrum, whereas one which is doped with sodium would emphasize the yellow. One disadvantage of such lamps is that a different additive or combination of additives must be used to make each differently tinted lamp, thus introducing manufacturing complexities. Additionally, due to the fact that different fill substances have different aging characteristics, the spectra of lamps using additives are prone to change over time.

Another approach to modifying the color output of a lamp is to use external filters. However, such devices inevitably reduce the efficacy of the overall lamp system. It is also known that incandescent lamps can be made more red by reducing the operating temperature of the filament, but this also has the effect of reducing the lamp efficacy.

Additionally, the above schemes which are known to the prior art change the color emphasis of the light output by changing the shape of the overall spectral distribution, i.e., by emphasizing one portion of the spectrum but not others. However, it has been found that for certain applications, it is advantageous to change the color emphasis while retaining substantially the same shape for the overall spectral distribution. For example, in red/green/blue (RGB) color reproduction systems such as a liquid crystal display (LCD) high definition television, it is desirable to provide a lamp having a spectral energy distribution which can emphasize the blue or red without substantially distorting the shape of the overall distribution.

In co-pending U.S. Applications Nos. 779,718 and 604,487, which are incorporated herein by reference, a new type of discharge lamp is disclosed which uses a fill which contains a sulfur or selenium containing substance. The fill is present at a pressure of at least about 1 atmosphere, and is excited at a relatively high power density. The lamp produces a molecular spectrum in the visible part of the spectrum at a relatively high efficacy and has exhibited a long lifetime and a stable color output over time.

While the lamp disclosed in the prior applications has many advantageous properties, when not used in accordance with an aspect of the present invention, the spectral output or color temperature may vary around the periphery of the bulb. It is of course desirable for many applications, for the spectral output to be uniform around the bulb surface, so that all portions of the illuminating energy appear to be the same color.

It has also been found that the above-described spatial "color separation" effect may become more pronounced when the discharge lamp

is operated at low power levels. Furthermore, at such power levels the bulb may extinguish or the discharge may retreat from the bulb walls.

In accordance with a first aspect of the present invention, a discharge lamp is provided which has a fill substance which emits primarily throughout the visible part of the spectrum, and which has the property of having a visible spectral distribution which can be changed by controlling the density of the fill substance.

In accordance with a second aspect of the invention, a discharge lamp is provided which has a fill substance which emits primarily throughout the visible part of the spectrum, and which has the property of having a visible spectral characteristic which can be shifted in wavelength without substantially changing the shape of the characteristic by controlling the density of the fill substance.

In accordance with a third aspect of the present invention, discharge lamps which have a sulfur or selenium based fill are provided with different spectral emphases or tints by controlling the fill density of a sulfur or selenium containing fill substance.

In accordance with a fourth aspect of the invention, discharge lamps having visible spectral characteristics of substantially the same shape, but shifted in wavelength from each other, are provided by controlling the fill density of a sulfur or selenium containing fill substance.

In accordance with a fifth aspect of the invention, the spectral output of a discharge lamp having a sulfur or selenium containing fill is controlled in real time by controlling the fill density during operation. This may be accomplished by controlling the cooling which is applied to the lamp bulb to condense more or less of the fill substance out of the gaseous fill.

Additionally, in accordance with an aspect of the present invention, the bulb fill is constituted so as to obviate the above-described effects of spatially varying spectral output or color temperature. Thus, the lamp may be configured so that it emits with a uniform color temperature around the

bulb surface. Additionally, operation at lower power levels without extinguishing may be possible.

In accordance with a sixth aspect of the present invention, a substance is added to the bulb fill which improves the spatial uniformity of the color temperature of the light which is emitted by the bulb.

In accordance with a seventh aspect of the invention, a substance is added to the fill which improves the starting of the lamp.

In accordance with a eighth aspect of the invention, a substance is added to the fill which allows the lamp to be effectively operated at lower power levels.

In accordance with a ninth aspect of the invention, a substance is added to the fill which has a low ionization potential.

In accordance with a tenth aspect of the invention, a substance is added to the fill which is an alkalai metal containing substance.

In accordance with a eleventh aspect on the invention, a substance is added to the fill which is a III B metal containing substance.

In accordance with a twelfth aspect of the invention, a substance is added to the fill which is an alkaline earth metal or a rare earth element containing substance.

In accordance with a thirteenth aspect of the invention, mercury is added to the fill.

In accordance with a fourteenth aspect of the invention, an improved bulb is provided, which may be used in a discharge lamp.

It is known in the prior art to add the substance sodium, which is an alkalai metal, to discharge lamps to provide spectral emphasis, and to arc lamps in particular to rectify a problem known as "arc constriction" wherein the discharge between the electrodes becomes undesirably constricted in certain regions.

It has been discovered in accordance with the present invention that when a low ionization potential material is added to the fill of a high pressure

lamp containing sulfur or selenium, the spatial uniformity of the color temperature of the light emitted by the bulb and/or the starting characteristics of the lamp are improved.

It has further been discovered that when an alkalai metal containing substance is added to the fill of a high pressure lamp wherein the primary light emitting fill component is a sulfur or selenium containing substance, the following advantages are provided:

a) the color temperature of the emitted light around the surface of the bulb becomes spatially more uniform, and this is in general true even at lower power densities;

b) the lamp starts more reliably; and

c) the lamp may be operated at lower power levels without extinguishing.

Additionally, it has been discovered that when a III B metal containing substance is added to the lamp fill of a high pressure sulfur or selenium containing lamp, the spatial uniformity of the color temperature of the emitted light around the bulb is improved.

In accordance with a still further aspect of the present invention, it has been found that when the light which is emitted by a sulfur or selenium based discharge lamp is reflected back into the bulb, the resultant light which is re-emitted is stronger in the higher wavelengths, i.e., the red portion of the spectrum. Therefore, by using a reflector which is approximately spherical in shape, a lamp which is richer in red wavelengths may be provided. Additionally, by using a wavelength selective reflector, such as a dichroic reflector, a lamp having a spectral output which is more nearly equivalent to that of a black body may be provided. Also, by the use of such wavelength selective reflectors, lamps which are well suited to particular applications may be provided.

The invention will be better understood by referring to the accompanying drawings wherein:

Brief Description of the Figures

Figure 1 shows a microwave powered electrodeless lamp.

Figure 2 shows a spectral energy distribution with a peak at 515 nanometers.

Figure 3 shows a spectral energy distribution with a peak at 490 nanometers.

Figure 4 shows a graph of wavelength peak vs. fill density.

Figure 5 shows a system wherein the fill density is controlled by varying the cooling of the lamp.

Figure 6 shows a further embodiment of a high pressure sulfur or selenium containing lamp.

Figure 7 shows a further embodiment of a sulfur or selenium containing lamp.

Figure 8 shows a exemplary spectrum emitted by the lamp of Figure 6.

Figure 9 is a graph of correlated color temperature vs. angular position for a lamp such as is shown in Figure 6.

Figure 10 shows a further embodiment of a lamp which may incorporate the invention.

Figure 11 and 12 show further embodiments of sulfur or selenium based discharge lamps.

Figure 13 shows a lamp with a spherical reflector in a spectrum measuring setup.

Figure 14 shows the spectrum obtained with the arrangement of Figure 13 when the reflector is blackened.

Figure 15 shows the spectrum obtained with the arrangement of Figure 13 when the reflector is shiny.

Figure 16 is a graph depicting the power ratios of shiny/black reflectors by wavelength range.

Figure 17 is a 1931 chromaticity diagram depicting coordinates of an uncorrected and corrected lamps respectively.

Figure 18 shows a further embodiment of the invention.

Detailed Description of the Invention

Figure 1 shows a microwave powered electrodeless lamp into which the present invention may be incorporated. Referring to the figure, a pair of magnetrons 1, 1' generate microwave energy which propagates along waveguides 2, 2'. The waveguides lead to microwave cavity 5 which is comprised of solid conductive wall, cup-shaped part 4, and metal mesh cup-shaped part 6, which are joined at their respective ends 4A, 6A. Within the end of the waveguides 2,2', on the solid wall are located antenna slots 3,3' which serve to couple microwave energy from the waveguide into the cavity where it causes an oscillating field to occur.

A discharge bulb 7 including a supporting stem 7A is located within cavity 5. The supporting stem is connected through a hole (not shown) in solid cup shaped part 4, to the shaft of a motor 8. The motor rotates the bulb 7 to improve the cooling of the bulb.

As mentioned above, the fill in bulb includes a sulfur or selenium containing substance. It is further desirable to use an inert gas, such as argon or xenon, which aids in starting the discharge. The lamp of Figure 1 may be characterized as a high pressure lamp. Thus, the fill in bulb 7 is present in amounts such that the fill pressure is at least 1 atmosphere or above when excited to operating temperature, and is preferably 2 to 20 atmospheres. Furthermore, the fill pressure is mainly controlled by the primary radiating component, which typically has a substantially higher partial pressure than that of other constituents when the lamp is operational. The illumination provided by the lamp may be augmented in various regions of the spectrum by including certain additives in the fill.

As noted above, in addition to using sulfur and selenium in elemental form, compounds of these elements may be used. For example, InS,

As_2S_3, S_2Cl_2, CS_2, In_2S_3, SeS, SeO_2, $SeCl_4$, SeTe, P_2Se_5 and Se_3As_2, as well as other compounds of sulfur and selenium, may be used. The compounds which are used have a low vapor pressure at room temperature, i.e., they are in a solid or liquid state, and a high vapor pressure at operating temperature.

The term "a sulfur containing substance" as used herein, includes both elemental sulfur and sulfur compounds, while the same is true for the corresponding terms as applied to selenium. It should be appreciated that the primary radiating component of the fill may be comprised of a combination of a sulfur containing substance and a selenium containing substance, rather than only one of these substances. Additionally, the primary radiating component may be comprised of a mixture of the elemental form and a compound(s) of a particular substance or substances.

The fill is excited at power densities in excess of 50 watts/cc and preferably in excess of 100 watts/cc.

Referring to Figure 2, the spectral energy distribution of a lamp as shown in Figure 1 is shown. The spectral energy distribution covers the range from 350 to 750 nanometers, which is generally the visible range. The spectrum has its peak at about 515 nanometers, and the output appears to be white with a green tint. As is seen, the spectrum is continuous throughout the visible range. Analyses of the spectral energy distribution according to the 1931 CIE (Commission International de l'Eclairage) determines a correlated color temperature of 6000 degrees kelvin and x and y coordinates of .320 and .386 respectively on the chromaticity diagram. The bulb which provided the spectrum which is shown in Figure 2 was provided with a discharge fill consisting of 2.5 milligrams per cubic centimeter of sulfur, and 60 torr of argon.

Referring to Figure 3, the spectral energy distribution of a second lamp made and operated according to the invention is shown. This lamp was operated under the same conditions as the lamp represented in Figure 2, but

the lamp represented in Figure 3 was provided with sulfur of somewhat lesser density than the lamp represented in Figure 2, that is 1.3 milligrams per cubic centimeter. This bulb also had 60 torr of argon. The output appears white but in this case with a blue tint, and the peak of the spectral energy distribution occurs at about 490 nanometers. The correlated color temperature is 8500 degrees kelvin, while the x and y coordinates on the chromaticity diagram are .275 and .334 respectively.

It should be noted that both of the spectra shown in Figures 2 and 3 ascend from near zero smoothly from the 350 nanometer mark to their respective peaks, and descend more gradually to a low level at the 750 nanometer mark. Aside from the slight jitter, the curves are smooth. This is in contrast to the ubiquitous variants of metal halide lamps which exhibit strong line spectra. Additionally, it is significant to note that the shape of the spectrum is substantially preserved between the first and the second spectra. However, due to the spectral shift, it will be seen that the amplitude of the spectrum shown in Figure 2, which peaks at 490 nanometers is higher at the lower wavelengths and lower at the higher wavelengths than that shown in Figure 3, which peaks at 515 nanometers.

Although the spectral energy distributions which are shown in Figures 2 and 3 are significantly shifted from each other, they by no means represent the extremes in what is available in the practice of the invention. That is, lesser or greater amounts of fill can be used to achieve shifts in the spectrum toward shorter or longer wavelengths respectively. This is illustrated in Figure 4, which is a graph of peak wavelength vs. sulfur density for the lamp which is shown in Figure 1.

With regard to the choice between a sulfur containing substance, a selenium containing substance or combinations thereof, the following is to be noted. For a given fill density sulfur will provide a higher color temperature and selenium a lower color temperature. Furthermore, a fill in which a combination of sulfur and selenium is used has the advantage that higher total

vapor pressures can be obtained from the two somewhat independent partial pressures, and a further shift to the red can be obtained. Additionally, it has been determined that a fill comprising a mixture of sulfur and selenium provides a spectrum having a shape as shown in Figures 2 or 3. It is contemplated that the relative shift of the spectrum attained with a bulb using both materials in the fill can be controlled between the extremes of fills containing the only one of the materials by selecting the ratio of sulfur and selenium in the fill. Increasing the sulfur density and decreasing the selenium density will raise the color temperature, and vice versa.

As mentioned above, such lamps may have particular applicability to a red/green/blue (RGB) color display system. The region of the chromaticity diagram extending from about .200 to about .490 on the x axis, and about .200 to about .450 on the y axis is white light, while various subregions will have a discernable tint. A source which falls within the white region is suitable for use in an RGB color system in which the light from the source is separated into the three primary color beams which are modulated imagewise and recombined to form a color image. It is however, desirable to be able to shift the spectrum while preserving its shape in order to provide an optimum spectrum for a particular RGB system.

According to another embodiment of the invention, the spectral energy distribution of a particular lamp can be controlled during lamp operation. In this embodiment the effective fill density is changed by increasing the cooling of the bulb, such as by increasing the pressure of the cooling air which is delivered to cooling jets 9A, 9B, 9C, 9D in Figure 1 to the point that some of the fill in the bulb condenses on the inside of the envelope and ceases to participate in the discharge. A bulb may be modified to provide a special area or a side pipe may be provided in which the fill material will be selectively caused to condense. In this way the condensed fill will not interfere with the light emission from the bulb. The special area may simply be a certain area of an unmodified standard shaped bulb which is provided

with augmented cooling. For example in the lamp shown in figure one the cooling jet 9A which cools the lowest part of the bulb, whereat the stem is connected, may be operated at higher air pressure. In this way, fill condensation will occur at that area of the bulb which is out of the way of the emission directed at towards the lamps optics. Although not shown the optics may comprise a reflector with its optical axis coincident with the cylindrical axis of the cavity.

A system for controlling bulb temperature is shown in Figure 5, which appears in U.S. Patent No. 4,978,891, which is incorporated herein by reference.

Referring to Figure 5, filter 30 is provided and is located so as to receive light from the lamp. Filter 30, for example, may be a band pass filter which transmits light only in the blue region of the spectrum, and is followed by photodetector 32 which generates a comparison signal.

Function generator 34 is also provided, which is capable of generating a preselected function signal of desired, arbitrary shape. The outputs of photodetector 32 and function generator 34 are fed to comparator 36, which generates a difference signal. This difference signal is fed back to the cooling fluid supply system to control the amount of cooling fluid impinging on the bulb.

For example, in Figure 5, an exemplary control for the cooling fluid supply is a needle valve 40, the position of which is controlled by stepping motor 42. Alternatively, the input to pressurized air supply 20 could be throttled or the supply could be vented, to control cooling.

Thus in accordance with this embodiment, whenever the output in the blue region is different than that which has been programmed by function generator 34, a difference signal results, which causes the cooling of the lamp bulb 8 to vary, until the difference signal is at or approaches zero.

Another method of changing the shifting spectrum would be to vary the power while maintaining constant cooling. This would result in partial

condensation of the fill and would change the effective fill density in the bulb resulting in a shift of the spectral energy distribution.

A combination of sulfur and selenium containing fill substances can be advantageously used in the embodiments in which the spectrum is shifted during operation. Sulfur has a higher vapor pressure as well as a somewhat higher color temperature. As a discharge bulb containing both sulfur and selenium is cooled to the point that a portion of the fill condenses on the bulb 7 wall, the overall operational fill density will be lowered leading to a higher color shift (i.e by way of a shift of the spectrum to the blue). A second compounding effect is that the selenium will condense out faster leaving an effective operating fill which has more sulfur, which by its nature gives a higher color temperature.

It should be noted that as used herein, the term "primary radiating component" means that fill component which provides a radiation output which is at least as great as any other fill component.

It should be understood that the above embodiments have been illustrated in connection with specific lamps, but that other specific lamp structures may be used as well. For example, the shape of the microwave cavity as well as the microwave coupling schemes may be varied, and the invention is also applicable lamps which are powered with radio frequency (r.f.) energy, as well as to arc lamps.

Referring to Figure 6, a lamp embodiment which is used to illustrate a further aspect of the present invention is depicted. Lamp 11 is an electrodeless lamp which is powered by microwave energy. Bulb 12, which contains a high pressure fill, and is made of quartz or other suitable material, is supported in a microwave cavity, which is comprised of conductive housing 13 and mesh 14. Magnetron 15 generates microwave energy, which is fed by waveguide 16, to coupling slot 17 of the microwave cavity.

This excites the bulb fill to a plasma state, whereupon light is emitted by the fill, which is transmitted out of the cavity through mesh 14. The mesh

is metallic, and is constructed so that it is substantially opaque to microwave energy, while being substantially transparent to the light which is emitted by bulb 12. The bulb is rotated by rotator 18, and the bulb envelope is cooled by gas which is fed in to plenum 19 and out through nozzles 19A.

A further embodiment of a lamp is shown in Figure 7. This is an arc lamp 60 which is comprised of quartz envelope 62 having electrodes 64 and 66, and containing fill 28. To excite the fill, an A.C. voltage is impressed across the electrodes, whereupon an arc discharge occurs therebetween.

As in the case of the electrodeless lamp, the fill contains a sulfur or selenium containing substance which is present at a high pressure of at least about 1 atmosphere and preferably in the range of about 2-20 atmospheres. An electrical voltage is applied across the electrodes such that a suitably high power density exists. Additionally, the electrodes 64 and 66 are made of or plated with a special material, to prevent chemical reactions with the fill gas which may lead to electrode deterioration.

The sulfur and selenium containing lamps described herein radiate a molecular spectrum in the visible region. A representative spectrum is depicted in Figure 8 and is seen to be smooth, with the sharp peaks which are characteristic of atomic spectra being notably absent. The spectrum shown in Figure 8 resulted when an electrodeless lamp such as is shown in Figure 6 having a bulb of spherical shape of internal diameter 2.84 cm was filled with .062 mg-moles/cc of sulfur and 60 torr of argon, and was excited with microwave energy at a power density of about 280 watts/cc.

It has been observed that while light having the spectrum which is shown in Figure 8 would be emitted from somewhere on the surface of the bulb, light having the identical spectrum would not in general be emitted from every point on the surface of the bulb. An accepted way of expressing spectral output is in terms of "color temperature" or "correlated color temperature", and thus stated differently, it was found that the color temperature or correlated temperature of the light varied as a function of the

angle from which the bulb is observed. This is depicted in Figure 9, which is a graph of correlated color temperature vs. observation angle. It is seen that as one progresses from the 0° line shown in Figure 6, through the 900 line, and then on to a displacement of 180°, the color of the emitted light changes. As mentioned above, for many applications, a bulb with a spatially uniform color temperature would provide a better result. Additionally, the phenomenon of spatial "color separation" becomes more pronounced as the power level of the excitation energy decreases, either by virtue of dimming the lamp, or operating it at a lower power. It was also found that it may not be possible to dim the lamp as much as is desired, since the lamp may extinguish when a low power threshold is crossed.

It was further found that the above-described sulfur and/or selenium containing lamps do not always start in a fast and reliable fashion. In the case of the lamp shown in Figure 6, it is standard to use a supplemental light source to provide additional energy to initiate starting. However, even with the use of such supplemental light source, starting may not always be reliable.

In accordance with an aspect of the present invention, a substance is added to the bulb fill which has a low ionization potential. Such a substance has electrons which are loosely bound, thereby making them easy to dislodge. It has been found that when such a substance is added to the bulb fill, one or more of the uniformity of the color temperature, bulb extinguishing characteristics, and bulb starting characteristics, are improved.

One class of low ionization potential materials are the alkalai metals, and it has been found that when an alkalai metal containing substance is added to the fill, the following advantages result:

a) the color temperature of the emitted light around the surface of the bulb becomes spatially more uniform, and this is in general true even at lower power densities;

b) the lamp starts more reliably; and

c) the lamp may be operated at lower power levels without extinguishing.

The alkalai metals may be used in either elemental or compound form, and one such substance which may be used is sodium. Other alkalai metals are lithium, potassium, rubidium, and cesium. By way of non-limitative examples, compounds in the form of halides or sulfides may be used, for example NaI, Na_2S or LiI. Adding a sodium containing substance to the bulb fill may also have the effect of providing spectral emphasis in the red part of the spectrum.

Another class of low ionization potential materials are the III B metals. It was found that when a III B metal containing substance was added to the fill, the color temperature of the emitted light become more uniform, and this is in general true even at lower power densities. Furthermore, it is possible to operate the lamp at lower power levels without extinguishing. The III B metals include indium, thallium, gallium, aluminum, and may be used in elemental or compound form, for example combined as halides such as InI, TlI, TlBr, or combined as sulfides such as InS, TI_2Se, or TI_2S.

A further grouping of low ionization materials are the alkaline earth or rare earth elements. Such substances cause the lamp to start more reliably. The alkaline earth metals are barium, beryllium, magnesium, calcium, strontium, and radium, and they may be used in elemental or compound forms, for example combined as halides such as $CaBr_2$, BaI_2, SrI_2 and sulfides, such as CaS, BaS, BaSe. The rare earth elements are yttrium, scandium, and lanthanum through lutetium. The improved starting is due to the low work functions of the alkaline earth and rare earth elements.

It was further found that the addition of mercury to the bulb improved starting reliability.

The amount of the above-mentioned additives to be used to produce optimum results for different applications may vary. For example, for the lamp desired above which produced the spectrum of Figure 8, Na may be

added in an amount of at least .001 mg/cc, In may be added in an amount of at least .01 mg/cc, and Ba may be added in an amount of at least .005 mg/cc. Additives may produce spectral emphasis, so that the resultant spectrum may not be identical to that shown in Figure 8. In the case of mercury, at least .1 mg/cc should be used. It may also be possible to use a combination of the additives disclosed herein together in the lamp fill. It is further noted that since some of the above-mentioned additives improve lamp starting, it may be possible, in certain implementations, to eliminate the inert gas constituent of the fill.

The following Examples are illustrative:

EXAMPLE I

In a lamp as shown in Figure 6, a bulb which is 2.84 cm in interior diameter was filled with 24 mg of S (2 mg/cc) and 60 torr of Ar,, and operated at a suitably high power density. A figure of merit identified as "uniformity", is defined as the ratio of the minimum to maximum intensity of the light outputted by the bulb considering all angular positions except where the bulb is obstructed, e.g., by a narrow screen ring. The reason that the "uniformity" is a figure of merit representative of the color separation effect is that for lamps of this type, regions of lower color temperature also have lower output. The uniformity for the lamp was found to be .81.

EXAMPLE II

A lamp as described and operated in connection with Example I was filled with 24 mg of S (2mg/cc), 60 torr of Ar., and .2 mg of NaI (.017 mg/cc) which contained .031 mg (.0026 mg/cc) of Na. The "uniformity" was .97, and a uniform color temperature around the angular extent of the bulb could be visually observed.

EXAMPLE III

A lamp as described and operated in connection with Example I was filled with 24 mg of S (2 mg/cc), 60 torr of Ar., and .3 mg of InI (.025 mg/cc) containing .143 mg (.012 mg/cc) of In. The "uniformity" was .91.

EXAMPLE IV

A lamp as described and operated in connection with Example I was filled with 24 mg of S (2 mg/cc), 60 torr of argon, and 1 mg (.083 mg/cc) of BaS containing .81 mg (.068 mg/cc) of Ba or instead of the BaS, 7 mg of Hg. An improvement in the starting reliability of the lamp was observed.

It should be noted that in term "power density", the volume (cc) refers to the volume of the light emitting gas rather than to the volume of the bulb. Further, it should be noted that the term "operating temperature" as used herein is the temperature which is attained by the bulb during operation.

It is significant that when fill additives as discussed herein are used it may be possible to operate the lamp at significantly lower power densities than indicated above without causing objectionable color separation or bulb extinguishment.

A further embodiment of the invention is shown in Figure 10, which is an illustrative example of a lamp which is excited with electromagnetic energy in the radio frequency range. In this regard, the term "electromagnetic energy" as used herein refers to both microwave and r.f. modes.

Referring to Figure 10, r.f. source 70 generates r.f. power which is fed to induction coil 72. Bulb 74, which houses a sulfur or selenium containing fill as described above also includes additives which may include an alkalai halide containing substance or a III B metal containing substance as discussed above. In the operation of the lamp, r.f. energy from the induction coil 42 is coupled to the bulb fill, thereby exciting it to produce a spectrum in the visible range as previously described. The additives mentioned above permit operation at lower power densities, which in general is a significant advantage, and may be a particular advantage in the use of r.f. lamps. The invention may be applied to the different types of r.f. lamps, which include by way of non-limitative example, inductively and capacitively coupled lamps.

As is well known to those skilled in the art, the particular form of the electrodeless lamp heretofore described is exemplary only, and other specific shapes and types of cavities, for example, substantially all mesh type, as well as different types of coupling modes using one or more power sources, and one or more waveguides or other coupling modes may be used.

For example, Figure 11 illustrates a lamp wherein coupling is effected in a coaxial mode. Microwave power is provided to inner and outer conductors 82 and 84 for coupling to bulb 86. A conductive mesh 87 is connected to the outer conductor. A tuning element 88 may be provided to help in starting the lamp.

Figure 12 depicts a further embodiment which is powered by r.f. or microwave power. Power from high frequency power source 104 is coupled to inner conductor 107 and outer conductor 106, which is a conductive mesh, the bulb 101 is supported between inner conductive member 107A and inner conductive member 107B. The embodiment shown in Figure 12 may be considered to be a form of capacitive coupling.

As discussed above, the sulfur and selenium containing lamps described herein radiate a molecular spectrum in the visible region. A representative spectrum is smooth, with the sharp peaks which are characteristic of atomic spectra being notably absent.

Figure 13 depicts an embodiment of the invention wherein electrodeless lamp 110 is shown which has a fill wherein a sulfur containing substance or a selenium containing substance is the primary radiating component, as described above. Bulb 112 is secured in approximately spherical reflector 114 by bulb stem 115. The bulb stem may be arranged for rotation while streams of cooling fluid are directed at the bulb, to effect cooling (not shown). A mesh 116 contains microwave energy while allowing the emitted light to escape. Microwave energy is fed to the cavity via waveguide 118, and is coupled thereto through slot 119.

In accordance with an aspect of the invention, reflector 114 is approximately spherical in shape. This causes the light to be reflected by the reflector back into the bulb. The resultant light which is re-emitted from the bulb is stronger in higher wavelengths than in the case where light is not reflected back into the bulb.

This was demonstrated by the experimental setup depicted in Figure 13, wherein the light emitted by the lamp is fed through baffles 120 and 121, which have co-linear openings 122 and 124 respectively disposed therein. A diffuser 125 backed by monochromator 126 is located in line with the baffle openings so as to receive the light coming therethrough.

Spectral measurements were taken for the case where the inside of reflector 114 is blackened, so as to be non-reflective, and the case where the reflector is shiny. The bulb was 2 cm in inner diameter and was filled with 2 mg/cc of elemental sulfur and 60 torr of argon, and was excited at a power density of about 325 watts/cc.

The resultant spectrum for the case where the reflector is blackened is shown in Figure 14, while the spectrum for the case where the reflector is shiny is shown in Figure 15. The data is expressed in irradiance (power per wavelength interval per square centimeter). As can be seen, not only does the lamp with shiny reflector produce a more intense output, but there is a greater concentration of higher wavelengths. This is shown more exactly in Figure 16, which is a bar graph of the output power ratio of the lamp for shiny/black reflector. It is seen that the power ratio is about a factor of 2 in the yellow region of the spectrum, and a factor of about 3 in the red region. Thus, a lamp which is rich in such wavelengths may be produced by following the teachings of the invention.

Additionally, it was found that the output from the lamp with the shiny reflector was more uniform than that of the lamp with the black reflector, and while the bulb in the shiny reflector ran hotter than the bulb in the black

reflector, it did not run much hotter, so that additional light power was obtained with only a modest increase in cooling requirement.

In accordance with a further aspect of the invention, selective wavelengths may be reflected back into the bulb to cause the lamp to emit a spectrum which is more equivalent to the spectrum radiated by a black body. For example, this may be effected with the use of dichroic reflectors in either discrete form, or disposed directly on the bulb in the form of a coating.

For example, if a dichroic reflector in the form of an optically thin filter which reflects only in the green region is disposed on the bulb, the output in the green region of the spectrum may be substantially cut, for example by a factor of 2. At the same time, the output in the red region of the spectrum increases.

Thus, a lamp having a spectrum produced by a sulfur fill modified as described above will emit more nearly like a black body. This is shown in Figure 17, which is a 1931 chromaticity diagram. The position of the unfiltered output of such a lamp is shown at point D, where x = .320 and y = .371, while the position of the filtered output using a dichroic reflector which reflects only in the green region is shown at point E, which is at the black body line, where x = .341 and y = .346.

Figure 18 shows an embodiment of the invention using a dichroic reflector/filter such as described above. In this embodiment, the dichroic reflector 130 is disposed on spherical bulb 92 which is located in reflector 134 which is closed by mesh 136. As known to those skilled in the art, such a dichroic reflector may be comprised of alternating layers of materials having different indices of refraction. For example, for reflecting in the green or green-yellow part of the spectrum around 540 nm with about a 50 nm bandwidth, a dichroic reflector comprised of 5 sets of alternating layers of zirconium oxide and silicon dioxide using layers 67.5 and 89 nm thick, respectively, may be used. As is known, the thickness and number of layers may be varied to change the spectral band which is reflected.

In accordance with a further aspect of the invention, the spectral output of the lamp may be tailored for particular applications by reflecting back selected wavelengths into the bulb. For example, a lamp in which green radiation is reflected back may be used for horticultural applications such as for plant growth as in greenhouses. Thus, the spectrum of the sulfur-based lamp is inherently high in green wavelengths, and these are attenuated by the dichroic filter, while the red wavelengths, which are useful in inducing plant growth are increased. Wavelengths other than green may be reflected back to produce different resultant spectral outputs.

It should be understood that while the invention has been illustrated in connection with specific embodiments, variations will occur to those skilled in the art, and the scope of the invention is to be limited only by the claims which are appended hereto and equivalents.

CLAIMS

1) A discharge lamp containing a light emitting fill substance which emits throughout the visible region of the spectrum, and which has the property of having a visible spectral characteristic which changes with the density of said fill substance, the characteristic having an increased content of longer wavelengths but not of shorter wavelengths when the density of said fill substance is greater and having an increased content of shorter wavelengths but not of longer wavelengths when the density of said fill substances is smaller.

2) A discharge lamp containing a light emitting fill substance which emits radiation which is primarily in the visible part of the spectrum, and which has the property of having a visible spectral characteristic which while substantially maintaining its shape, shifts to an upper or lower wavelength range with changes in the density of said fill substance.

3) The lamp of claim 2 wherein said fill substance is a sulfur or selenium containing substance.

4) The lamp of claim 3 wherein the discharge lamp is an electrodeless lamp.

5) A visible discharge lamp which provides a spectral energy distribution having a peak at one of many possible peak wavelengths which can be pre-selected, comprising

an envelope which contains a fill wherein the primary visible light emitting component is a substance selected from the group consisting of a sulfur containing substance, a selenium containing substance, and a combination of said substances,

excitation energy generating means, and

means for coupling energy generated by said excitation means to said envelope fill, said lamp during excitation producing an output spectral energy distribution having a peak at a pre-selected wavelength which corresponds to a first particular density of said fill material, wherein other possible pre-selected peak wavelengths correspond to other particular fill densities and said lamp fill is provided with said fill material at said first particular density so as to result in such spectral distribution which has a peak at said pre-selected wavelength.

6) The lamp of claim 5 wherein said lamp is electrodeless.

7) The lamp of claim 6 wherein said sulfur containing substance is elemental sulfur and said selenium containing substance is elemental selenium.

8) A visible discharge lamp which contains a fill based on a material selected from a group consisting of a sulfur containing substance, a selenium containing substance, and a combination of said substances, said lamp during excitation producing an output spectral energy distribution with a peak at a preselected wavelength, said lamp being provided with said material in a preselected amount which corresponds to the wavelength of said preselected peak, wherein said preselected amount is selected to be smaller if it is desired that the spectral energy distribution be peaked more toward the blue range of the spectrum, and said preselected amount is selected to be larger if it is desired that the spectral energy distribution be peaked more towards the red range of the spectrum.

9) The lamp of claim 8 wherein said discharge lamp is an electrodeless discharge lamp bulb.

10) An apparatus according to claim 9 wherein said discharge lamp bulb is an electrodeless discharge lamp bulb for use in a microwave electrodeless lamp.

11) The lamp of claim 10 wherein said sulfur containing substance is elemental sulfur and said selenium containing substance is elemental selenium.

12) A visible discharge lamp comprising a power source, a discharge bulb, a means of exciting said discharge in said discharge bulb, a fill including a primary radiating component selected from a group including sulfur, selenium or combinations thereof provided in said discharge bulb for emitting radiation with a preselected spectral energy distribution, the quantity of said fill chosen to obtain said preselected spectral energy distribution.

13) An apparatus according to claim 12 wherein said power source is a microwave source, said discharge bulb is a microwave electrodeless discharge bulb, and said means of exciting comprises a microwave circuit.

14) A method of making a lamp bulb which will emit in the visible region of the spectrum upon excitation, comprising the steps of,

providing an envelope,

preselecting a spectral energy distribution characteristic having a peak at a desired wavelength, and

filling said envelope with a quantity of a sulfur containing substances, a selenium containing substance, or a combination thereof, which corresponds to said desired wavelength.

15) A method of operating a lamp comprised of a power source, a fill excitation means, a discharge bulb including a fill which is based on a

material selected from the group of a sulfur containing substance, a selenium containing substance, and a combination of said substances, and a means for cooling said bulb, comprising,

controlling the operation of said cooling means in such manner to condense a certain amount of fill in said bulb to control the wavelength range of spectral energy distribution of the lamp output by varying the fill operating pressure.

16) The method of claim 15 wherein the cooling provided by said cooling means may be continuously varied during lamp operation so as to maintain control over said wavelength range.

17) A discharge lamp comprising

a power source,

a fill excitation means,

a discharge bulb containing a fill based on a material selected from the group including a sulfur containing substance, a selenium containing substance, or a combination of said substances, and

a variable cooling means for varying the cooling provided to said bulb so as to condense a controlled portion of said fill material so as to control the wavelength range of the spectral energy emitted by the bulb.

18) The lamp of claim 17 wherein said fill contains a combination of a sulfur containing substance and a selenium containing substance.

19) An apparatus according to claim 18 wherein said means in communication is a side pipe.

20) A visible discharge lamp bulb including a fill comprising sulfur and selenium, said bulb producing an output spectral energy distribution with a preselected color temperature, said bulb being provided with said sulfur and said selenium in proportions which are determined by said preselected color temperature.

21) An apparatus according to claim 20 wherein said lamp bulb is electrodeless.

22) An apparatus according to claim 21 wherein said discharge lamp is electrodeless.

23) A visible discharge lamp comprising

a power source, an excitation means, a discharge bulb, said bulb manufactured by forming an envelope,

inserting a fill comprising a radiating components of sulfur and selenium in amounts and proportions determined in consideration of the desired color temperature of the bulb, wherein higher fill amount and/or a greater proportion of selenium is inserted if it is desired to have a lower color temperature and lesser fill amount and/or a greater proportion of sulfur is inserted if it is desired to have a higher color temperature,

and sealing said bulb.

24) A discharge lamp comprising,

a) an envelope which contains a fill in which a sulfur containing substance is the primary radiating component, the fill also including a substance for improving the spatial uniformity of the color temperature of the emitted light around said envelope, the fill having a pressure of at least about 1 atmosphere at operating temperature, and

b) excitation means for providing excitation energy to said fill.

25) The discharge lamp of claim 24 wherein said substance for improving the spatial uniformity of the color temperature of the emitted light has a low ionization potential.

26) The discharge lamp of claim 25 wherein said substance for improving the spatial uniformity of the color temperature of the emitted light is or includes an alkali metal.

27) The discharge lamp of claim 26 wherein said alkali metal is sodium.

28) The discharge lamp of claim 24 wherein said substance for improving the spatial uniformity of the color temperature of the emitted light is or includes a III B metal.

29) The discharge lamp of claim 28 wherein said III B metal is indium.

30) The discharge lamp of claims 26 or 28 wherein said sulfur containing substance is elemental sulfur.

31) The discharge lamp of claims 27 or 29 wherein said sulfur containing substance is elemental sulfur.

32) An electrodeless lamp comprising,

a) an envelope of light transmissive material for containing a discharge,

b) a fill in said envelope which includes

(i) a sulfur containing substance or a selenium containing substance,

(ii) a substance for improving the spatial uniformity of the color temperature of the emitted light around said envelope, and

(iii) a substance for aiding in starting the discharge, the fill having a pressure of at least about 1 atmosphere at operating temperature, and

c) excitation means for coupling electromagnetic energy to said fill.

33) The electrodeless lamp of claim 32 wherein said substance for improving the spatial uniformity of the color temperature of the emitted light has a low ionization potential.

34) The electrodeless lamp of claim 33 wherein said substance for improving the spatial uniformity of the color temperature of the emitted light is or includes an alkali metal.

35) The electrodeless lamp of claim 34 wherein said alkali metal is sodium.

36) The electrodeless lamp of claim 33 wherein said substance for improving the spatial uniformity of the color temperature of the emitted light is or includes a III B metal.

37) The electrodeless lamp of claim 36 wherein said III B metal is indium.

38) An electrodeless lamp comprising,

a) an envelope which contains a fill in which a sulfur or selenium containing substance is the primary radiating component, the fill also including a substance for improving the spatial uniformity of the color temperature of the emitted light around said envelope, the fill having a pressure of at least about 1 atmosphere at operating temperature, and

b) excitation means for coupling electromagnetic energy to said envelope.

39) The electrodeless lamp of claim 38 wherein said substance for improving the spatial uniformity of the color temperature of the emitted light has a low ionization potential.

40) The electrodeless lamp of claim 39 wherein said substance for improving the spatial uniformity of the color temperature of the emitted light is or includes an alkalai metal.

41) The electrodeless lamp of claim 40 wherein said alkalai metal is sodium.

42) The electrodeless lamp of claim 39 wherein said substance for improving the spatial uniformity of the color temperature of the emitted light is or includes a III B metal.

43) The electrodeless lamp of claim 42 wherein said III B metal is indium.

44) The electrodeless lamp of claims 40 or 42 wherein the sulfur containing substance is elemental sulfur and the selenium containing substance is elemental selenium.

45) A discharge lamp comprising,

a) an envelope which contains a fill in which elemental selenium is the primary radiating component, the fill also including a substance for improving the spatial uniformity of the color temperature around said

envelope, the fill having a pressure of at least about 1 atmosphere at operating temperature, and

b) excitation means for providing excitation energy to said fill.

46) The discharge lamp of claim 45 wherein said substance for improving uniformity is or includes an alkalai metal.

47) The discharge lamp of claim 45 wherein said substance for improving uniformity is a III B metal.

48) A discharge lamp comprising,

a) an envelope which contains a fill in which a sulfur containing substance or elemental selenium is the primary radiating component, the fill also including an alkalai metal containing substance and having a pressure of at least about 1 atmosphere at operating temperature, and

b) excitation means for coupling excitation energy to said envelope.

49) A discharge lamp comprising,

a) an envelope which contains a fill in which a sulfur containing substance or elemental selenium is the primary radiating component, the fill also including a III B metal containing
substance and having a pressure of at least about 1 atmosphere at operating temperature, and

b) excitation means for coupling excitation energy to said envelope.

50) The lamp of claim 49 wherein said III B metal is indium.

51) A discharge lamp comprising,

a) an envelope which contains a fill in which a sulfur containing substance or elemental selenium is the primary radiating component, the fill

also including an alkaline earth metal containing substance and having a pressure of at least about 1 atmosphere at operating temperature, and

b) excitation means for coupling excitation energy to said envelope.

52) The lamp of claim 51 wherein said alkaline earth metal is barium.

53) The lamp of claims 48 or 49 wherein the fill further includes a rare gas.

54) An electrodeless lamp comprising,

a) an envelope which contains a fill in which a sulfur containing or selenium containing substance is the primary radiating component, the fill also including an additive for improving lamp operation, the fill having a pressure of at least about 1 atmosphere at operating temperature, and

b) excitation means for coupling electromagnetic energy to said envelope.

55) The lamp of claim 54 wherein said additive is or includes an alkalai halide.

56) The lamp of claim 54 wherein said additive is or includes a III B metal.

57) The lamp of claim 54 wherein said additive is or includes an alkaline earth metal.

58) An electrodeless lamp bulb comprised of a light transmitting envelope which contains a fill in which a sulfur containing substance is the primary radiating component, the fill also including an alkalai metal containing

substance, and said fill constituents being present in amounts to produce a fill pressure of at least 1 atmosphere at operating temperature.

59) The bulb of claim 58 wherein said alkalai metal is sodium.

60) An electrodeless lamp bulb comprised of a light transmitting envelope which contains a fill in which a sulfur containing substance is the primary radiating component, the fill also including a III B metal containing substance, and said fill constituents being present in amounts to produce a fill pressure of at least 1 atmosphere at operating temperature.

61) The bulb of claim 60 wherein said III B metal containing substance is indium.

62) The bulb of claim 58 or 60 wherein said sulfur containing substance is elemental sulfur.

63) An electrodeless lamp bulb comprised of a light transmitting envelope which contains a fill in which a sulfur containing substance is the primary radiating component, the fill also including an alkaline earth halide containing substance, and said fill constituents being present in amounts to produce a fill pressure of at least 1 atmosphere at operating temperature.

64) The lamp of claim 63 wherein said alkaline earth halide is barium.

65) An electrodeless lamp bulb comprised of a light transmitting envelope which contains a fill in which a selenium containing substance is the primary radiating component, the fill also including an alkalai metal containing

substance, and said fill constituents being present in amounts to produce a fill pressure of at least 1 atmosphere at operating temperature.

66) The bulb of claim 65 wherein said alkalai metal is sodium.

67) An electrodeless lamp bulb comprised of a light transmitting envelope which contains a fill in which a selenium containing substance is the primary radiating component, the fill also including a III B metal containing substance, and said fill constituents being present in amounts to produce a fill pressure of at least 1 atmosphere at operating temperature.

68) The bulb of claim 67 wherein said III B metal containing substance is indium.

69) The bulb of claims 65 or 67 wherein said selenium containing substance is elemental selenium.

70) An electrodeless lamp bulb comprised of a light transmitting envelope which contains a fill in which a selenium containing substance is the primary radiating component, the fill also including an alkaline earth halide containing substance, and said fill constituents being present in amounts to produce a fill pressure of at least 1 atmosphere at operating temperature.

71) The lamp of claim 70 wherein said alkaline earth halide is barium.

72) The lamp of claims 58 or 65 wherein the fill further includes an inert gas.

73) A lamp bulb comprised of a light transmitting envelope which includes electrodes in the interior of the envelope, and which contains a fill in which

a sulfur containing substance is the primary radiating component, the fill further including an additive, and having the constituents present in amounts so as to produce a fill pressure of at least 1 atmosphere at operating temperature.

74) A lamp bulb comprised of a light transmitting envelope which includes electrodes in the interior of the envelope and which contains a fill in which elemental selenium is the primary radiating component, the fill also including an additive, the fill constituents being present in amounts so that a fill pressure of at least 1 atmosphere is produced at operating temperature the fill pressure being primarily controlled by the selenium.

75) The bulb of claim 73 or 74 wherein the additive is an alkalai halide containing substance.

76) The bulb of claim 75 wherein the alkalai halide is sodium.

77) The bulb of claims 73 or 74 wherein the additive is a III B metal containing substance.

78) The bulb of claim 77 wherein the III B metal is indium.

79) The bulb of claims 73 or 74 wherein the additive is an alkaline earth metal containing substance.

80) The bulb of claim 79 wherein said alkaline earth metal is barium.

81) A discharge lamp having a bulb containing a fill wherein a sulfur containing substance is the primary radiating component, and having means for reflecting radiation which is emitted by the bulb back into the bulb.

82) The lamp of claim 81 wherein said means for reflecting radiation is a spherical reflector.

83) The lamp of claim 81 wherein said means for reflecting radiation modifies the spectral output of the bulb so as to be closer or equivalent to that of a black body.

84) The lamp of claim 83 wherein said means for reflecting radiation comprises a dichroic reflector.

85) The lamp of claim 81 wherein said means for reflecting radiation preferentially reflects wavelengths in the green range.

86) The lamp of claim 85 wherein said means for reflecting radiation comprises a dichroic reflector which is disposed on said bulb.

FIG. 1

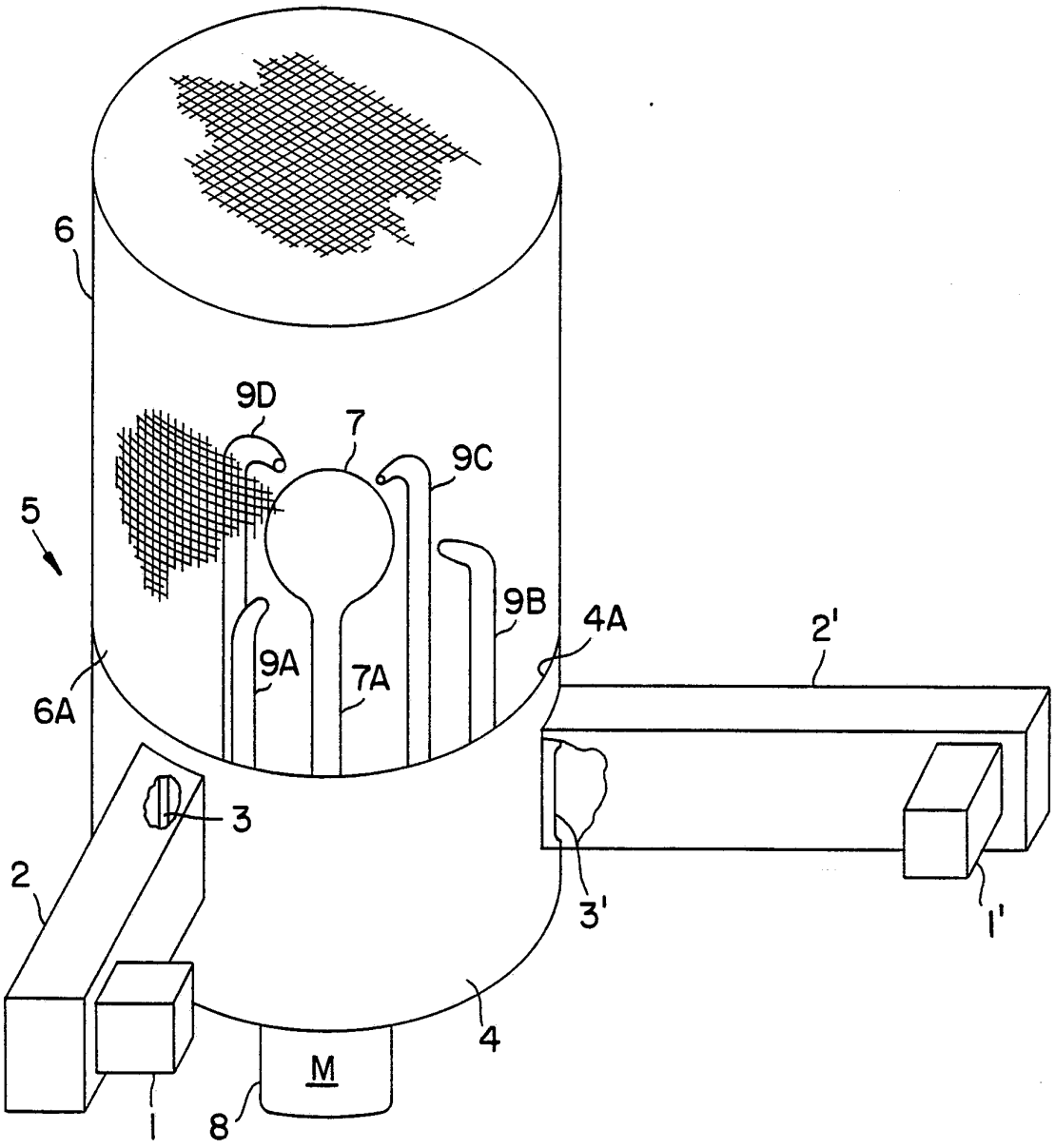

FIG. 2

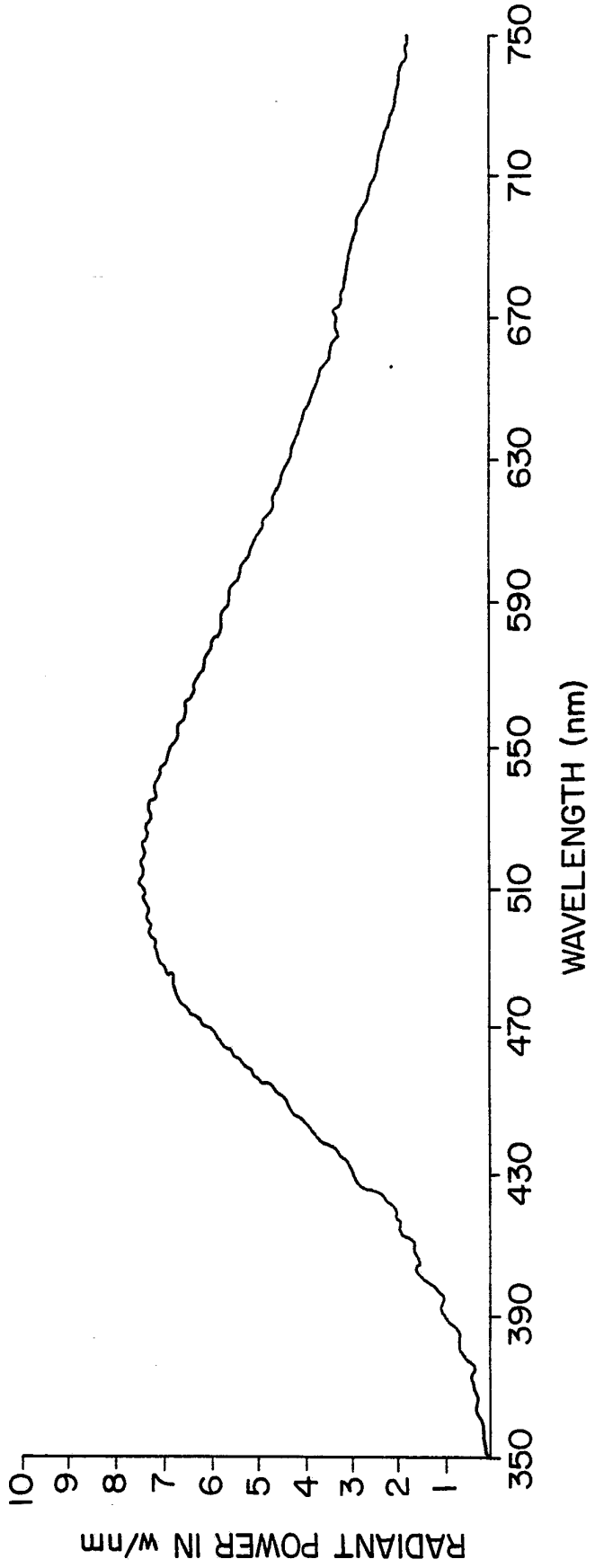
RADIANT POWER IN w/nm
10
9
8
7
6
5
4
3
2
1
350
390
430
470
510
550
590
630
670
710
750
WAVELENGTH (nm)

FIG. 3

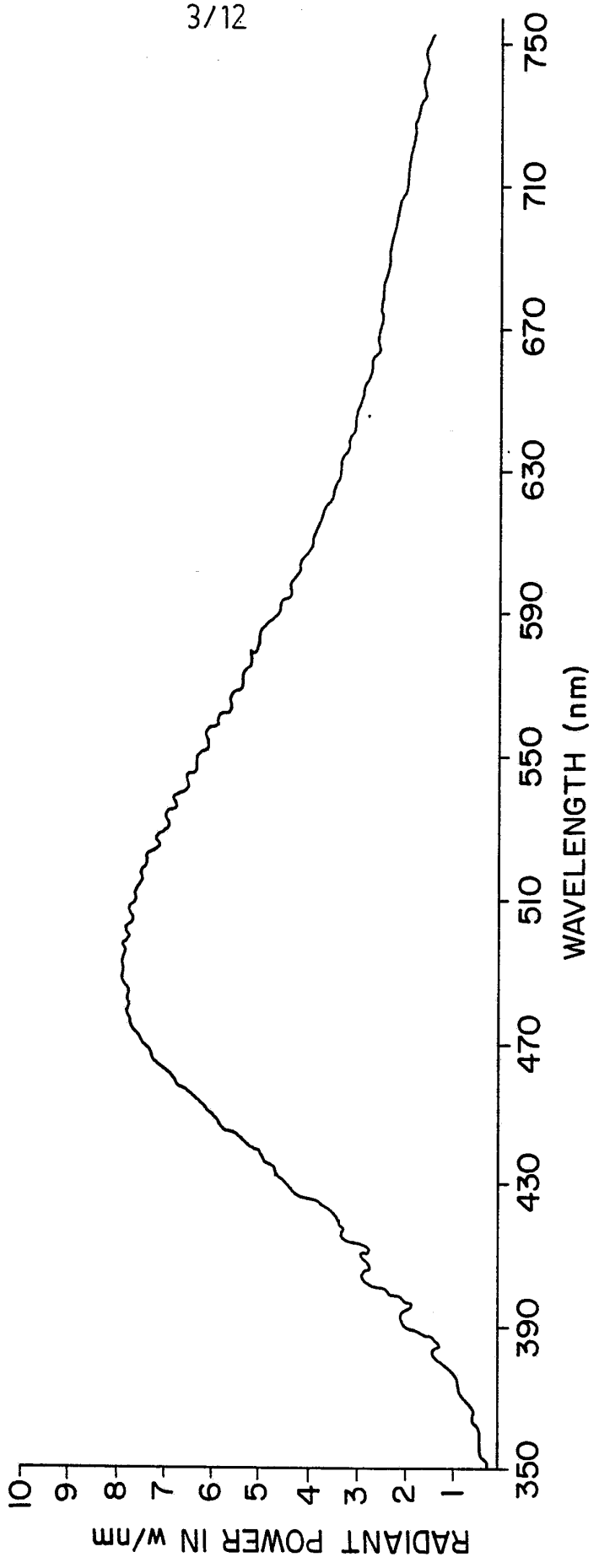
RADIANT POWER IN w/nm
10
9
8
7
6
5
4
3
2
1
350
390
430
470
510
550
590
630
670
710
750
WAVELENGTH (nm)

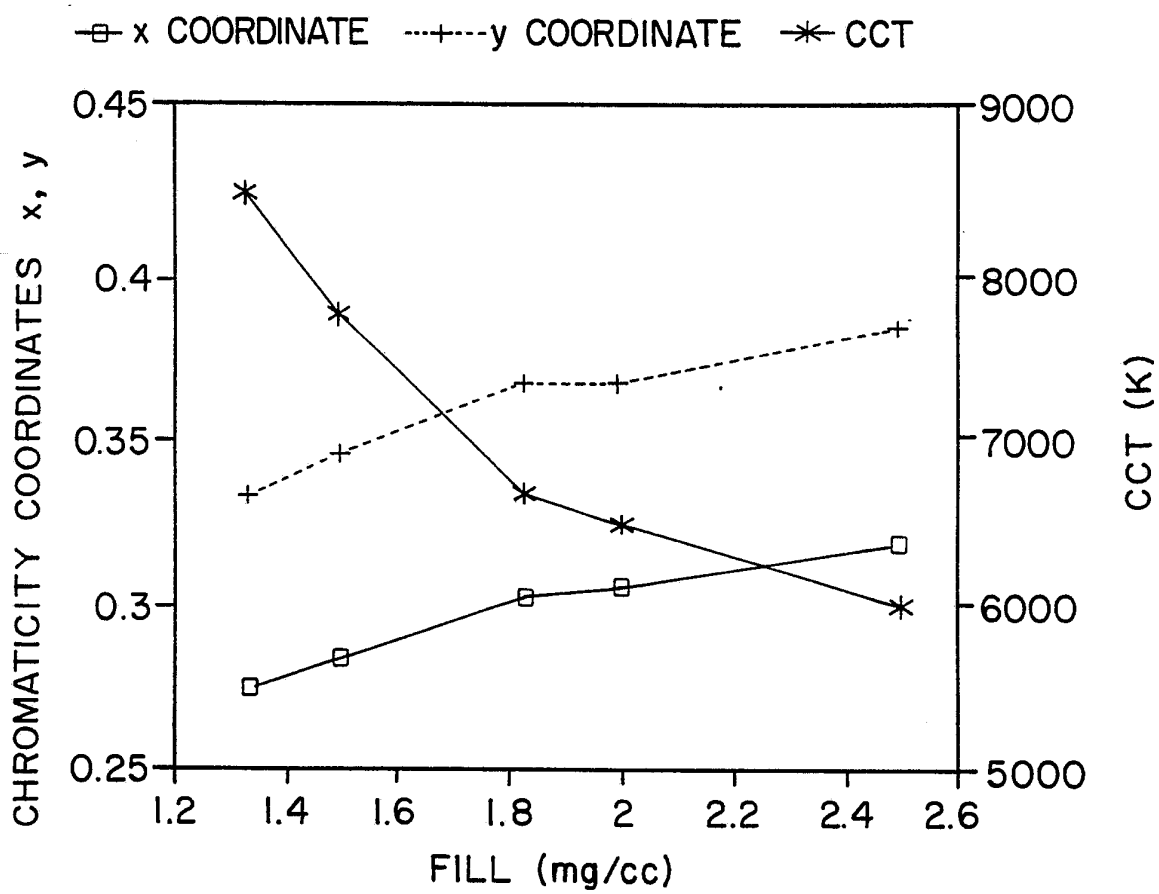
x COORDINATE
y COORDINATE
CCT
CHROMATICITY COORDINATES x, y
0.45
0.4
0.35
0.3
0.25
9000
8000
7000
6000
5000
CCT (K)
1.2
1.4
1.6
1.8
2
2.2
2.4
2.6
FILL (mg/cc)

FIG. 4

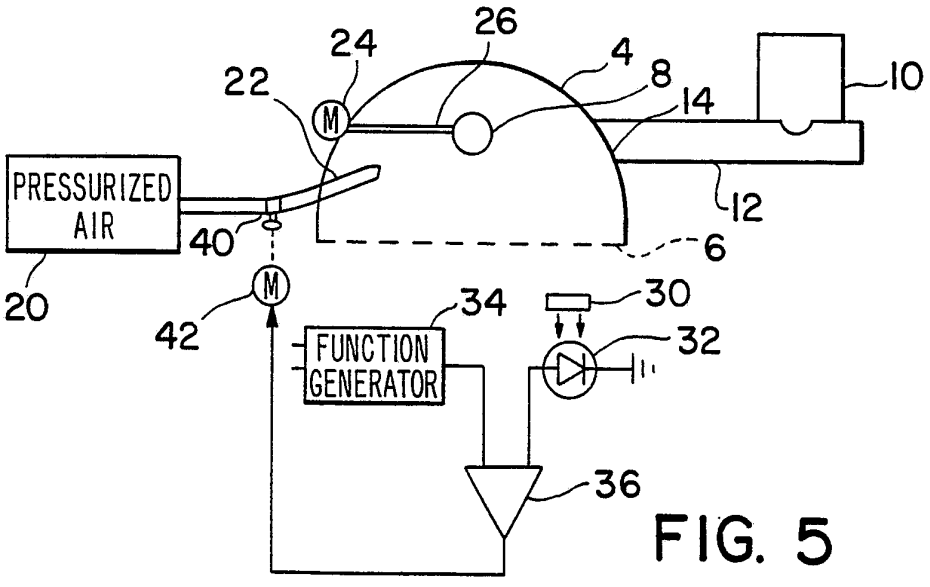
PRESSURIZED AIR
20
40
42
22
24
26
4
8
14
10
12
6
M
34
FUNCTION GENERATOR
30
32
36

FIG. 5

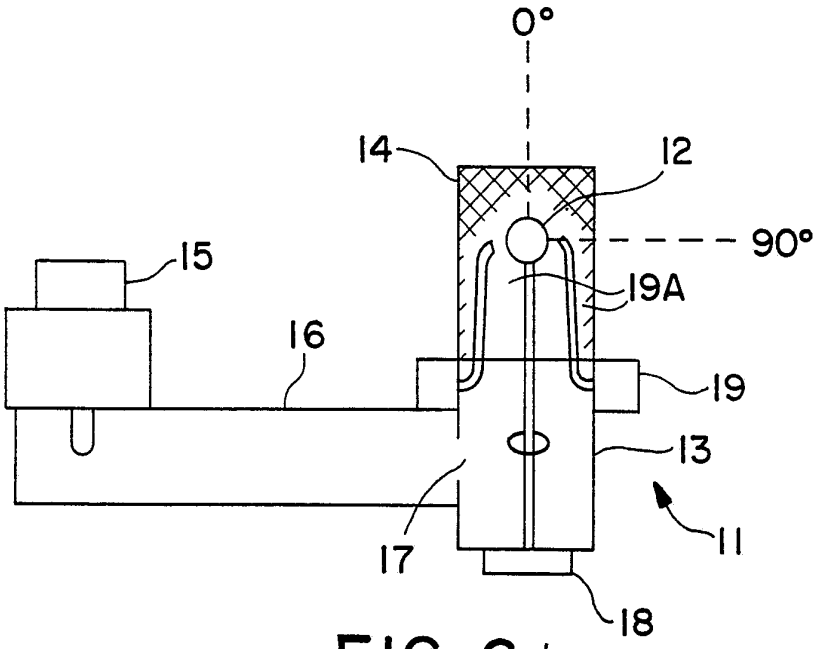

FIG. 6

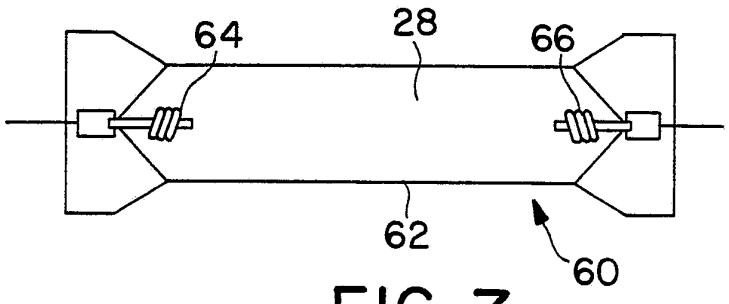

FIG. 7

FIG. 8

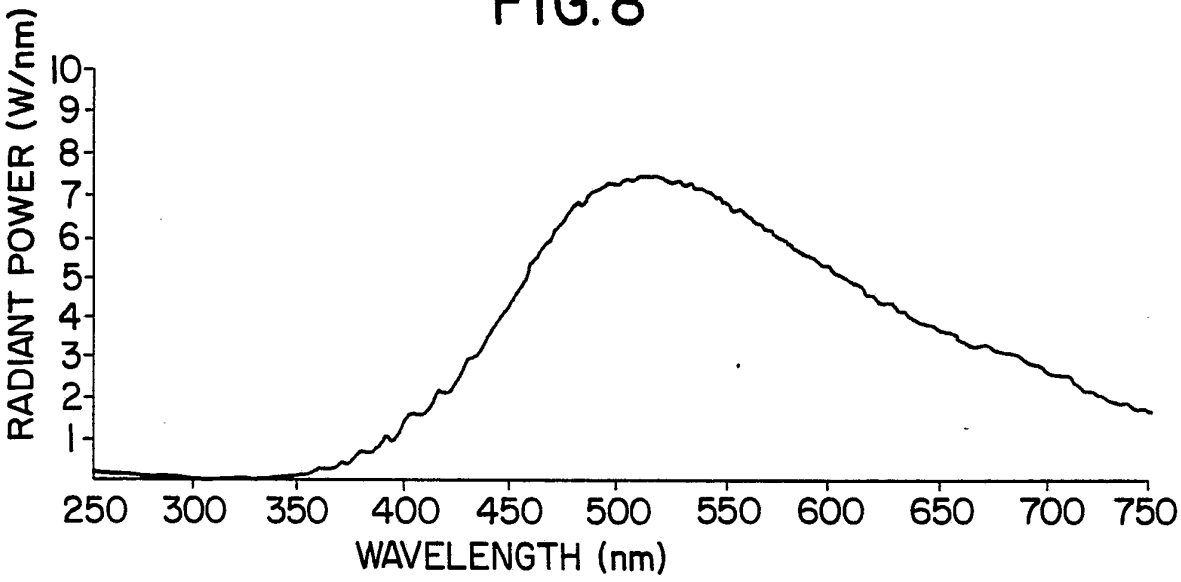
RADIANT POWER (W/nm)
10
9
8
7
6
5
4
3
2
1
250 300 350 400 450 500 550 600 650 700 750
WAVELENGTH (nm)

FIG. 9

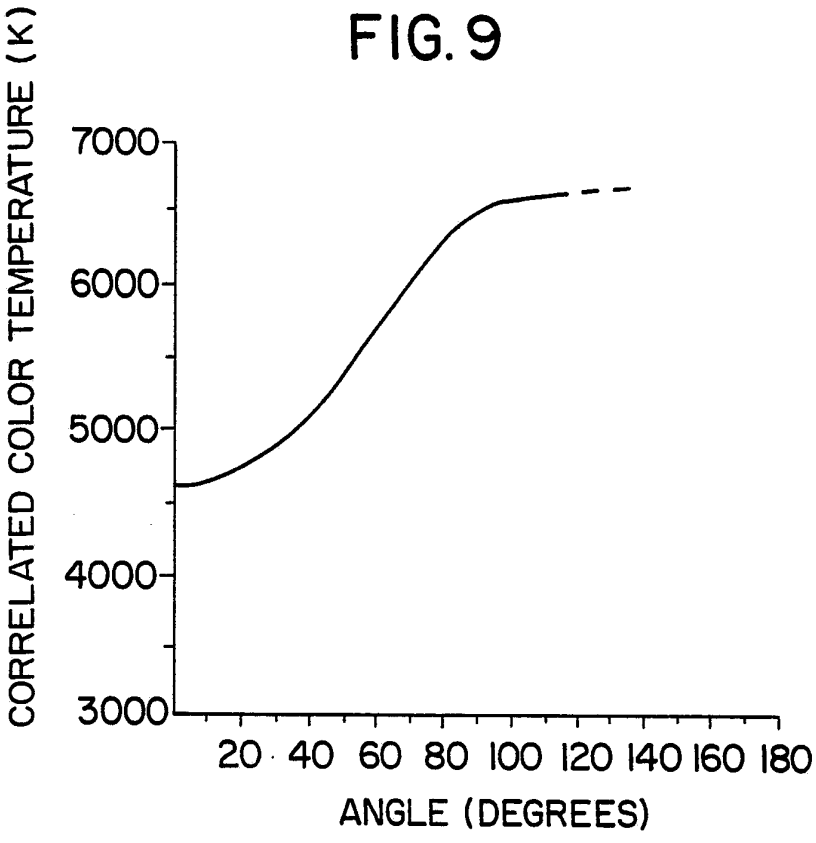
CORRELATED COLOR TEMPERATURE (K)
7000
6000
5000
4000
3000
20 40 60 80 100 120 140 160 180
ANGLE (DEGREES)

FIG. 10

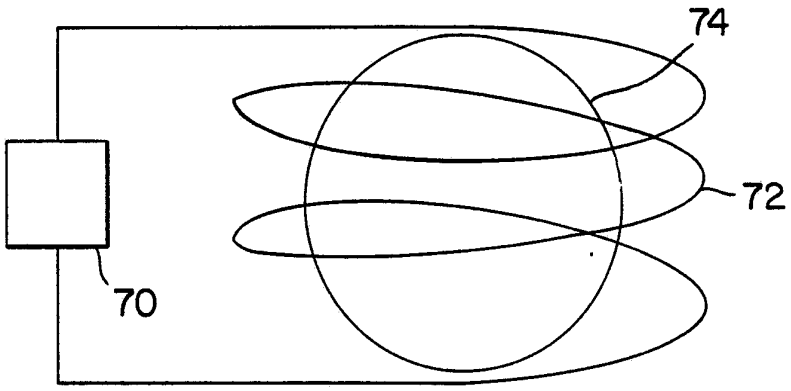

FIG. 11

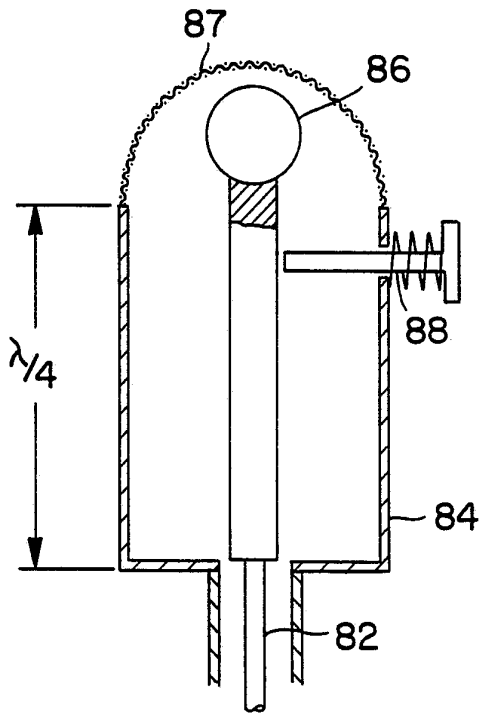

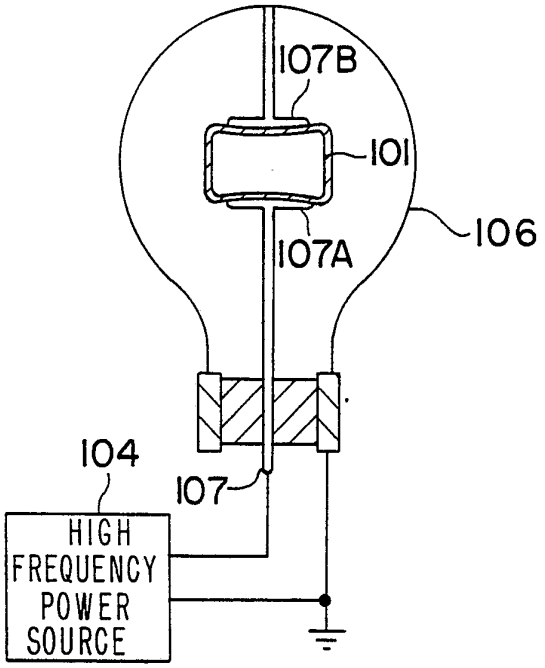
107B
101
106
107A
104
107
HIGH FREQUENCY POWER SOURCE

FIG. 12

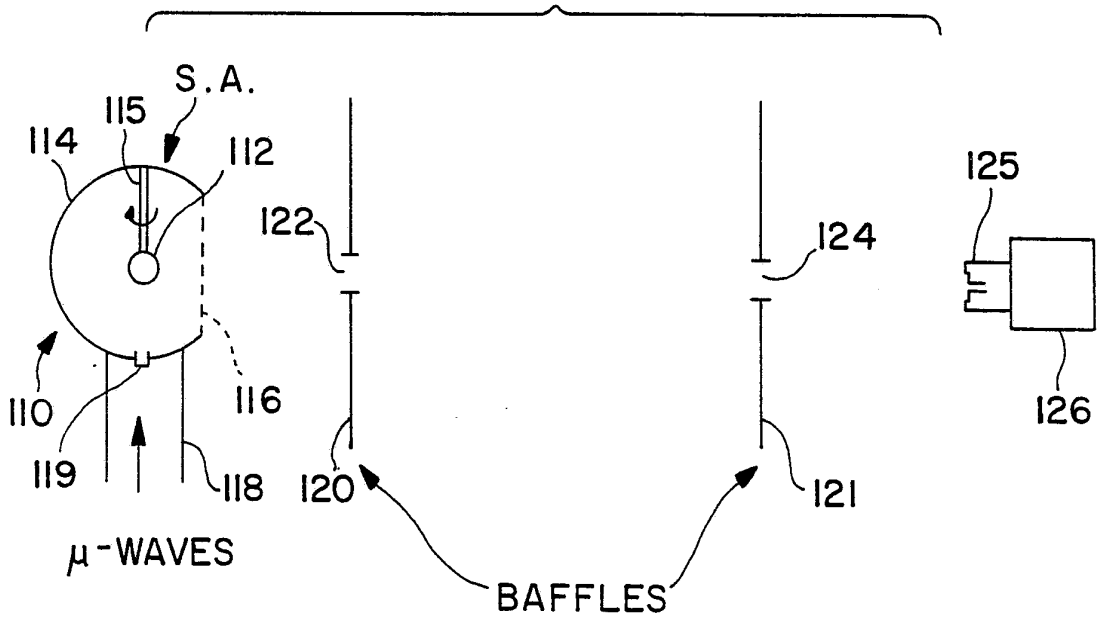
S.A.
115
114
112
122
124
125
110
116
119
118
120
121
126
μ-WAVES
BAFFLES

FIG. 13

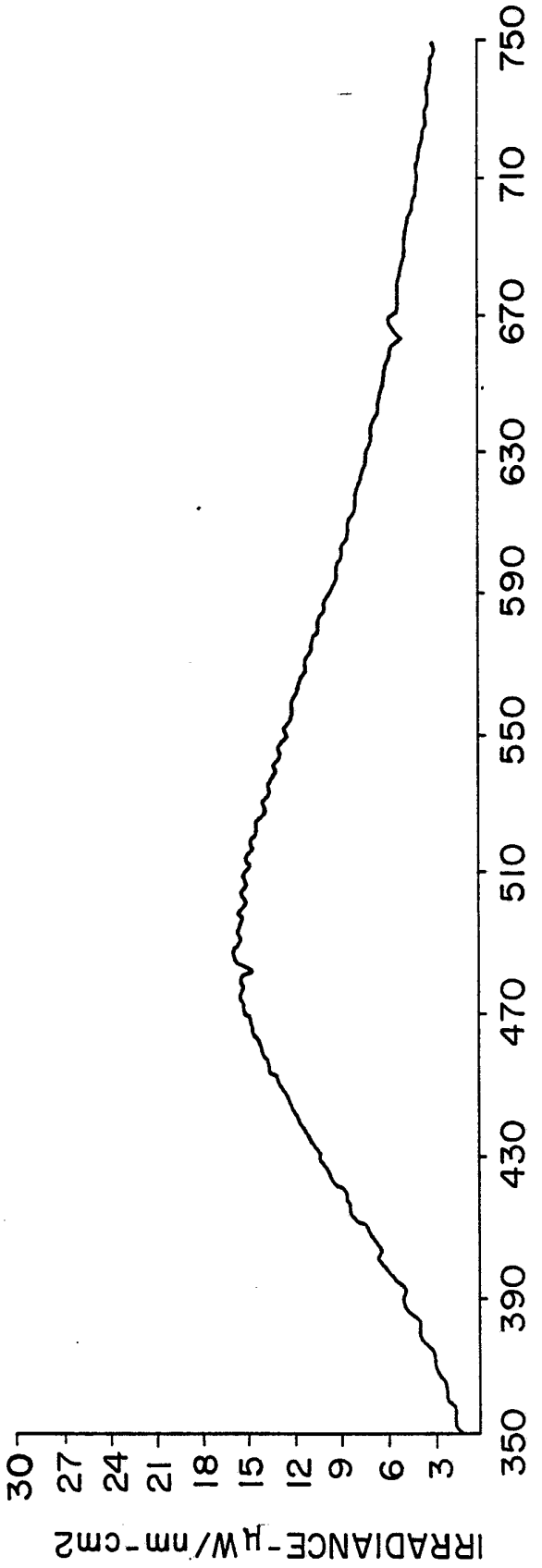
IRRADIANCE-μW/nm-cm2
30
27
24
21
18
15
12
9
6
3
350
390
430
470
510
550
590
630
670
710
750
WAVELENGTH (nm)

FIG. 14

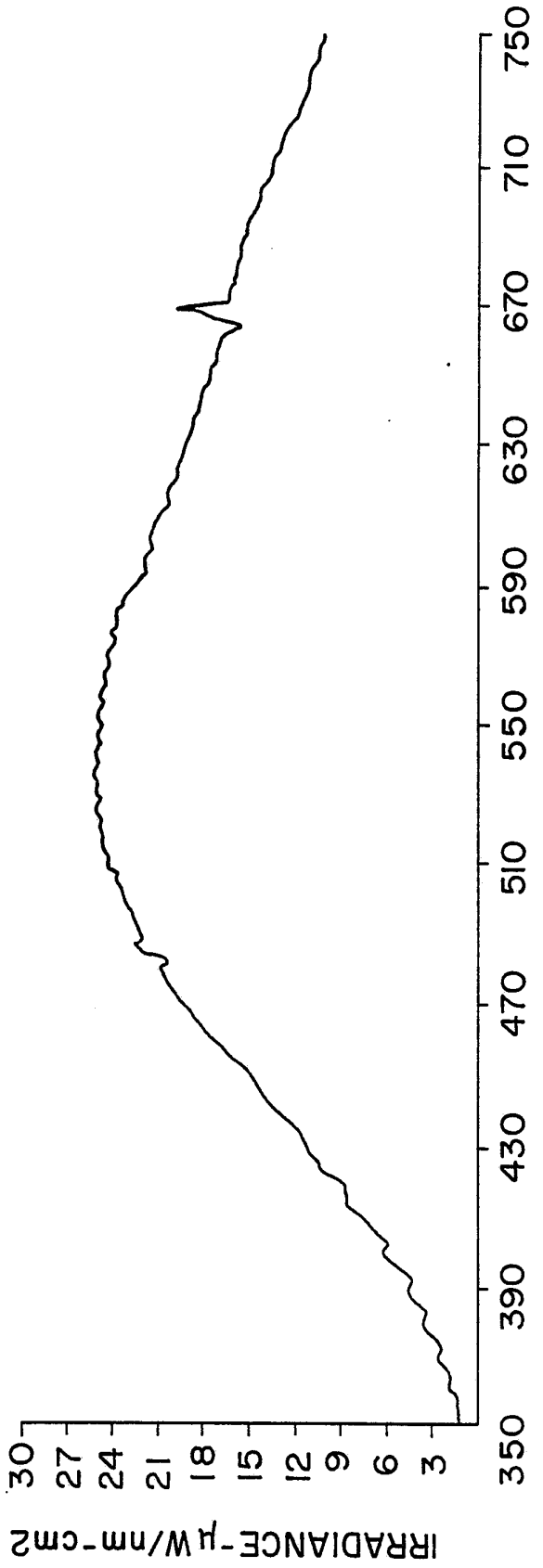
IRRADIANCE-μW/nm-cm2
30
27
24
21
18
15
12
9
6
3
350
390
430
470
510
550
590
630
670
710
750
WAVELENGTH (nm)

FIG. 15

FIG.16

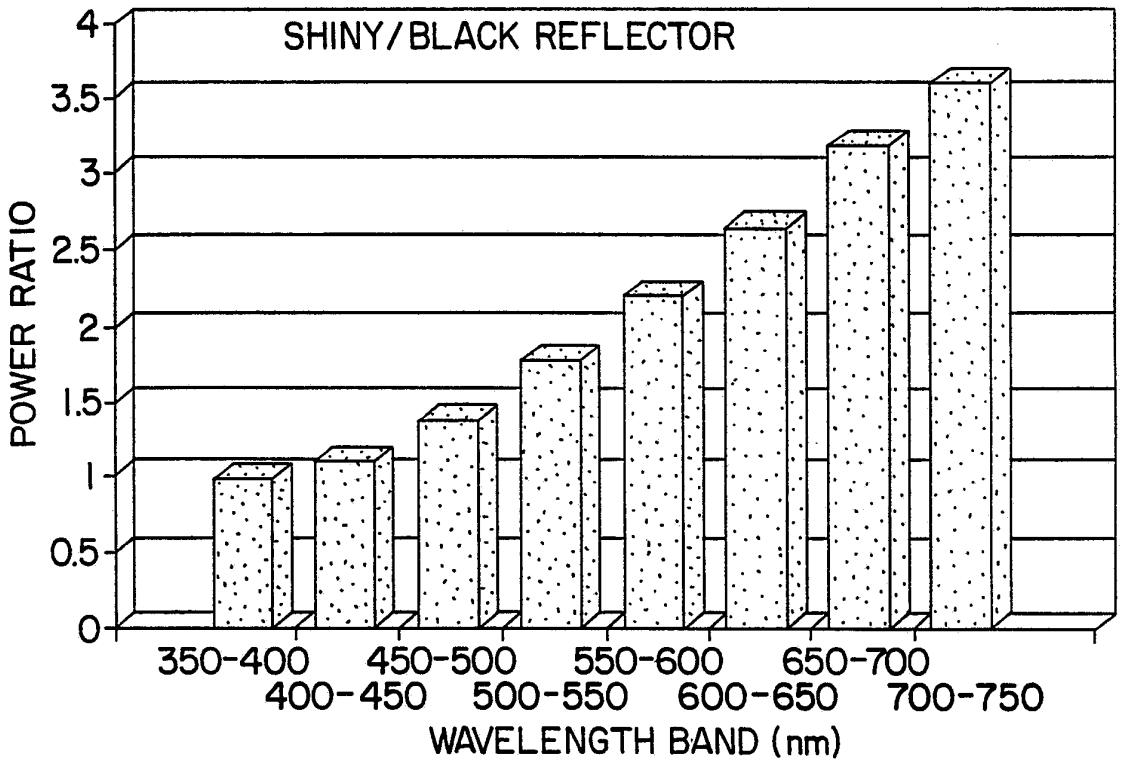
SHINY/BLACK REFLECTOR
POWER RATIO
4
3.5
3
2.5
2
1.5
1
0.5
0
350-400
400-450
450-500
500-550
550-600
600-650
650-700
700-750
WAVELENGTH BAND (nm)

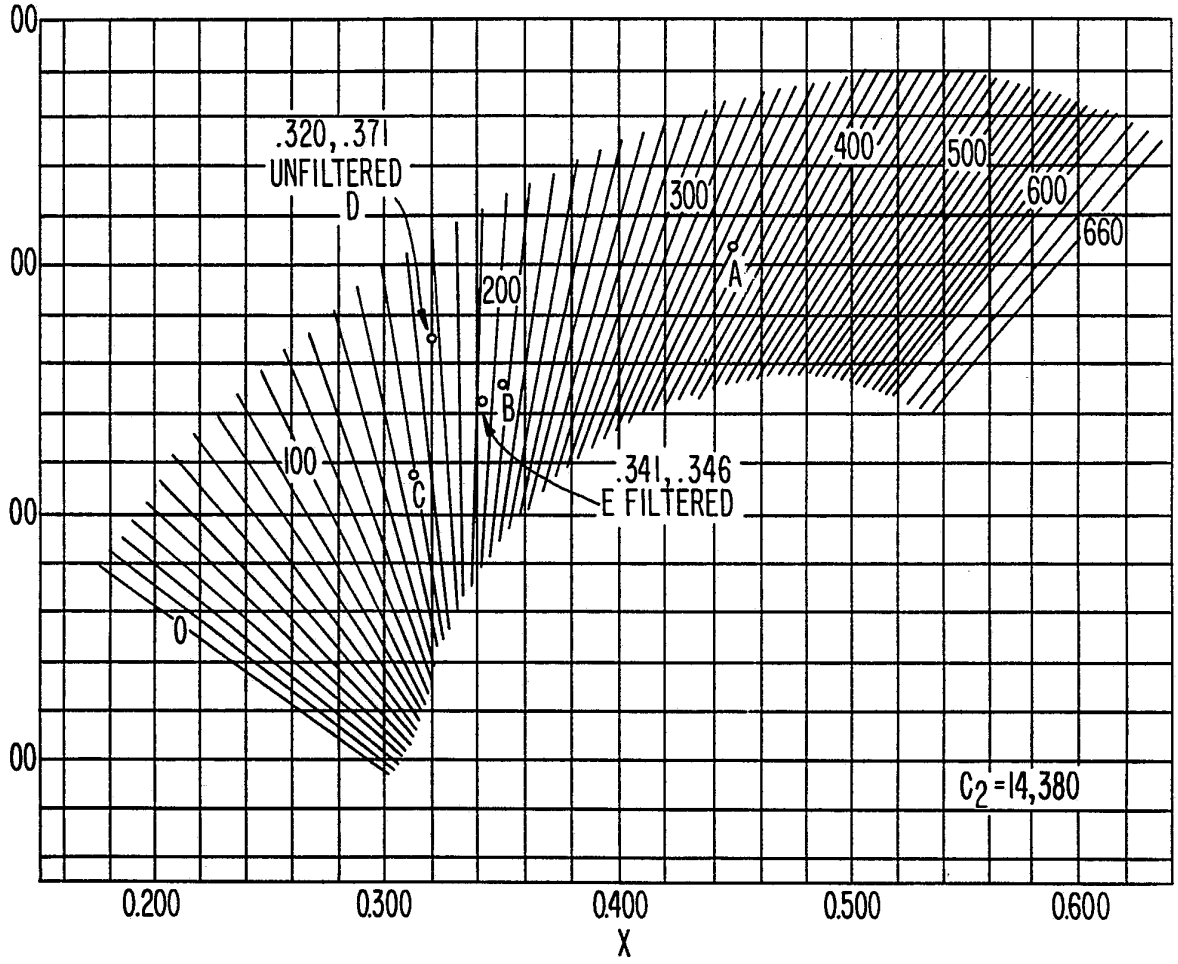
.320, .371
UNFILTERED
D
100
200
300
400
500
600
660
A
B
C
0
.341, .346
E FILTERED
C_2 = 14,380
0.200
0.300
0.400
0.500
0.600
X

FIG. 17

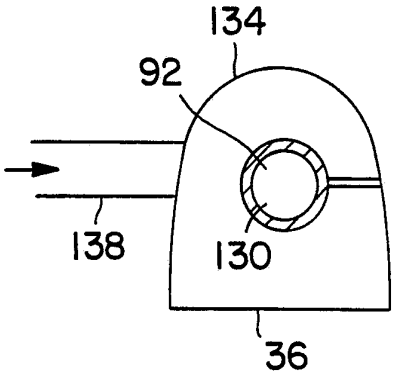
134
92
138
130
36

FIG. 18

INTERNATIONAL SEARCH REPORT

International Application No PCT/US 93/03417

I. CLASSIFICATION OF SUBJECT MATTER (if several classification symbols apply, indicate all)[6]

According to International Patent Classification (IPC) or to both National Classification and IPC

Int.Cl. 5 H01J61/38; H01J65/04

II. FIELDS SEARCHED

Minimum Documentation Searched[7]

Classification System	Classification Symbols
Int.Cl. 5	H01J

Documentation Searched other than Minimum Documentation to the Extent that such Documents are Included in the Fields Searched[8]

III. DOCUMENTS CONSIDERED TO BE RELEVANT[9]

Category °	Citation of Document,[11] with indication, where appropriate, of the relevant passages[12]	Relevant to Claim No.[13]
X	DE,A,4 011 951 (FUSION SYSTEMS CORP.) 18 October 1990 cited in the application	1,2
Y	see column 1, line 19 - line 26 see column 2, line 63 - column 3, line 44; figures	3-23,32, 74,81-86
Y	US,A,4 476 413 (GOUGH ET AL.) 9 October 1984 see column 1, line 54 - column 2, line 5	3-23,32, 74,81-86
X	PATENT ABSTRACTS OF JAPAN vol. 12, no. 158 (E-608)13 May 1988 & JP,A,62 272 448 (AGENCY OF IND SCIENCE & TECHNOL) 26 November 1987 see abstract	1

-/--

° Special categories of cited documents :[10]

"A" document defining the general state of the art which is not considered to be of particular relevance

"E" earlier document but published on or after the international filing date

"L" document which may throw doubts on priority claim(s) or which is cited to establish the publication date of another citation or other special reason (as specified)

"O" document referring to an oral disclosure, use, exhibition or other means

"P" document published prior to the international filing date but later than the priority date claimed

"T" later document published after the international filing date or priority date and not in conflict with the application but cited to understand the principle or theory underlying the invention

"X" document of particular relevance; the claimed invention cannot be considered novel or cannot be considered to involve an inventive step

"Y" document of particular relevance; the claimed invention cannot be considered to involve an inventive step when the document is combined with one or more other such documents, such combination being obvious to a person skilled in the art.

"&" document member of the same patent family

IV. CERTIFICATION

Date of the Actual Completion of the International Search	Date of Mailing of this International Search Report
29 JULY 1993	04. 08. 93
International Searching Authority	**Signature of Authorized Officer**
EUROPEAN PATENT OFFICE	SCHAUB G.G.

III. DOCUMENTS CONSIDERED TO BE RELEVANT (CONTINUED FROM THE SECOND SHEET)

Category °	Citation of Document, with indication, where appropriate, of the relevant passages	Relevant to Claim No.
P,X	WO,A,9 208 240 (FUSION SYSTEMS CORPORATION) 14 May 1992 cited in the application see page 4, line 33 - page 8, line 5 see page 11, line 19 - page 12, line 29; figures	5-86
A	US,A,4 974 227 (SAITA ET AL.) 27 November 1990 see abstract; figures	15-19

ANNEX TO THE INTERNATIONAL SEARCH REPORT ON INTERNATIONAL PATENT APPLICATION NO.

US 9303417
SA 73047

This annex lists the patent family members relating to the patent documents cited in the above-mentioned international search report.
The members are as contained in the European Patent Office EDP file on
The European Patent Office is in no way liable for these particulars which are merely given for the purpose of information. 29/07/93

Patent document cited in search report	Publication date	Patent family member(s)	Publication date
DE-A-4011951	18-10-90	US-A- 4978891	18-12-90
		JP-A- 2299199	11-12-90
US-A-4476413	09-10-84	AU-B- 526201	23-12-82
		AU-A- 4721179	29-11-79
		DE-A- 2920712	06-12-79
		GB-A,B 2023923	03-01-80
		JP-A- 55025990	25-02-80
WO-A-9208240	14-05-92	AU-A- 8925191	26-05-92
US-A-4974227	27-11-90	JP-A- 3130775	04-06-91