Feb. 14, 1967 E. B. BARNAWELL 3,303,936

ROOM DIVIDER AND THE LIKE

Filed July 23, 1964

Fig. 1.

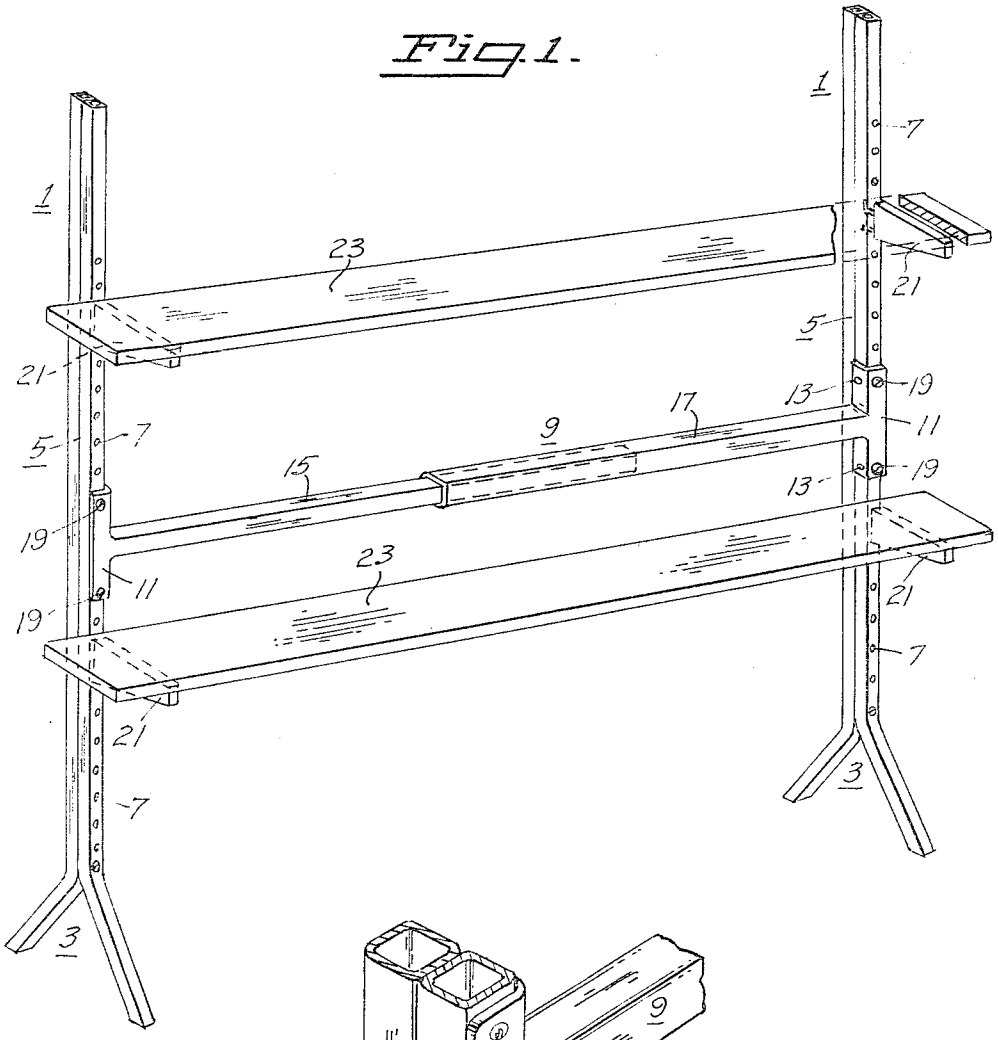

Fig. 2.

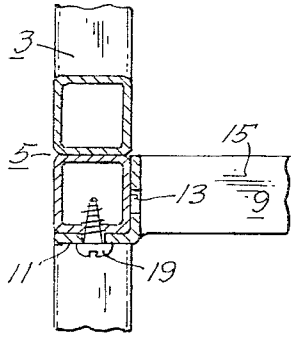

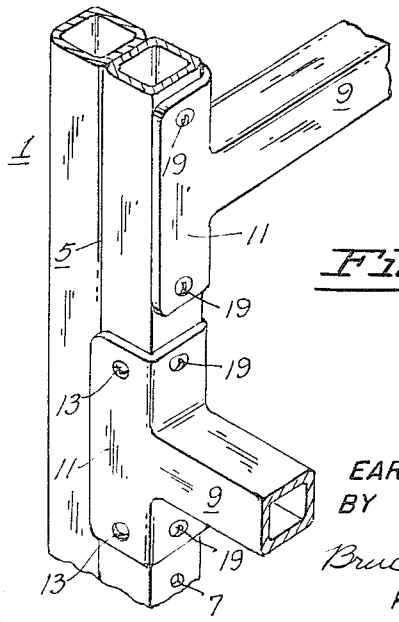

Fig. 3.

INVENTOR.
EARL B. BARNAWELL
BY
Bruce & Brooler
HIS ATTORNEYS

United States Patent Office 3,303,936 Patented Feb. 14, 1967

3,303,936

ROOM DIVIDER AND THE LIKE

Earl B. Barnawell, 1332 Ordway St., Berkeley, Calif. 94702

Filed July 23, 1964, Ser. No. 384,732
2 Claims. (Cl. 211—134)

My invention relates to room dividers or like furniture, and has for its objects:

(1) To provide a novel and improved room divider or the like;

(2) To provide a novel and improved room divider or the like capable of being readily assembled and disassembled;

(3) To provide a novel and improved room divider or the like which is adjustable as to length to satisfy differing requirements;

(4) To provide a novel and improved room divider or the like which can be made to serve a multiple purpose;

(5) To provide a novel and improved room divider or the like capable of functioning from either side as a bookcase or like piece of furniture;

(6) To provide a novel and improved room divider or the like capable of being assembled with sections at right angles to one another.

Additional objects of my invention will be brought out in the following description of the preferred embodiment of the same, taken in conjunction with the accompanying drawings wherein:

FIGURE 1 is a view in elevation of a room divider embodying features of the present invention;

FIGURE 2 is a fragmentary view of the structure of FIGURE 1, in section, to depict a detail of construction;

FIGURE 3 is a fragmentary three-dimensional view to illustrate the manner of assembling the structure to realize a right angle relationship between sections.

Referring to the drawings for details, the embodiment of the invention as illustrated in FIGURE 1 involves a pair of standards **1**, each including an inverted V-shape base **3** and a hollow upright **5** of rectangular section having a series of holes **7** along opposite surfaces thereof, in substantially the plane of the base.

Specifically, each of the standards may be formed of two like component parts of square sectioned pipe or channel, angled at the bottom to form part of the base, and then welded back to back, or otherwise secured, as by bolts or the like.

The two standards are supported vertically by a brace bar **9** terminating at each end in a fastening flange **11** which is substantially normal to the brace bar and of right angle section and provided with openings **13** in planes substantially 90 degrees to each other, to permit of fastening the brace bar at each end to a standard, in either the plane of the standard or in a plane normal thereto.

The brace bar is preferably made adjustable by forming it of a pair of telescoping sections **15**, **17** to accommodate the spacing of the standards necessary to satisfy different requirements.

The holes in the standards are preferably left unthreaded whereby fastening of the brace bar to the standards may be accomplished with the use of sheet metal screws **19**.

The many holes **7** left exposed after affixing the brace bar to the standards, are available for the selective mounting of shelf brackets **21** having anchor means for engagement in appropriate holes of the standards. Such shelf brackets may be of the type to support a horizontal shelf **23** for books, planter boxes or other ornamental objects, or the brackets may be of the type to support a sloping shelf for supporting reading matter, pictures or the like, or a sloping shelf of sufficient width to function as a desk.

Inasmuch as each standard has corresponding perforations on each side thereof, shelving may be installed on either one or both sides of the assembly.

The ability to affix the brace bar in either the plane of the standards or normal thereto, enables one to set up a divider in which sections thereof may be at right angles to other sections, such manner of assembly being depicted in FIGURE 3 of the drawings.

A divider as described, is capable of being readily assembled and disassembled, and functions not only as a room divider or the like, but also as a bookcase, desk or a support for ornamental or display objects, or combinations of the above, and thus becomes a multi-purpose device.

While I have illustrated and described my invention in its preferred form, it will be apparent that the same is subject to alteration and modification without departing from the underlying principles involved, and I accordingly do not desire to be limited in my protection to the specific details illustrated and described except as may be necessitated by the appended claims.

I claim:

1. A room divider comprising a pair of standards,
each of said standards including an inverted V-shape base and a hollow upright having a series of holes along opposite surfaces thereof in substantially the plane of said base,
an adjustable brace bar extending between said standards,
said brace bar including a pair of slidably related telescoping components, each terminating in a fastening flange substantially normal to said brace bar components and of right angled cross section, and having openings in planes substantially 90 degrees to each other to permit of fastening said brace bar to such a standard in either the plane of said pair of standards or in a plane normal thereto, and
means for fastening said brace bar to said standards.

2. A room divider comprising a pair of standards,
each of said standards including an inverted V-shape base and a hollow upright of rectangular section having a series of holes along opposite surfaces thereof in substantially the plane of said base,
an adjustable brace bar extending between said standards,
said brace bar including a pair of slidably related telescoping components, each terminating in a fastening flange substantially normal to said brace bar components and of angular cross section, and having openings in planes at a corresponding angular relationship to each other to permit of fastening said brace bar to such a standard in either the plane of such standard or in a plane in a corresponding angular relationship thereto,

means for fastening said brace bar to said standards,
and means for removably mounting a shelf on said standards to either side thereof,
said means including a shelf bracket for each of said standards, having anchor means for engagement in appropriate holes of said standards.

References Cited by the Examiner

UNITED STATES PATENTS

580,655	4/1897	Thew	211—134
1,380,570	6/1921	Tehman	211—134
1,473,817	11/1923	Gorline	189—36
3,085,693	4/1963	Shell	211—134
3,119,497	1/1964	Levy	211—178
3,127,020	3/1964	Biff	211—148

FOREIGN PATENTS

1,323,736	3/1963	France.

CLAUDE A. LE ROY, *Primary Examiner.*

K. J. WINGERT, *Assistant Examiner.*