Sept. 29, 1931. A. C. PETERSON 1,825,417

MULTIPLE CYLINDER ENGINE

Filed Sept. 23, 1926 3 Sheets-Sheet 1

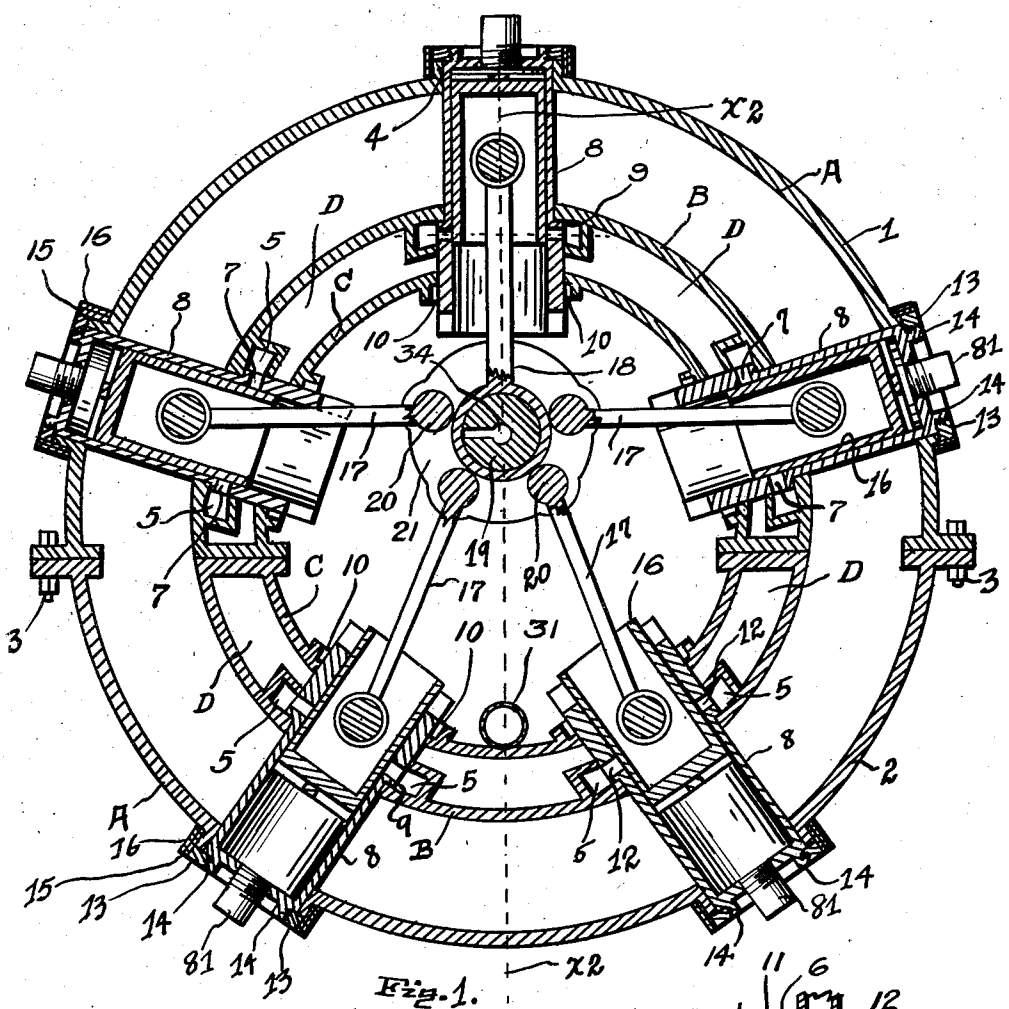

Fig. 1.

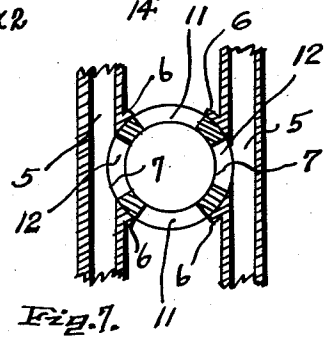

Fig. 7.

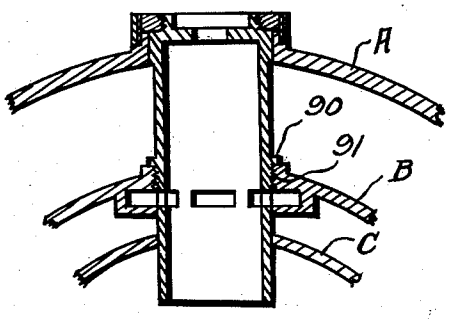

Fig. 8.

Inventor

Adolphus C. Peterson.

Sept. 29, 1931. A. C. PETERSON 1,825,417

MULTIPLE CYLINDER ENGINE

Filed Sept. 23, 1926 3 Sheets-Sheet 2

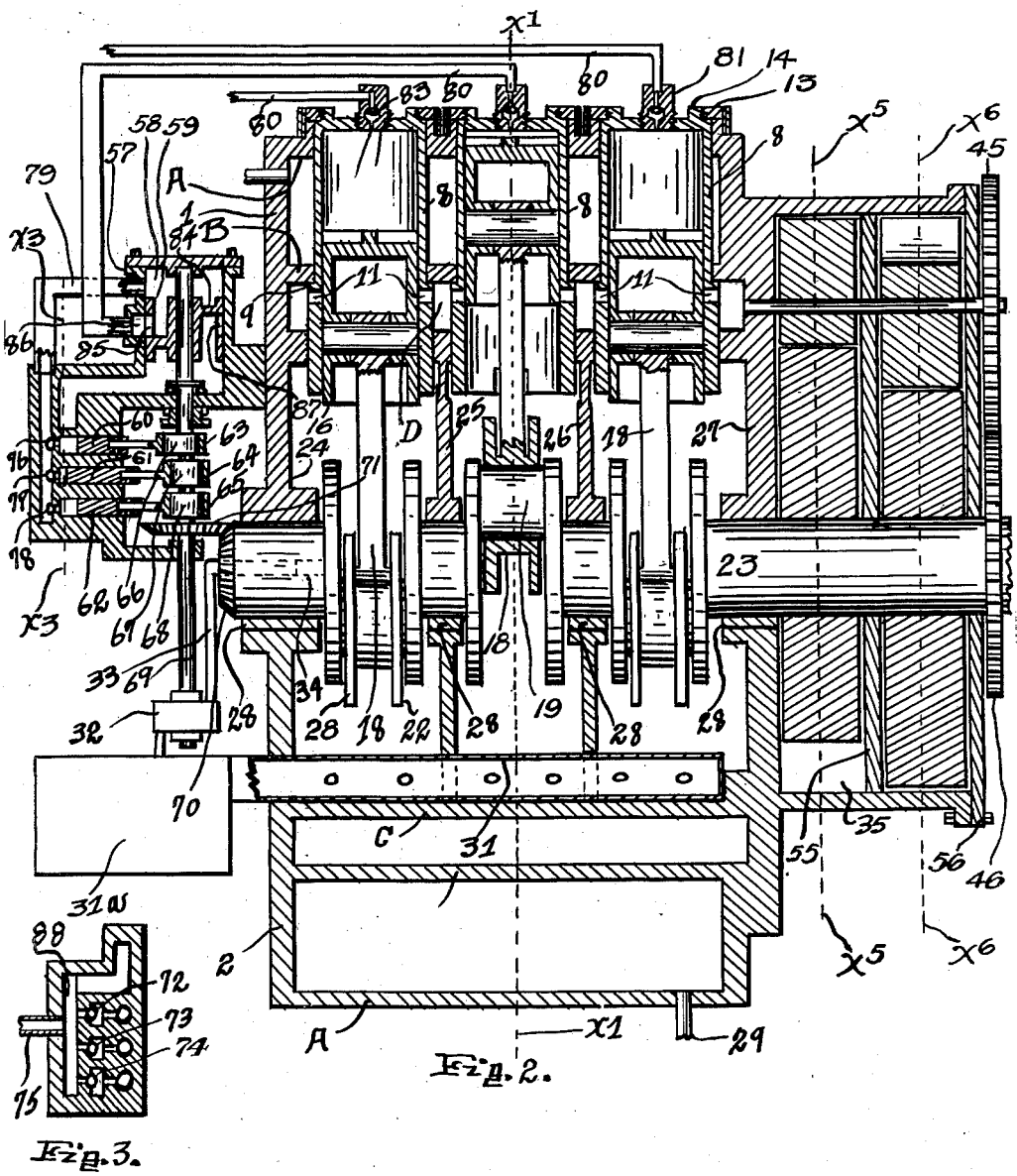

Fig. 2.

Fig. 3.



Fig. 4.

Inventor

Adolphus C. Peterson.

Sept. 29, 1931. A. C. PETERSON 1,825,417

MULTIPLE CYLINDER ENGINE

Filed Sept. 23, 1926 3 Sheets-Sheet 3

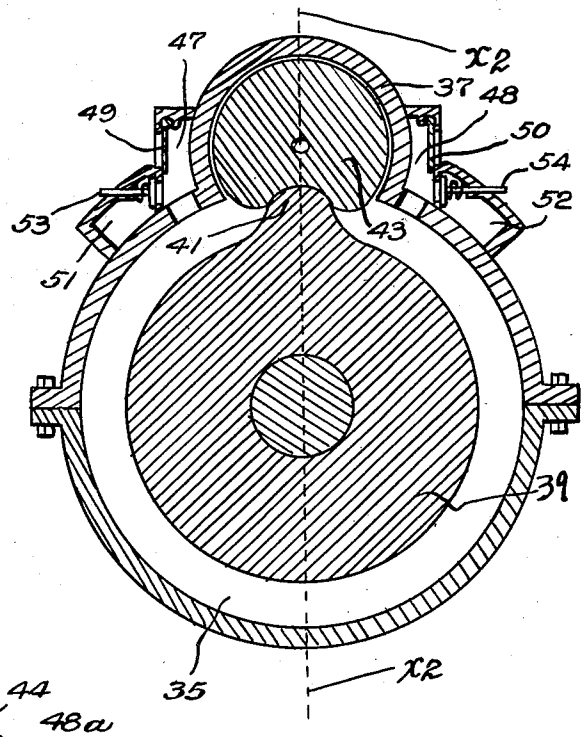

Fig. 5.

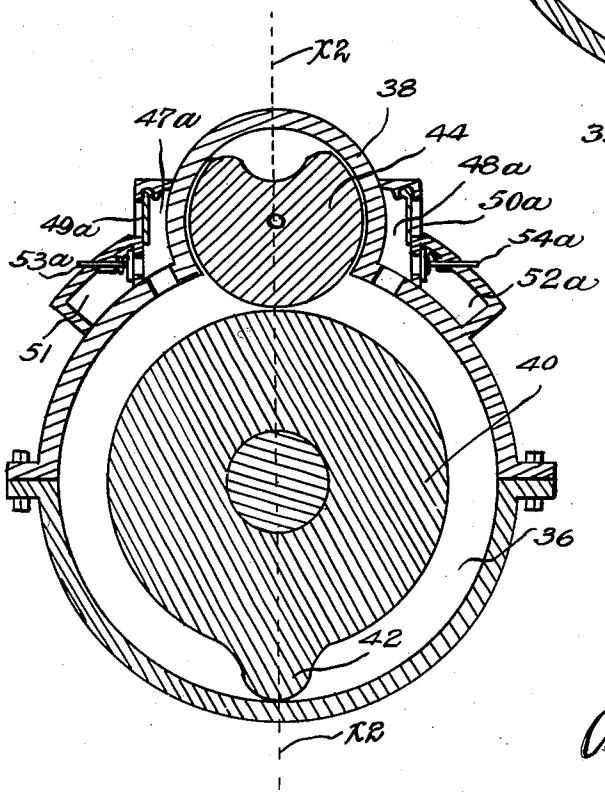

Fig. 6.

Inventor

Adolph C. Peterson

Patented Sept. 29, 1931

1,825,417

UNITED STATES PATENT OFFICE

ADOLPHE C. PETERSON, OF MINNEAPOLIS, MINNESOTA

MULTIPLE CYLINDER ENGINE

Application filed September 23, 1926. Serial No. 137,361.

My invention relates to internal combustion engines and particularly to a novel form of engine having a multiple number of cylinders wherefore it is called a multiple cylinder engine.

The principal object of my invention is to provide a form of engine construction which shall be simple, cheap, compact, light in weight in proportion to its strength and rigidity. A further principal object of my invention is to provide a form of engine which is particularly adapted to two cycle design, and which is particularly adapted to the high pressure type of design, such as the Diesel engine. An object is to provide a form of engine which particularly adapts the Diesel engine to automotive use, which is adapted to any form of fluid engine as the steam engine. A further object is to provide a novel form of fuel injection which shall be simple, effective in use, reliable, which will provide uniformity in distribution of liquid fuel in solid injection engines, and which shall be adapted to use in any type of engine as, the two cycle, four cycle, Diesel or semi-Diesel. My fuel distribution means may be used as an efficient fuel distributing means in any form of internal combustion power plant having a plurality of combustion chambers.

The principal devices and combinations of devices comprising my device are as hereinafter described and as defined in the claims. In the accompanying drawings which illustrate my invention, like characters refer to like parts throughout the several views.

Referring to the drawings;

Figure 1 is a view in vertical cross section taken at right angles to the axis of the crank shaft of the engine and on the line X1—X1 of Figure 2, and showing a section through a plane which cuts one so-called bank or radial plane of cylinders through their axes.

Figure 2 is a vertical cross section on the line X2—X2 of Figure 1, this section being on a vertical plane through the axis of the crank shaft of the engine and showing in part a section through cylinders which lie in one longitudinal plane that is through one line of cylinders in a plane parallel to the axis of the engine crank shaft.

Figure 3 is a vertical section on the line X3—X3 of Figure 2 this being through the valve chambers, inlet valves of the fuel pumps.

Figure 4 is a detail view showing the top of one of the pistons, the tops of the others being the same.

Figs. 5 and 6 are vertical cross sections on the line X5—X5 and the line X6—X6, respectively, of Figure 2 these sections being through a plane at right angles to the axis of one of the air charging rotors, it being noted that a section through the other of these rotors would be substantially the same.

Figure 7 is a cross section taken at right angles to the axis of any cylinder through its inlet ports 11 and exhaust ports 12. Figure 8 is a cross section taken through the axis of any cylinder in a plane at right angles to the axis of crank shaft.

Referring again to the drawings, the numeral 1 indicates an upper half and the numeral 2 indicates a lower half of a so-called cylinder casing which cylinder casing is made preferably of aluminum or duralamin or other light metal or alloy or may be made of cast iron or steel. This casing is preferably cast in the two parts as shown (but may be cast in one part) and has cast as an integral construction with each part—upper and lower—three walls which are substantially cylinders, outer wall A, mid-wall B and inner wall C. The three walls A, B, C, of the two parts, upper and lower, constituting substantially three cylinders when the two parts are joined together by the bolts 3, the three cylinders being so located and formed in size that the mid-wall and inner wall are within the outer wall and the inner within the outer wall, and so that (in the size of engine which would normally be used for the automobile of ordinary size) the outer wall cylinder would be say twenty inches or so in diameter, the mid-wall cylinder would be about fourteen inches in diameter, and the inner wall cylinder would be about ten or eleven inches in diameter. These dimensions would vary according to the size

of the engine, the stroke of the pistons and other variables. The inner wall may be cast or constructed separately if desired and thereafter joined to the others by welding or otherwise as seems most practicable or preferable in manufacture. But the outer two wall cylinders are preferably cast together in each of the two parts of the cylinder casing or in the one part of an integral cylinder casing if the latter is made in one part or casting. In the form shown the cylinder casing is split on a line a little below the horizontal plane of the axis of the crank shaft. There is cast with the outer wall cylinder (each part) radially outwardly extending short collars 4, for the purpose hereinafter described. There are cast with the mid-wall cylinder (each part) exhaust conduits 5, two for each longitudinal plane of cylinders. In the form of engine shown there are five cylinders in each radial plane or cross sectional plane of cylinders, and there are three radial planes, and the radial planes are so located relative to each other that the cylinders (fifteen) lie in five longitudinal planes (three in each) which longitudinal planes lie about the axis of the engine at radii about 72 degrees apart.

The exhaust conduits cast with the mid-wall cylinder are denoted 5. There are ten of them in all and they are located so that they lie in pairs longitudinally of the cylinder barrels, parallel to the axis thereof. The five longitudinal lines of cylinders are located between the five pairs of exhaust conduits 5 and opposite each cylinder these exhaust conduits have parts 6 which are of the shape of a cylinder sector so that at these parts the cylinders close the exhaust conduits except for the ports 7. The exhaust conduits 5 are so formed or located that they do not interfere with the flow of air as hereinafter described between the mid-wall cylinder and the inner wall cylinder to the air inlet ports. The exhaust conduits are so formed that each forms a continuous passage separately to the air or that each may deliver into one main exhaust conduit which delivers to the atmosphere.

The wall cylinders A, B, C, are so bored or machined that there are apertures for the cylinders of which there are fifteen in the form illustrated and each of these cylinders is denoted by the numeral 8. The cylinders are preferably forged in billets and machined or cast and machined and they have their heads formed integral as shown and they are formed of one internal diameter or bore but on their exterior sides or surface are formed in two diameters as shown, the larger on the inner end of the cylinder whereby a shoulder 9 extending around the cylinder about mid-way of the length of the cylinder is formed on each, and there is also formed on each integrally near the inner end of the cylinder on the exterior surface of the cylinder two lugs or projections 10, diametrically opposite each other, and there is formed on each cylinder on its outer end extending just slightly say one inch outwardly from the cylinder head, that is radially outwardly, a short collar 14 say about one-inch or a little less long and this latter collar has a screw thread formed thereon. Each cylinder has cut in its sides on the same transverse plane four ports, two diametrically opposite inlet ports 11 and two diametrically opposite exhaust ports 12. The cylinders are inserted from the inner end (in the construction shown) and when so inserted the shoulder 9 of each cylinder abuts outwardly against a corresponding recess as shown cut in the mid-wall cylinder B at the corresponding aperture of the cylinder whereby the cylinder may absorb all outward radial thrust by its shoulder 9 against the mid-wall cylinder B, and the two lugs 10 of each cylinder lie in corresponding small recesses cut in the inner wall C whereby the cylinder is prevented from turning about its axis: A collar or ring 13 having an internal screw thread is screwed upon the collar 14 extending from the head of each cylinder and the size of the collar or ring 13 is such that its external diameter is just the same as that of the collar 4 related to it such that these two collars of each cylinder location may have and have placed about them tightly a copper asbestos or other gasket 15 which has placed about it a steel or other band 16 which tightly grips the gasket and thereby forms a tight cover over the collars so that in case of expansion of the cylinder which is preferably formed of steel any gap or crevice between the collars will be covered by the gasket and leakage from the space between the outer and mid-walls A and B thereby prevented. When the cylinders are in place as shown the inlet ports 11 of each cylinder are exposed to the space between the mid-wall and inner walls B, C, so that any air flowing into the latter space denoted D may flow into the inlet ports when the latter are uncovered by their respective pistons. Likewise the exhaust ports 12 of each cylinder, when in place, are exposed to the ports 7 respectively, so that exhaust gas may flow from the cylinder into the two related exhaust conduits 5 when the related piston uncovers the ports 12 of the cylinder. Each cylinder has related a piston 16 with which are related connecting rods, master rods 18 for each of the three cylinders of the upper longitudinal plane of cylinders, and connecting rods 17 for each of the remaining cylinders. The master rods as shown bear on the crank pin 19 of which there are three placed about 120 degrees apart, and the connecting rods 17 at their inner ends have transverse rods 20 which are oscillably mounted in corresponding bearings in lateral flanges or collars 21, 22 of the related master rods. Thereby the cylinders of each radial plane of

cylinders operate by one master rod against one crank pin 19. Any other form of mounting or connection of the connecting rods and master rods may be used than that shown, that is, any such as is ordinarily used in the radial type of engines. The crank shaft 23 is mounted in bearings formed in each of four transverse walls 24, 25, 26, 27, which are cast integrally with the upper and lower halves 1 and 2 of the cylinder casing, preferably, but they may be separately formed and bolted on the ends of the cylinders casing and within the latter. The crank shaft is held against the upper half 1 by bearing straps of steel or cast iron or otherwise 28 which are bolted upon the lower side of the part of each transverse wall 24, 25, 26, 27 formed with the upper half 1. Thereby in assembling the cylinders related to the upper half 1 may have their pistons inserted and the crank shaft be mounted and retained by the straps 28 and the lower half 2 may then be drawn up against the upper half, gradually inserting the pistons of the lower two cylinders. Water conduits 29, 30 provide means for circulation of water as cooling medium but no means for circulatng the water is shown for the sake of simplicity. A rather large conduit 31 is placed in the space between the lower longitudinal planes of cylinders parallel to the crank shaft axis and this provides means whereby all excess lubricating oil may flow freely thereinto and thence to an oil reservoir 31*a* from which it is drawn and circulated by pump 32 (diagrammatically shown) through conduit 33 to the internal conduit 34 of the crank shaft from which the oil escapes under pressure through small conduits to the bearings. In this manner lubricating oil falling into the pistons of any of the cylinders is when thrown out by the reciprocation of the pistons caught or flows into the lower part of the crank space on inner wall C and thence into conduit 31.

There are cast integrally with each cylinder casing half 1, and 2, upper and lower parts of two charging rotor cylinders 35, 36 respectively, and there is cast integrally with the upper half 1 two rotor valve cylinders 37, 38 the latter overlapping the cylinders 35, 36 so that at the lower sides of the rotor valve cylinders they are open to the cylinders 35, 36, respectively. Rotors 39, 40 say about ten or twelve inches in diameter depending on the engine power and size are formed with or secured to rotate with the crank shaft and these rotors each have a radially projecting piston 41, 42 respectively, which latter respectively, in rotation pass into corresponding recesses formed in the rotor valves 43, 44 which latter are substantially cylindrical in form except for the said recesses. The pistons and recesses corresponding are so formed that in rotation of the crank shaft, the pistons will at each revolution pass once into the corresponding recess of the related rotor valve and the latter are revolved uniformly with the crank shaft by spur gears 45, 46. On each side of the rotor valve casing there is formed inlet valve chambers 47, 48, for each rotor cylinder and light flap valves 49, 50 permit entry of air but prevent discharge of air. Likewise on each side of the rotor valve casing there is formed discharge conduits 51, 52 into which air may flow under pressure of say two to ten pounds depending on conditions, as compressed by the rotors pistons flap valves 53, 54 preventing return flow of air. The discharge conduits 51, 52 deliver into the space D formed between the mid-wall and inner wall cylinders B, C. A partition wall 55 is placed between the rotors and rotor valves fitting tightly in the casings 1–2 in the proper location as shown. A rear cover 56 covers the rear end of the rotor cylinders and rotor valve cylinders as shown.

On the opposite end of the cylinder casings there is supported a fuel distribution casting 57 which at its upper part has a cylindrical bore 58 within which a cylindrical fuel distributing valve 59 rotates and has formed in its lower part three pump cylinders wherein reciprocate three pumps 60, 61, 62 the latter reciprocated by connecting rods 63, 64, 65 by eccentrics 66, 67, 68 on the vertically trunnioned shaft 69, the latter being rotated at the same speed as the crank shaft by mitre gears 70, 71. Inlet valves 72, 73, 74 permit the fuel pumps to draw liquid fuel from the supply conduit 75, Fig. 3, which may receive fuel from any reservoir (not shown). The fuel is pumped under high pressure say eight to twelve hundred pounds or so past non-return valves 76, 77, 78 into conduit 79 to the valve bore 58 above the fuel distributing valve 59 and thence passes as controlled by fuel distributing valve 59 into each of the nozzle conduits 80 of which there are fifteen one for each cylinder delivering to a nozzle plug 81 which has a spray injection port 82 of very small and exact size, the same in each nozzle plug and a simple check or non-return valve 83 which may be a ball valve, in each nozzle plug prevents return flow but permits delivery. The distributing valve 59 has a dividing wall 84 and a delivery port 85 of say only a few degrees 10, 15 or 20 degrees, length, which as it passes a port 86, one of fifteen related each to a nozzle conduit, connects the nozzle conduit with the upper side of valve 59 and thereby with conduit 79 so that fuel under high pressure may flow to the conduit. At all remaining periods the or each nozzle conduit is connected through port 87 of valve 59 with the under side, low pressure side, of valve 59 and thereby with fuel suction chamber 88 and conduit 75. Port 87 is say approximately 330 or 340 degrees or so in length. Suction in chamber 88 and conduit 75 are connected with the reservoir and are filled al-

ways at gravity pressure or low pressure of the fuel from the supply conduit and each nozzle conduit has high pressure only during the injection period of its cylinder 10, 15 or 20 degrees or so.

The piston heads have a cross shaped projection 89, Fig. 4, which serves to direct charging air upward and exhaust to the exhaust ports.

In the operation of my engine, the crank shaft is given the initial revolution by any commonly used means (not shown) and when so revolved or starting revolving the air compression rotors draw air from the atmosphere and compress it under say four or five or a few pounds pressure, possibly as much as eight or ten pounds, into the space D between the inner and mid-walls, B, C, and the air is therefore at all times substantially under the pressure of say four to ten pounds in the space D and whenever any piston uncovers the air inlet ports 11 in the side of the cylinder air flows therethrough and at the same time or substantially so the same cylinder exhausts through the exhaust conduits 5 to atmosphere. This charging with fresh air occurs at the inner end or bottom of the stroke of each piston on the two cycle method, and whenever any piston nears the upward or high i. e., outer-most point of its reciprocation or at that point, the valve 59 permits the fuel pumped at high pressure to flow through the related conduit or to it at the high pressure of say eight or twelve hundred pounds and since the port of the valve 59 and the nozzle conduit is large in cross area the pressure is very quickly or instantaneously raised to the maximum pumped by the fuel pumps and that maximum pressure is therefore immediately effective and the fuel is sprayed at that high pressure during substantially all of the injection period for each cylinder and as soon as the injection period is passed the other port of the valve 59 immediately permits reduction of the pressure in the nozzle conduit so that immediately there is no further injection and the non-return valve prevents return flow into the nozzle conduit and during no part of the ensuing working stroke is any fuel permitted to enter as there is no pressure except the gravity pressure or very low pressure, less than that in the cylinder at any time, and consequently there is no leakage or delayed entry of fuel during the working stroke or any part of the cycle other than the injection period in any cylinder and injection is therefore very exact as each nozzle plug has the spray port of very exact size, very finely measured or calibrated so that they are exact in size, and therefore injection of fuel is exactly similar in each cylinder. The pressure in each nozzle conduit is very quickly raised or lowered on account of the large relative size of all conduits and ports except the spray port itself and distribution is therefore very exact and positive. In order to secure this end there is provided the three fuel pumps which are contemplated to operate in such order that an even pressure of fuel is secured in the high pressure supply conduit 79. As there are fifteen succeeding discharges from the nozzles in a cycle the uniformly available pressure is in substantial continuous discharge of fuel at the high pressure, but the supply of fuel by the plurality of fuel pumps at the high pressure, is so large in quantity that it exceeds the volume of discharge through the nozzles per cycle and provides for the slight loss of fuel from each nozzle conduit which occurs when the particular nozzle conduit releases pressure to the low pressure side or supply reservoir. As the supply of fuel at high pressure is large and abundant, and the ports of entry to nozzle conduits are large, rapid increase to full pressure and rapid decrease to low pressure or no pressure in each nozzle conduit is provided according to its cycle. It is contemplated that the supply of fuel at high pressure will exceed the requirements for combustion so as to procure this object. The low pressure side is always under suction of the fuel pumps and the gravity feed is preferably no more than just necessary to cause filling and keep the fuel distribution system full at all times. The valve 59 may be modified so that the high pressure is balanced and so that there is no downward bearing on the valve; in the system shown this is taken by a ball bearing, as shown, but the valve distribution may be made so that this pressure is balanced on the valve or other means for controlling the connection of the nozzle conduits with the high pressure fuel and the low pressure supply may be provided. The barrel construction, walls A, B, C, are shown as cast together in the upper and lower halves but the walls may be separately cast or forged or stamped, and in some constructions the inner and mid-wall would preferably be cast separately and the exterior or wall A either forged or stamped separately and welded or riveted or otherwise secured to the other inner walls and bearing parts in substantially the manner shown. In some constructions air cooling may be used, this cooling air being directed into the space between exterior and mid-wall and there being then no wall C, and the cooling air being then also used to furnish the charging flow of air to the cylinder air ports. In this case the cylinders would preferably be provided with cooling fins. The method shown for water or liquid cooling is preferably used however. In the construction shown, it is contemplated that high compression is used, say six or seven hundred pounds, and this causes ignition,

but low pressure may be used and other ignition means provided. Especially in some forms the air charge may be carburetted before being introduced to space D or to the air ports of the cylinders and ignition by the common electric ignition means provided but I have shown the high compression injection type of cycle with my novel barrel and cylinder construction because the construction is particularly advantageous for such engines as it provides a multi-cylinder construction where the impulses are very much divided or smaller in proportion to output, and weight may be therefore comparatively low and such an engine may therefore hereby be provided for automotive engines particularly with not excessive weight and advantages of economy of high pressure cycles provided. The inner and mid-walls and bearings supports may be of aluminum or light alloy and the wall A made of sheet steel or stamped steel welded on so that a light and strong construction would be provided. Other forms of rotary air charging means may be used as the so-called double 8 rotary blower. For strengthening of the parts steel stay bolts or bolts passing nearly diametrically through the barrels may be used, placed between the engine cranks of the crank shaft, in addition to the bolts used on the flanges at the dividing point of the barrel halves.

While I have shown particular devices and combinations of devices in the illustration of my invention I contemplate that other devices and combinations of devices may be used in the realization of my invention without departing from the spirit and contemplation of my invention.

What I claim is:

1. In a fuel injection means, for multi-cylinder engines, means supplying fuel under sustained high pressure, conduits to each cylinder and non-return means at each cylinder in combination with a distributing means permitting communication of the high pressure fuel supply with each conduit periodically and at alternate intervals permitting release of pressure in the conduits.

2. In a fuel injection means, for multi-cylinder engines, means supplying liquid fuel under sustained high pressure, conduits to each cylinder having non-return means at the cylinder and fuel spray nozzle delivering from the conduit to the cylinder, in combination with distributing means periodically connecting each conduit with the high pressure supply of fuel and at alternate intervals permitting reduction of pressure in the conduit.

3. In a fuel injection means, for multi-cylinder engines, means supplying liquid fuel under sustained high pressure, conduits to each cylinder delivering through spray means to the cylinder and having each non-return means substantially at the cylinders, in combination with distributing means connecting each conduit with the high pressure supply of fuel periodically and permitting reduction of the pressure in the conduit at alternate intervals when the conduit is connected to the receiving end of the means supplying liquid fuel under pressure.

In witness whereof I have hereunto set my hand this 22nd day of September, A. D. 1925.

ADOLPHE C. PETERSON.