Nov. 13, 1934. G. R. LUM 1,980,214

MOUNTING FOR ELECTRIC DEVICES

Filed Sept. 18, 1930

FIG. 1

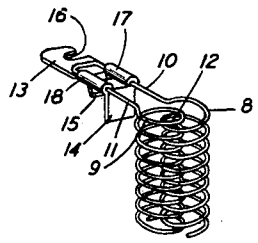

FIG. 2

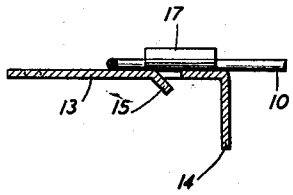

FIG. 3

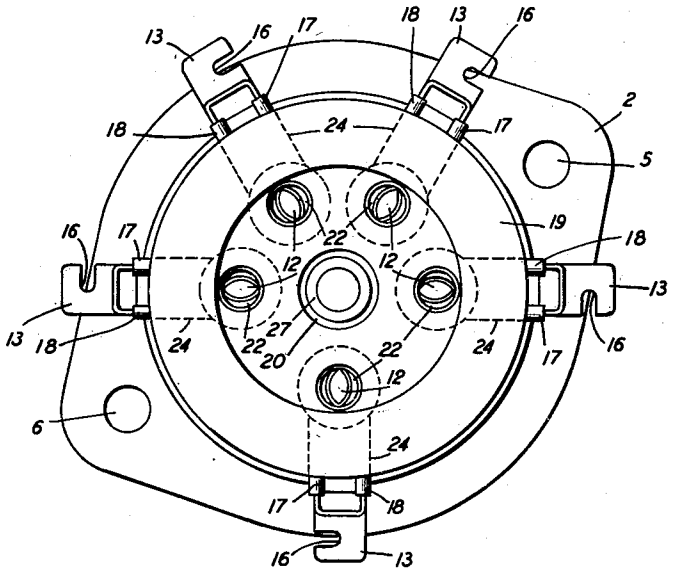

FIG. 4

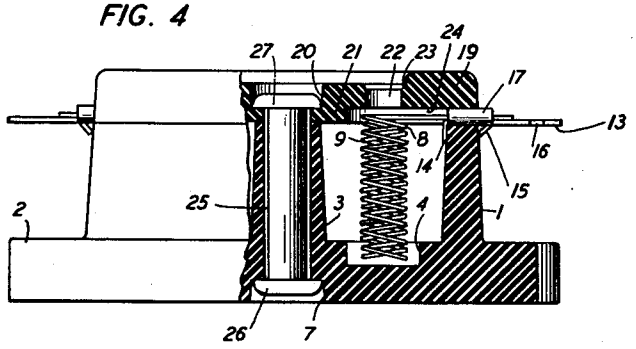

INVENTOR
G.R.LUM
BY
Walter C. Kiesel
ATTORNEY

Patented Nov. 13, 1934 1,980,214

UNITED STATES PATENT OFFICE

1,980,214

MOUNTING FOR ELECTRIC DEVICES

George R. Lum, New York, N. Y., assignor to Bell Telephone Laboratories, Incorporated, New York, N. Y., a corporation of New York

Application September 18, 1930, Serial No. 482,747

8 Claims. (Cl. 173—328)

This invention relates to mountings for electric devices and the like and more particularly to push type mountings adapted to prevent shocks and vibrations being transmitted to the devices supported therein.

In a particular type of mounting such as a vacuum tube socket of the push type adapted to receive the prongs projecting from the base of a vacuum tube, spring terminal members are provided to embrace and make contact with the prongs. In some instances, these spring terminal members are helical springs disposed within the socket in alignment with the apertures therein. These helical spring terminal members consist of intermeshed or partially intermeshed helical springs and are provided with portions extending laterally therefrom to a point outside of the socket structure to form terminals to which circuit connections may be attached. The laterally extending portions of the spring members being a continuation of the helical portions and composed of the same spring material, provide insufficient support for the helical portions and when moved, cause misalignment of the helical portions with respect to the apertures in the socket structure through which the spring terminal members of the vacuum tube are thrust. Therefore, the helical spring members are not maintained in sufficient intermeshed relationship to allow free insertion of the prongs of a vacuum tube.

An object of this invention is to strengthen the contact members in mountings so that the prongs of a discharge tube or other electrical device may be readily inserted therein without distorting the contact members.

In accordance with this invention, the intermeshed contact members are mechanically attached to terminal members which hold the helical spring members in proper intermeshed relationship to readily receive the prongs of a vacuum tube. The terminal members are provided with shoulder portions which bear against the wall of the socket and prevent displacement or bending of the contact members. The terminals are attached to the contact members by rolled ears embracing laterally extending portions of the helical springs to prevent displacement or twisting of the spring terminal members such as would result in misalignment of the springs with apertures in the socket.

The invention will be more clearly understood from the following detailed description in connection with the accompanying drawing wherein:

Fig. 1 is a perspective view of a terminal member of this invention, supporting a unitary contact in intermeshed relationship.

Fig. 2 is an enlarged side view partly in section of a terminal member holding a portion of a spring contact member.

Fig. 3 is a plan view of a mounting for electrical devices equipped with terminal members of this invention, and

Fig. 4 is a side view in elevation, partly in section of the mounting of Fig. 3.

Referring to the drawing, the mounting for electrical devices comprises a cup-shaped member 1 of molded insulating material, having a flanged base portion 2, a longitudinally bored central pillar 3 extending upward from the bottom of the cup and a plurality of circular recesses 4 in the bottom of the cup portion disposed radially about the central pillar 3. The flanged base portion 2 is provided with apertures 5 and 6 to receive screws for securing the mounting to a support. A recess 7 is provided in the under surface of the cup-shaped member 1 around the bore of the central pillar 3.

Longitudinally disposed within the cup-shaped member 1, in alignment with and extending into each of the recesses 4 in the bottom of the cup are intermeshed or partially intermeshed helical spring contact members 8 and 9 joined together by laterally extending portions 10 and 11 respectively as shown in Fig. 1. These helical spring contact members are sufficiently intermeshed to cooperatively form an elliptical opening between their helices as shown at 12 to receive the prongs of a vacuum tube. The prong of the tube when forced downward through the elliptical opening 12 displaces the intermeshed helices of the springs sufficient for its accommodation. The springs grasp the prong terminal of the tube and form electrical connection therewith along the major part of the length of the prong.

A rigid terminal member 13 is provided for the intermeshed helical spring members 8 and 9 to serve as an exterior terminal. The terminal 13 comprises a metallic punching or tab having a bent end portion 14, an intermediately located and downwardly thrust spur 15, a notched free end portion 16 to which may be attached wires of a circuit, and a pair of rolled ears 17 and 18 which grasp and are preferably soldered to the laterally extending portions 10 and 11 respectively of the intermeshed helical spring members 8 and 9.

The intermeshed helical spring members 8 and 9 may be formed of a single length of wire as shown in Fig. 1 or of two separate lengths, so

long as the laterally extending portions 10 and 11 are held in definite spaced relationship by the terminal punching 13 to maintain the helical portions 8 and 9 sufficiently intermeshed to form the elliptical opening 12 to receive a prong of a vacuum tube.

Across the top of the cup-shaped member 1 is a disc 19 of insulating material provided with a recess 20 in the center and an apertured central embossed portion 21 the under surface of which rests upon the top of the pillar 3 of the cup member 1. Within the disc 19 and disposed radially about the centrally located apertured embossed portion 21 are a plurality of apertures 22 countersunk on the upper face of the disc 19 at 23 and shown in Fig. 3 as being five in number for the accommodation of a 5-pronged equipotential tube. There may, however, be only four of these apertures or any number sufficient to accommodate the prongs of the tube with which the mounting is to be employed.

A plurality of grooves 24 are formed on the under surface of the disc 19 and extend radially from the apertures 22 to the outer rim of the disc 19, as shown in dotted line in Fig. 3, to form a recess for the inner portions of the terminal members 13 including the rolled ears 17 and 18. The disc 19 is secured to the cup-shaped member 1 by an eyelet 25 which passes through the bore of the central pillar 3 and extends at one end through the flanged base portion 2 into the recess 7 where it is spun over as shown at 26. The other end of the elongated eyelet 25 extends through the central embossed portion 21 of the disc 19 and into the recess 20, where it is spun over as shown at 27.

The terminal member 13 is attached to the helical contacts 8 and 9 by rolling the ears 17 and 18, around the laterally extending portions 10 and 11 respectively, to form a rigid exterior connection. Furthermore, the rolled ears 17 and 18 of the terminal members 13, maintain the helical spring contact members 8 and 9 in sufficient intermeshed relationship at all times to insure the proper size of the elliptical openings 12 to allow insertion of the prongs of a vacuum tube without distorting the helices. The terminal members 13 are securely clamped between the disc 19 and the rim of the cup-shaped member 1 by this assembly and held thereby against displacement longitudinally of the cup-shaped member 1. The grooves 24 into which the terminal members 13 are set in the under surface of the disc 19 prevent circumferential movement of the terminal members 13 and the turned down end portions 14 and downwardly thrust spurs 15 of the terminal members 13 engaging the inner and outer wall surfaces respectively of the cup-shaped member 1, prevent any inward or outward thrust movements of the terminal members 13 across the rim of the cup-shaped member 1. The turned down end portions 14 and downwardly thrust spur members 15 together with the rolled ears 17 and 18 of the terminal members 13 also prevent such bending or twisting of the terminal members 13 as would cause misalignment of the intermeshed helical spring terminal members 8 and 9 with the apertures 22 in the disc 19.

While the invention discloses a particular form of rigid terminal for the spring contacts in the mounting it is, of course, understood that various modifications may be made in the structure without departing from the scope of the invention as defined in the appended claims.

What is claimed is:

1. A mounting for electrical devices comprising an insulating base, cooperating spring contacts within said base each having spaced parallel extending portions, and a metallic terminal mechanically secured to said extending portions and holding said portions in spaced relation, said terminal having gripping means engaging said base to prevent displacement of said spring contacts.

2. In a mounting for electrical devices, intermeshed helical spring members forming an elliptical opening to receive a prong of the device, a terminal attached to and extending laterally from the spring members and holding said spring members in intermeshed relationship, said terminal having integral means embracing said spring members.

3. A mounting for electrical devices comprising a base member, an apertured top member affixed to said base member, intermeshed spring members longitudinally disposed within said base member in alignment with the apertures in said top member, and a terminal punching attached to and extending laterally from said spring members exterior to said base member and holding said spring members in intermeshed relationship.

4. A mounting for electrical devices comprising an insulating base member, an apertured insulating top plate member, intermeshed helical spring members longitudinally disposed within the mounting having laterally extended portions, and tab terminal members attached to and extending laterally from said spring members, said tab terminal members having rolled ears attached to the laterally extending portions of said spring members and holding said spring members in intermeshed relationship.

5. A mounting for electrical devices comprising an insulating cup-shaped base member, an apertured insulating disc secured across the mouth portion of said base member, intermeshed helical spring members longitudinally disposed within said base member having laterally extending portions, tab terminal members attached to the laterally extending portions of said spring members and extending beyond the rim of said base, and gripping means on said terminal members engaging the rim of said base member.

6. In a mounting for electrical devices comprising an insulating cup-shaped base member, an apertured plate member of insulating material having grooves in its under surface, intermeshed helical spring members longitudinally supported within the cup-shaped base member in alignment with apertures in said plate member, tab terminal members attached to and extending laterally of said intermeshed spring members and forming outside terminal members therefor, said tab terminal members extending across the rim of the cup and located within said grooves in said apertured plate member, and means engaging said plate member and cup-shaped member to securely clamp said terminal members therebetween.

7. A mounting for electrical devices comprising a cup-shaped insulating base member, an apertured insulating cover plate member therefor, means to secure the cover plate member to the insulating base member, intermeshed helical spring members longitudinally supported within the cup in alignment with apertures in said cover plate member to receive the prongs of a vacuum tube, tab terminal members attached to and extending laterally of said intermeshed helical spring members and serving as outside terminals therefor, said tab terminal members rest-

ing on the rim of said cup-shaped member and held by the outer rim of said cover plate member, and means on said terminal members engaging the inner and outer wall surfaces of the rim of said cup-shaped member to prevent radial displacement of said terminal member.

8. A mounting for electrical devices comprising an insulating cup-shaped base member having indentations in the bottom thereof, a pillar extending upward from the bottom of said cup-shaped member, an apertured cover plate, means to secure said cover plate to said pillar, a plurality of intermeshed helical spring members supported within said cup-shaped member and longitudinally aligned with the indentations in the bottom thereof and the apertures in said cover plate, tab terminals secured to said intermeshed spring members and extending laterally therefrom to the outside of said cup-shaped member, said tab terminal members having rolled ears embracing laterally extending portions of said springs, and angularly disposed portions on said tab terminals engaging said cup-shaped base member to prevent displacement of said tab terminals.

GEORGE R. LUM.