(12) INTERNATIONAL APPLICATION PUBLISHED UNDER THE PATENT COOPERATION TREATY (PCT)

(19) World Intellectual Property Organization
International Bureau

(43) International Publication Date
14 June 2012 (14.06.2012)

WIPO | PCT

(10) International Publication Number
WO 2012/078108 A1

(51) International Patent Classification:
A01B 61/04 (2006.01) *A01C 5/06* (2006.01)
F16F 1/54 (2006.01)

(21) International Application Number:
PCT/SE2011/051499

(22) International Filing Date:
9 December 2011 (09.12.2011)

(25) Filing Language: English

(26) Publication Language: English

(30) Priority Data:
1051306-7 10 December 2010 (10.12.2010) SE

(71) Applicant *(for all designated States except US)*: **VÄDERSTAD-VERKEN AB** [SE/SE]; P.O. Box 85, S-590 21 Väderstad (SE).

(72) Inventor; and

(75) Inventor/Applicant *(for US only)*: **SANDBERG, Bengt** [SE/SE]; Frackstad Berg, S-59048 Vikingstad (SE).

(74) Agent: **RWL PATENTS AB**; c/o NellPat, P.O. Box 138, S-683 23 Hagfors (SE).

(81) Designated States *(unless otherwise indicated, for every kind of national protection available)*: AE, AG, AL, AM, AO, AT, AU, AZ, BA, BB, BG, BH, BR, BW, BY, BZ, CA, CH, CL, CN, CO, CR, CU, CZ, DE, DK, DM, DO, DZ, EC, EE, EG, ES, FI, GB, GD, GE, GH, GM, GT, HN, HR, HU, ID, IL, IN, IS, JP, KE, KG, KM, KN, KP, KR, KZ, LA, LC, LK, LR, LS, LT, LU, LY, MA, MD, ME, MG, MK, MN, MW, MX, MY, MZ, NA, NG, NI, NO, NZ, OM, PE, PG, PH, PL, PT, QA, RO, RS, RU, RW, SC, SD, SE, SG, SK, SL, SM, ST, SV, SY, TH, TJ, TM, TN, TR, TT, TZ, UA, UG, US, UZ, VC, VN, ZA, ZM, ZW.

(84) Designated States *(unless otherwise indicated, for every kind of regional protection available)*: ARIPO (BW, GH, GM, KE, LR, LS, MW, MZ, NA, RW, SD, SL, SZ, TZ, UG, ZM, ZW), Eurasian (AM, AZ, BY, KG, KZ, MD, RU, TJ, TM), European (AL, AT, BE, BG, CH, CY, CZ, DE, DK, EE, ES, FI, FR, GB, GR, HR, HU, IE, IS, IT, LT, LU, LV, MC, MK, MT, NL, NO, PL, PT, RO, RS, SE, SI, SK, SM, TR), OAPI (BF, BJ, CF, CG, CI, CM, GA, GN, GQ, GW, ML, MR, NE, SN, TD, TG).

Published:

— *with international search report (Art. 21(3))*

— *with amended claims (Art. 19(1))*

(54) Title: DEVICE AT A BEARINGS DEVICE FOR AN AGRICULTURAL IMPLEMENT

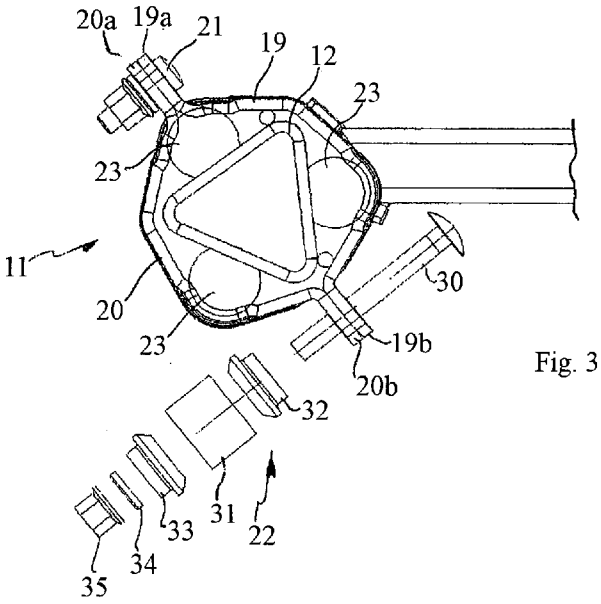

Fig. 3

(57) Abstract: The invention refers to a device at an agricultural implement (1), which device comprises one of at least two bearings halves (19, 20) containing bearings between at least one implement (5, 37) and the frame (2) of the agricultural implement, which is comprised of at least one beam (12) extending through the bearings, a bearings carrying 5 arm (14, 39), wherein at least two elastic, elongated, rebounding elements, preferably of rubber, are arranged between said bearings halves and said beam and wherein at least first and second restraining means (22 and 21) are arranged to hold together the bearings halves, besides which at least the first of said restraining means is comprised of at least one rebounding apparatus (22), which is adapted to elastically press together one side of 10 the bearings halves (19, 20) and is assembled at these with the aim of on additional tensioning of the bearings elastically pliably moving apart one side of the bearings halves. 15 Fig. 3

WO 2012/078108 A1

DEVICE AT A BEARINGS DEVICE FOR AN AGRICULTURAL IMPLEMENT

The present invention refers to a device at a bearings device for an agricultural implement according to the ingress to Claim 1.

TECHNICAL AREA

Agricultural implements have had rebounding working members for a very long time. For the past few decades it has become increasingly common to build various forms of rubber cushioning into agricultural implements. See for example WO 88/04133. This is often a type of rubber cushioning that has a quadratic inner part and a quadratic outer part. These parts are in the normal case rotated 45 degrees to each other. In the four corner spaces that are formed between the inner part and the outer part, four rubber rods are fitted. Rubber cushioning is very appropriate in agricultural implements since a rubber cushioning is both a joint, a spring and a shock absorber. This machine element has a very long life even in a difficult working environment.

In a conventional seed drill it is appropriate to provide the coulters with rubber cushionings in order to achieve a good pre-tension and still have room for movement to take up irregularities of the soil. A problem is that the working members are unfixed, in this case the coulters, since these are lifted out of the soil and the machine is transported on roads that are often of low standard. When the rubber cushionings adopt a position near the neutral position the position of the coulters is not clearly defined and they are positioned differently, which does not look good aesthetically. They also strike in an unsatisfactory way during transport. Certain manufacturers have solved this problem through beams that act as a stop capturing the coulters, which with a certain pre-tension are pressed against these beams. These beams give good control and the coulters are held in line and steady, but the solution is not practical and involves a considerable cost. This is particularly troublesome when the cushionings have to be made short in the axial direction due to lack of space. If the rubber cushioning is short it becomes extra unstable for the coulters that are located on the outer sections of the machine, which for transport are folded up approx. 90 degrees.

Another problem with bearings with cushioning elements of rubber is that the rebound becomes dulled after certain compression, which is not desirable. In the transport position the coulter aggregate risks striking against the bearings, and in the working it risks damage through the limited range of movement on for example striking an earthbound impediment.

SE 530 322 shows and describes coulter implements that are assembled on C-shaped, rebounding tines. These allow greater movement in the vertical direction, but become non-rigid in the vertical direction and in both the transport position and the working position can swing forward and backward in the lateral direction, despite that as in SE 530 322 a cross-beam is arranged in order to give better stability. A rubber cushioning according to the above is a better solution in this regard, but gives the disadvantage of dulled rebound, as described above.

A similar problem is that which occurs with various forms of working member intended to cultivate the soil under the surface, for example cultivator tines. These usually have to have a strongly pre-tensioned but rebounding construction in order to flex aside when they encounters fixed impediments such as stones, tree roots or other objects in the soil. The rebounding construction usually means that a coil spring or hydraulic cylinder is built into the fastening of the working member. This rebounding construction is usually called 'stone release' and has to have such a high pre-tension that it does not spring back for the normal soil resistance. A problem is that the stone release can cause damage to the agricultural implement.

A similar bearings device is known through Swedish patent application no. 0950454-9. With this bearings device the spring action is restricted through an arrangement of stops, which are fashioned in one piece with the bearings halves.

AIM OF THE INVENTION

The aim of the present invention is to achieve a device at a bearings device for an agricultural implement of the initially described type, which device solves the above-mentioned problems and in addition provides an additional rebound action.

SUMMARY OF THE INVENTION

The aim is achieved with a device, which has been given the characterising features in Claim 1.

Preferred embodiments of the device according to the invention have been given the characteristics presented in the sub-claims.

In order to allow the coulters to lift so much that they can pass over stones it is advantageous to use a rubber cushioning with a triangular shape since this can be

rotated to a maximum of approx. 40 - 45 degrees. With a square rubber cushioning the maximum rebound lies at approx. 30 degrees. A cushioning of triangular shape functions excellently in this application. The reason why it functions so well is that a cushioning built in triangular form has a much longer hysteresis than a cushioning built in square form, i.e. more of the force required to rotate the cushioning comes back on the rebound with a triangular embodiment than with an embodiment with square cross-section. It also has to be so durable and resistant to wear that it is not worn to any appreciable degree on driving in stone-bound areas, which makes it extra costly. This 'stone release' usually needs to spring out the working member by in the region of 25-30 degrees. A common pre-tensioning force can be 200 - 400 kp measured at the lowermost part of the working member, i.e. its point.

The problem is solved for soil cultivating working members through utilising the technique of a rubber cushioning that can be pre-tensioned to such a degree that effective 'stone release' is achieved, which is quiet and resistant to wear. This can also be made at a very competitive cost.

According to the present patent application an additional rebound action is achieved at 'stone release' through at least one side of the bearings halves of the bearings device being pliably moved from the other a predetermined distance against the force of an additional rebounding apparatus.

DRAWINGS SUMMARY

The invention is described more closely in the following with reference to the attached drawings, which show a preferred embodiment applied on different implements.

Fig. 1 shows a perspective view of an agricultural implement with bearings devices, which each comprise a device according to the invention with an additional rebounding apparatus.

Fig. 2 shows an partial side view of a part of the agricultural implement in Fig. 1 with the device according to the invention.

Fig. 3 shows an partial side view on a larger scale of the bearings device with the device according to the invention shown in exploded view.

Fig. 4 shows an partial side view on a larger scale of the bearings device with the device according to the invention in tensioned state.

Fig. 5 shows a partial perspective view of the bearings device with the device according to the invention in untensioned state.

Fig. 6 shows a tension diagram for the bearings device assembled on a coulter aggregate, wherein is shown the tension with and without the device according to the invention assembled on the bearings device.

Fig. 7 shows a side view of another agricultural implement comprising a bearings device with the device according to the invention in tensioned state.

Fig. 8 shows a perspective view of the agricultural implement in Fig. 7 with a bearing device displaying two devices according to the invention in untensioned state assembled on one side of the bearings device.

DETAILED DESCRIPTION OF A PREFERRED EMBODIMENT

Similar parts/details in the embodiments described and illustrated in the drawings have been given the same reference number.

Fig. 1 shows an agricultural implement 1, where one side section and the centre section are disposed in a working position. The agricultural implement 1 has a frame 2, which rests on a number of wheels 3 journalled in bearings thereon, a container 4 for seed, fertiliser or other spreadable material and a number of coulters 5, which via not shown, flexible hoses are connected to a distributor 6, which via a riser pipe 7 is connected to the container 4.

The agricultural implement 1 has coulters 5 assembled in three sections 8, 9 and 10. Each coulter 5 in this embodiment is comprised of a so-called V-disc aggregate with discs positioned in a V-shape, which create a furrow in the soil, wherein the seeds are conducted to the furrows in a seed pipe 24, which is assembled between the coulter discs. To each pipe 24 a not shown flexible hose is connected from the distributor 6 in Fig. 1. The side sections 8 and 10 are rotatable between a vertical transport position, as displayed by side section 10, and a horizontal working position, as displayed by side section 8. The centre section 9 can be lifted vertically between a position in engagement with the soil and one out of engagement. This movement can be used either during transport when the side sections are folded up or for example on headlands when the side sections 8 and 10 are folded out.

Fig. 2 shows a coulter entity 13 with coulter 5 and press wheel 17 in working position. The coulter entity 13 comprises a slightly curved arm 14, fastened at the arm 14 a bracket 16, at which the coulter 5 is journalled in bearings, and the press wheel 17 journalled in bearings at the end of the arm with a scraper device 18 for cleaning the rolling surface of the wheel 17. At the other end of the arm journalled in bearings at the

bearings device 11 a first bearings half 19 of a bearings case is fastened, preferably by welding. The bearings case has a second bearings half 20. The flanges 19a, b and 20a, b of the bearings halves 19, 20 respectively are bolted together on the one side by means of a nut and bolt fastening 21 and on the other side by means of a device 22 according to the invention (see in particular Fig. 3). Between the bearings halves 19, 20 and the beam 12 positioned centrally between these, elastic, circular cylinder shaped rods 23, preferably of rubber, are arranged (see in particular Figs. 3 and 4). At each beam 12 at least one movement restricting arm 12a is assembled (indicated in Fig. 1). Not shown brackets on the beam 12 are fastened at one end of hydraulic aggregate 27, the other ends of which are journalled in bearings at the frame of the implement 1. The end of the movement restricting arm 12a facing away from the beam 12 is journalled in bearings at a not shown L-shaped arm, the other end of which is journalled in bearings at the frame 2 of the agricultural implement 1. The movement restricting arm 12a and the hydraulic aggregate 27 regulate the working depth and the sowing depth, as shown in SE 0602228-9.

Figs. 3 and 4 show on a larger scale a first embodiment of a bearings device 11 or rubber cushioning for restraining a predetermined number of coulters 5 at a beam 12 positioned perpendicular with respect to the driving direction of the agricultural implement 1. Fig. 5 shows a perspective view of a bearings device 11 with a device 22 according to the invention. A cross-wise beam 12 is arranged for each section 8, 9 and 10. The device 22 according to the invention that comprises part of the bearings device 11 is described in more detail below.

The device 22 according to the invention is clearly shown by the exploded diagram in Fig. 3 and comprises a bolt 30, which is adapted to be introduced through not shown holes in the flanges 19b and 20b at the bearings halves 19 and 20, a hollow, elastically pliable rebounding cylinder 31, a washer 34 and a stop nut 35. The bolt 30 is accordingly introduced through the holes in the flanges 19a and b, the first end ring 32, the rebounding cylinder 31, the second end ring 33, the washer 34 and is finally screwed fast in the stop nut 35. The hollow, elastically pliable rebounding cylinder 31 can be made from a, preferably massive, elastic material or designed as a coil spring or similar rebounding element. The end rings 32 and 33 have on their sides facing the rebounding cylinder 31 convex portions that abut against the ends of the rebounding cylinder 31. In the resting position the bolt is tightened such that the rebounding cylinder 31 is completely untensioned or slightly pre-tensioned, see Figs. 5 - 7.

When the coulter 5 encounters a stone or some other hard object in the soil the bearings device 11 is influenced so that the elastic rods 23 are deformed somewhat up to the maximum rotation position between the beam 12 and the arm 14. If the coulter 5 is still under stress from the hard object an additional rebound action can be achieved through the rebounding cylinder 31 being compressed so that the flanges 19b and 20b move apart a predetermined maximum distance depending on the design and pre-tensioning of the rebounding cylinder 31. Thereby is provided an additional rebound action through simultaneously the elastic rods 23 inside the bearings halves being allowed further deformation and thereby an additional rotation between the beam 12 and the arm 14 can be achieved. When the coulter 5 releases the hard object in the soil the elastic elements, i.e. the rebounding cylinder 31 and the elastic rods 23, return to their original position and the coulter 5 returns to its original predetermined depth position in the soil.

The bolt fastening 21 can advantageously comprise a not shown elastic element, such as a spring washer or similar, in order to allow a moving apart of the sides of the flanges 19a and 20a facing the beam 12 on the influence according to the above of the device 22 according to the invention. Alternatively or as a complement, the bearings halves 19, 20 can be so designed and/or have such a thickness that they allow a predetermined rebound action.

Fig. 6 shows a diagram which demonstrates that the coulter pressure is unloaded to an essential degree with a device according to the invention (a so-called stone release).

Figs. 7 and 8 show from the side and in perspective a bearings device 36 with two bearings halves 37, 38 with double bolt fastenings 21 and double devices 22 according to the invention, where the one bearings half is assembled on an arm 39, which carries a soil cultivating disc 40. At this embodiment the beam 41 has a quadratic cross-section and four elastic rods 42 are arranged between the bearings halves 37, 38 and the beam 41.

The device according to the invention is in its construction not limited to those embodiments shown in Figs. 1 - 7, but can be modified within the framework of the attached claims. For example the length and diameter of the elastic cylinder can be altered depending on the rebound action desired. The number of coulters can also be varied and the bearings device is naturally not limited to the agricultural implements shown, but can be used on other machines, such as a machine without folding side

sections. The elastic rods are favourably circular cylindrical, but can also have another suitable cross-sectional shape, such as oval, elliptical or other suitable form.

CLAIMS

1. Device at an agricultural implement (1), which device comprises one of at least two bearings halves (19, 20) containing bearings, which is arranged between at least one soil cultivating implement (5, 37) and the frame (2) of the agricultural implement, which is comprised of at least one beam (12) extending through the bearings and a bearings carrying arm (14, 39), wherein at least two elastic, elongated, rebounding elements, preferably of rubber, are arranged between said bearings halves and said beam and wherein at least first and second restraining means (22 and 21) are arranged to hold together the bearings halves, characterised in that at least the first of said restraining means is comprised of at least one rebounding apparatus (22), which is adapted to elastically press together one side of the bearings halves (19, 20) and is assembled at these with the aim of on additional tensioning of the bearings elastically pliably moving apart said one side of the bearings halves.

2. Device according to Claim 1, characterised in that said first restraining means (22) is adapted to hold together flanges (19b, 20b) arranged on one side of the bearings halves (19, 20).

3. Device according to Claim 1 or 2, characterised in that the rebounding apparatus (22) comprises a fastening consisting of a bolt (30) and a stop nut (35), between which is arranged at least one element of an elastically pliable material.

4. Device according to Claim 3, characterised in that said element is a hollow cylinder of rubber or similar material.

5. Device according to Claim 3, characterised in that said element is a coil spring.

6. Device according to any one of Claims 1 - 5, characterised in that said second restraining means (21) comprises an additional rebounding part, which has a greater spring constant than said rebounding apparatus (22).

7. Device according to Claim 6, characterised in that said additional rebounding part is a spring washer.

8. Device according to any one of Claims 1 - 5, characterised in that said bearings halves are so designed and/or have such a thickness that they allow a predetermined rebound action.

AMENDED CLAIMS
received by the International Bureau on 16 April 2012 (16.04.2012)

1. Device at an agricultural implement (1), which device comprises an of at least two bearing halves (19, 20) containing bearing which is arranged between a frame (2) of the agricultural implement and at least one soil cultivating implement (5, 40), said frame and said soil cultivating implement comprising at least one beam (12, 41) extending through the bearing and a bearing carrying arm (14, 39), respectively, wherein at least two elastic, elongated, rebounding elements, preferably of rubber, are arranged between said bearing halves and said beam and wherein at least first and second restraining means (22 and 21) are arranged to hold together the bearing halves, characterised in that at least the first of said restraining means comprises at least one rebounding apparatus (22), which is adapted to elastically press together one side of the bearing halves (19, 20) and is assembled at these with the aim of on additional tensioning of the bearing elastically pliably moving apart said one side of the bearing halves.

2. Device according to Claim 1, characterised in that said first restraining means (22) is adapted to hold together flanges (19b, 20b) arranged on one side of the bearing halves (19, 20).

3. Device according to Claim 1 or 2, characterised in that the rebounding apparatus (22) comprises a fastening consisting of a bolt (30) and a stop nut (35), between which is arranged at least one element of an elastically pliable material.

4. Device according to Claim 3, characterised in that said element is a hollow cylinder of rubber or similar material.

5. Device according to Claim 3, characterised in that said element is a coil spring.

6. Device according to any one of Claims 1 - 5, characterised in that said second restraining means (21) comprises an additional rebounding part, which has a greater spring constant than said rebounding apparatus (22).

7. Device according to Claim 6, characterised in that said additional rebounding part is a spring washer.

8. Device according to any one of Claims 1 - 5, characterised in that said bearing halves are so designed and/or have such a thickness that they allow a predetermined rebound action.

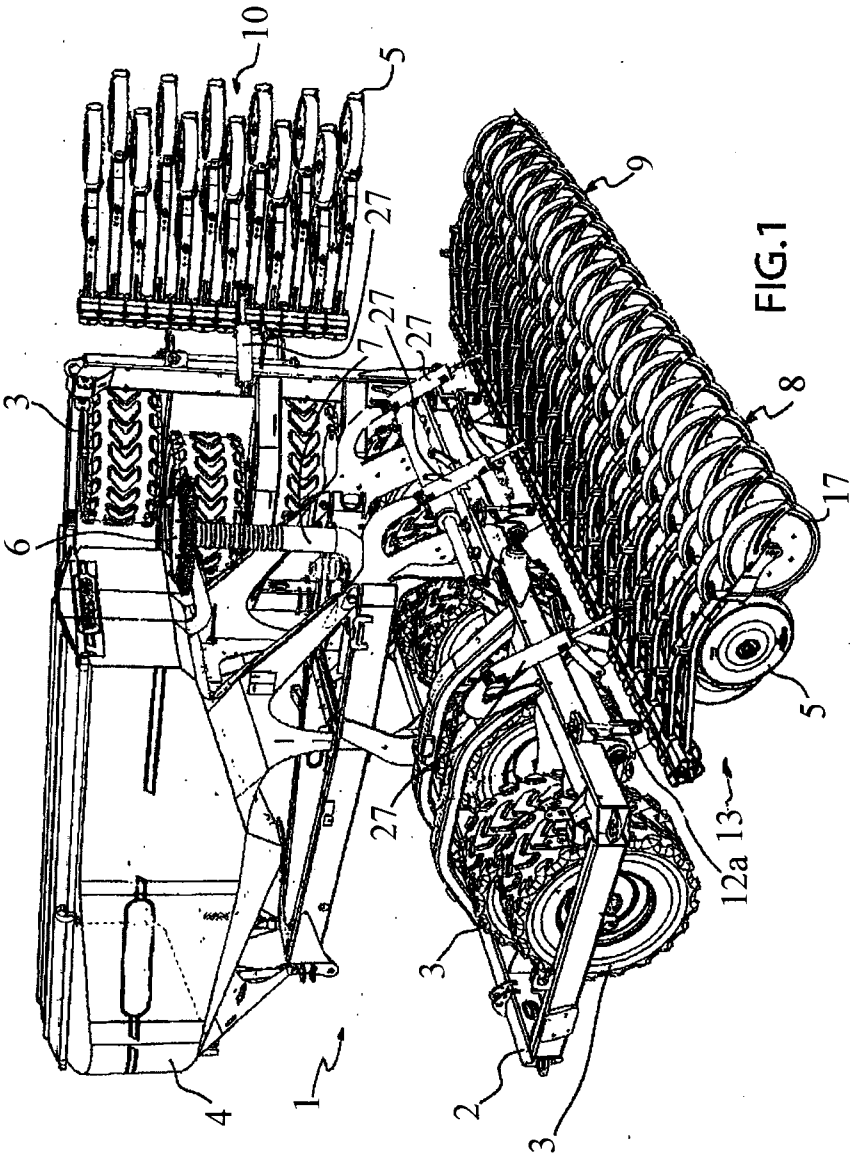

FIG.1

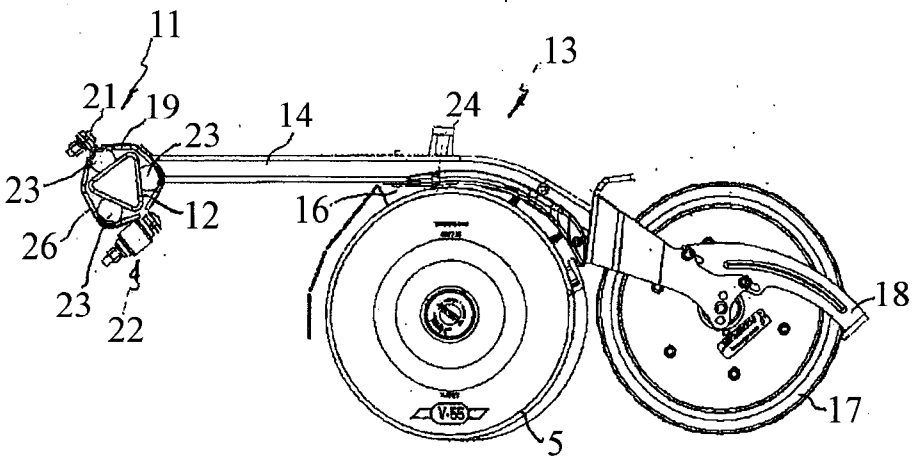
11
13
21
19
14
24
23
23
12
16
26
23
22
18
17
5

Fig. 2

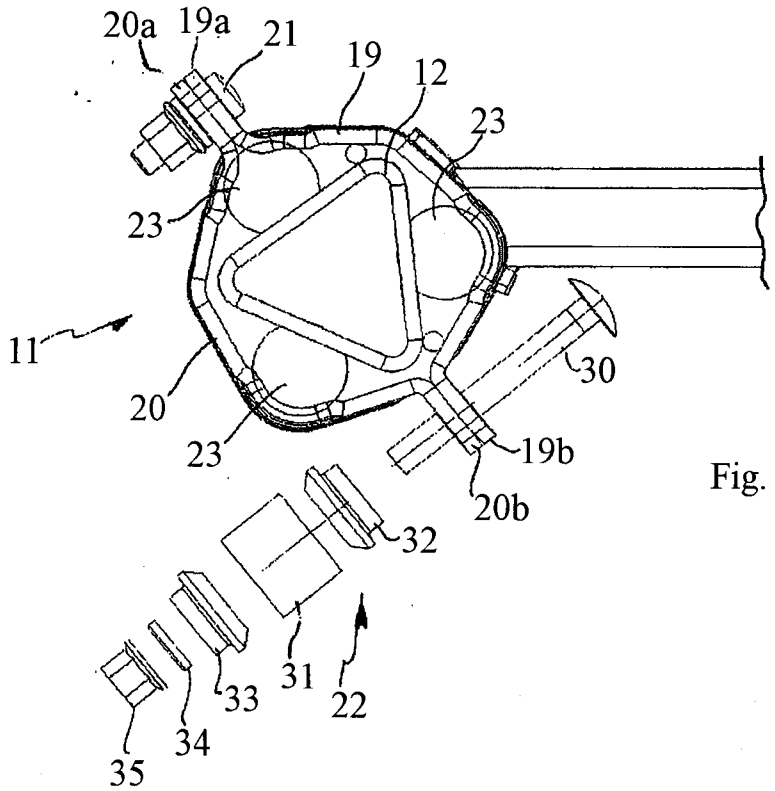
20a
19a
21
19
12
23
23
11
30
20
23
19b
20b
32
31
22
33
34
35

Fig. 3

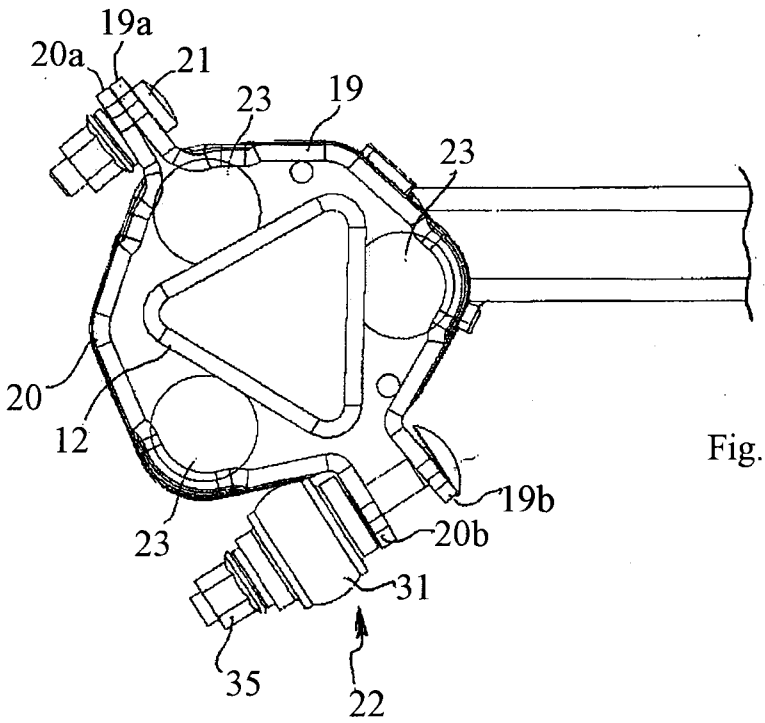
19a
20a
21
23
19
23
20
12
23
19b
20b
31
35
22

Fig. 4

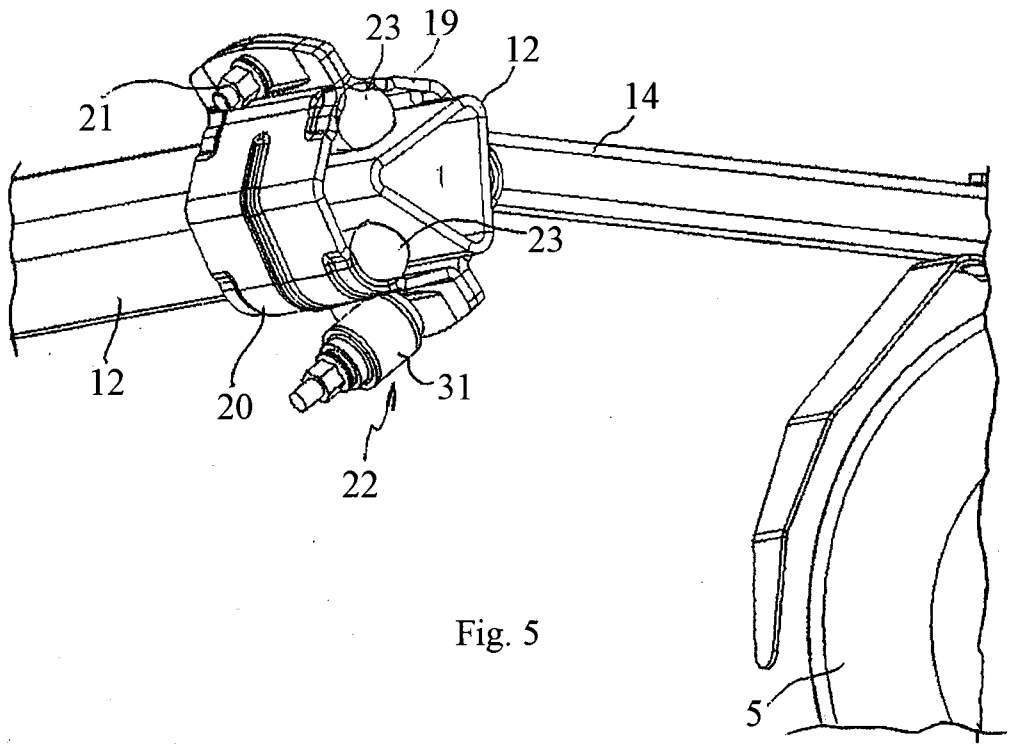
23
19
12
21
14
23
12
20
31
22
5

Fig. 5

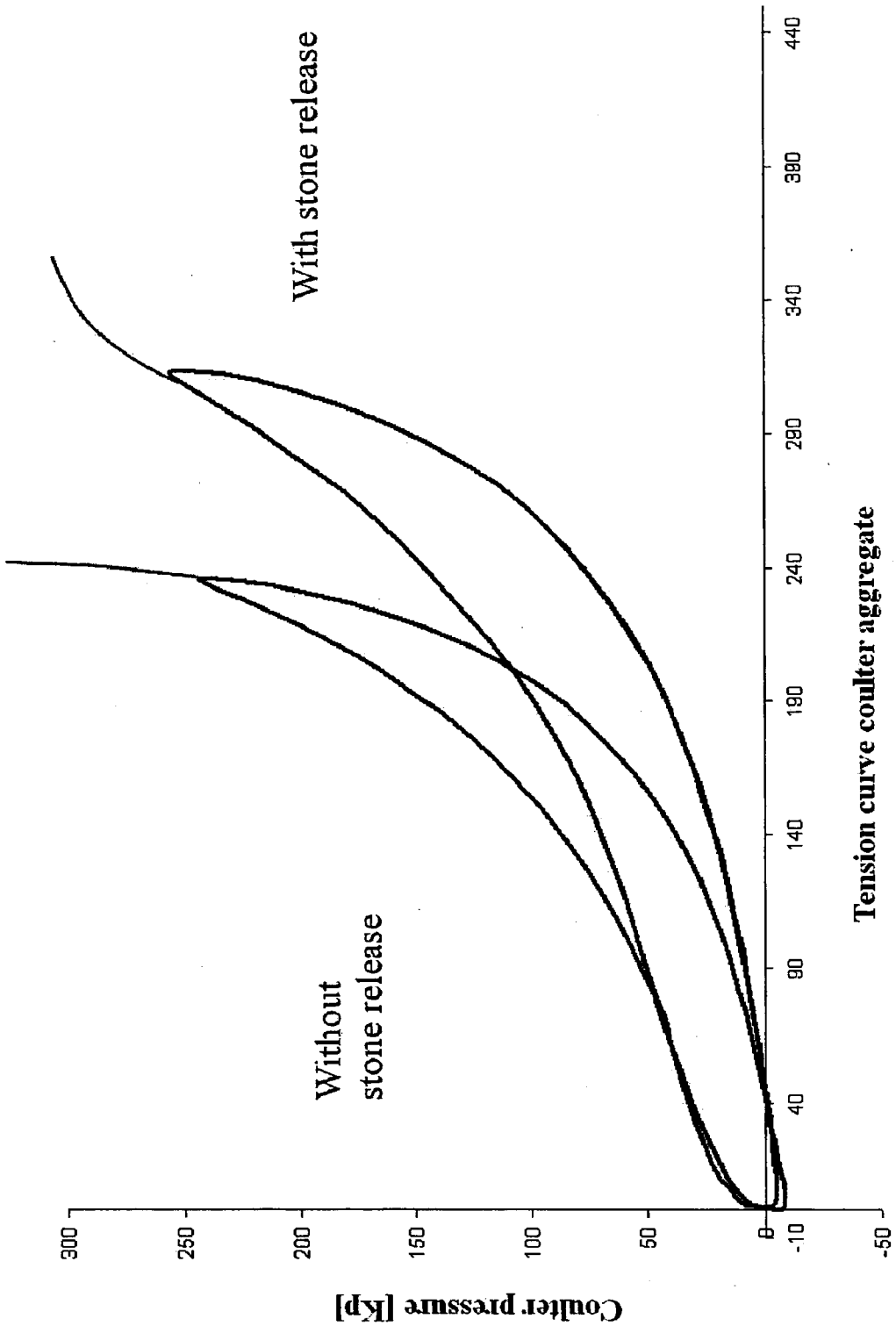
With stone release
Without
stone release
Tension curve coulter aggregate
Coulter pressure [kp]
300
250
200
150
100
50
0
-10
-50
40
90
140
190
240
290
340
390
440

Fig.6

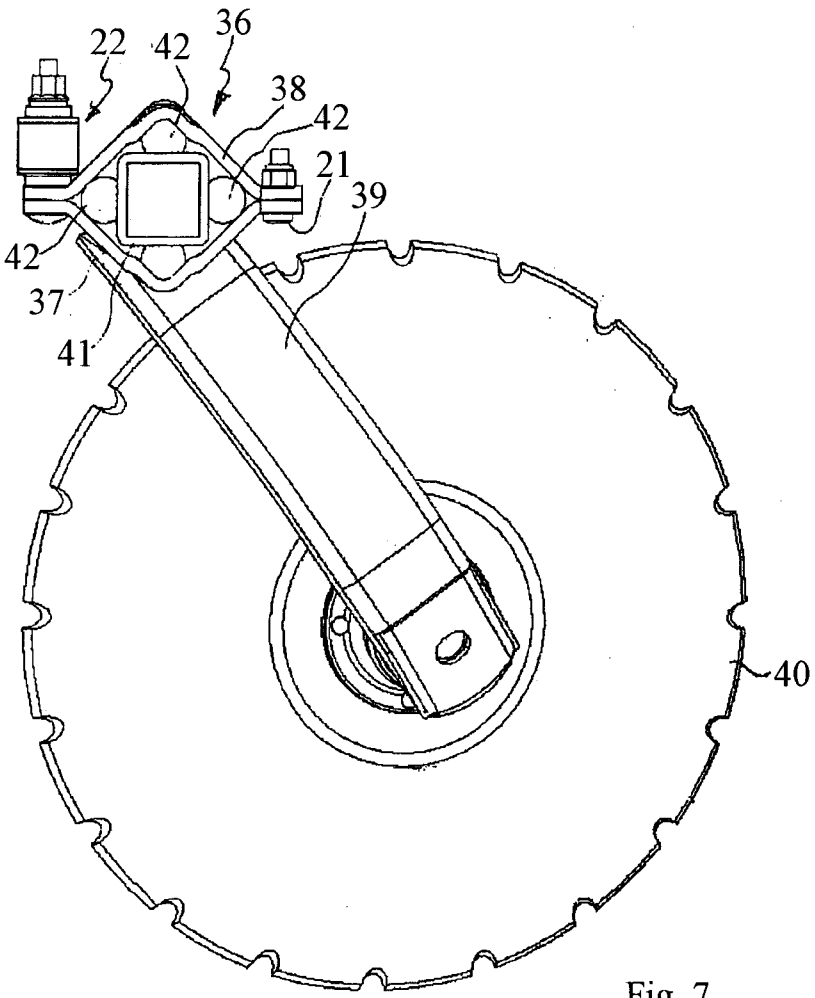

Fig. 7

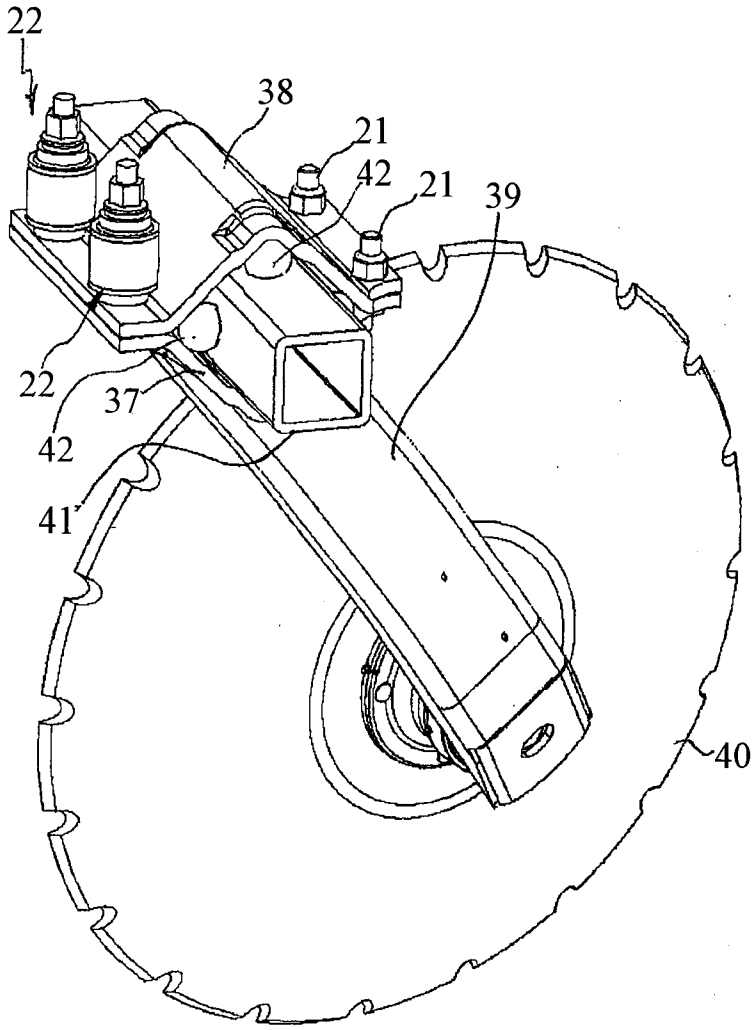

Fig. 8

INTERNATIONAL SEARCH REPORT

International application No.
PCT/SE2011/051499

A. CLASSIFICATION OF SUBJECT MATTER

IPC: see extra sheet

According to International Patent Classification (IPC) or to both national classification and IPC

B. FIELDS SEARCHED

Minimum documentation searched (classification system followed by classification symbols)

IPC: A01B, A01C, F16F

Documentation searched other than minimum documentation to the extent that such documents are included in the fields searched

SE, DK, FI, NO classes as above

Electronic data base consulted during the international search (name of data base and, where practicable, search terms used)

EPO-Internal, PAJ, WPI data

C. DOCUMENTS CONSIDERED TO BE RELEVANT

Category*	Citation of document, with indication, where appropriate, of the relevant passages	Relevant to claim No.
A	EP 1541003 A1 (RABE AGRARSYSTEME GMBH & COKG - (B1) RABE AGRI GMBH [DE]), 15 June 2005 (2005-06-15); whole document --	1
A	DE 10204160 A1 (AMAZONEN WERKE DREYER H), 7 August 2003 (2003-08-07); whole document --	1
A	DE 102006038190 A1 (AMAZONEN WERKE DREYER H), 21 February 2008 (2008-02-21); whole document --	1
A	FR 2842699 A1 (EVIN MICHEL), 30 January 2004 (2004-01-30) --	1

☒ Further documents are listed in the continuation of Box C. ☒ See patent family annex.

* Special categories of cited documents:

"A" document defining the general state of the art which is not considered to be of particular relevance

"E" earlier application or patent but published on or after the international filing date

"L" document which may throw doubts on priority claim(s) or which is cited to establish the publication date of another citation or other special reason (as specified)

"O" document referring to an oral disclosure, use, exhibition or other means

"P" document published prior to the international filing date but later than the priority date claimed

"T" later document published after the international filing date or priority date and not in conflict with the application but cited to understand the principle or theory underlying the invention

"X" document of particular relevance; the claimed invention cannot be considered novel or cannot be considered to involve an inventive step when the document is taken alone

"Y" document of particular relevance; the claimed invention cannot be considered to involve an inventive step when the document is combined with one or more other such documents, such combination being obvious to a person skilled in the art

"&" document member of the same patent family

Date of the actual completion of the international search	Date of mailing of the international search report
17-02-2012	17-02-2012

Name and mailing address of the ISA/SE	Authorized officer
Patent- och registreringsverket Box 5055 S-102 42 STOCKHOLM Facsimile No. + 46 8 666 02 86	Magnus Thorén Telephone No. + 46 8 782 25 00

INTERNATIONAL SEARCH REPORT

International application No.
PCT/SE2011/051499

C (Continuation). DOCUMENTS CONSIDERED TO BE RELEVANT

Category*	Citation of document, with indication, where appropriate, of the relevant passages	Relevant to claim No.
A	GB 1398138 A (REJNA SPA A), 18 June 1975 (1975-06-18); figures 1,5 --	1
A	GB 652266 A (HERMANN NEIDHART), 18 April 1951 (1951-04-18); whole document -- --------	1

International application No.
PCT/SE2011/051499

Continuation of: second sheet

International Patent Classification (IPC)

A01B 61/04 (2006.01)
F16F 1/54 (2006.01)
A01C 5/06 (2006.01)

Download your patent documents at www.prv.se

The cited patent documents can be downloaded:

- From "Cited documents" found under our online services at www.prv.se (English version)
- From "Anförda dokument" found under "e-tjänster" at www.prv.se (Swedish version)

Use the application number as username. The password is **SJEJLBKWDM**.

Paper copies can be ordered at a cost of 50 SEK per copy from PRV InterPat (telephone number 08-782 28 85).

Cited literature, if any, will be enclosed in paper form.

EP	1541003	A1	15/06/2005	AT	480987	T	15/10/2010
				DE	502004011655	D1	28/10/2010
				DE	10358208	A1	14/07/2005
DE	10204160	A1	07/08/2003	NONE			
DE	102006038190	A1	21/02/2008	NONE			
FR	2842699	A1	30/01/2004	NONE			
GB	1398138	A	18/06/1975	DE	7239531	U	01/02/1973
				FR	2166951	A7	17/08/1973
				IT	939182	B	10/02/1973
GB	652266	A	18/04/1951	BE	480880	A	-
				CH	253318	A	29/02/1948
				DE	972239	C	11/06/1959
				FR	957495	A	20/02/1950