(12) INTERNATIONAL APPLICATION PUBLISHED UNDER THE PATENT COOPERATION TREATY (PCT)

(19) World Intellectual Property Organization
International Bureau

(43) International Publication Date
11 October 2007 (11.10.2007)

PCT

(10) International Publication Number
WO 2007/113875 A1

(51) International Patent Classification:
A61H 1/00 (2006.01)

(21) International Application Number:
PCT/IT2006/000224

(22) International Filing Date: 4 April 2006 (04.04.2006)

(25) Filing Language: English

(26) Publication Language: English

(71) Applicant *(for all designated States except US)*: **BIOS S.R.L.** [IT/IT]; Via Guido Rossa n.10/12, I-20093 Cologno Monzese (IT).

(72) Inventor; and

(75) Inventor/Applicant *(for US only)*: **CASALINO, Aldo** [IT/IT]; c/o Bios S.r.l., Via Pisa, 61, I-20093 Cologno Monzese (IT).

(74) Agents: **CRIPPA, Paolo** et al.; Jacobacci & Partners S.p.A., Piazza Della Vittoria, 11, I-25122 Brescia (IT).

(81) Designated States *(unless otherwise indicated, for every kind of national protection available)*: AE, AG, AL, AM, AT, AU, AZ, BA, BB, BG, BR, BW, BY, BZ, CA, CH, CN, CO, CR, CU, CZ, DE, DK, DM, DZ, EC, EE, EG, ES, FI, GB, GD, GE, GH, GM, HR, HU, ID, IL, IN, IS, JP, KE, KG, KM, KN, KP, KR, KZ, LC, LK, LR, LS, LT, LU, LV, LY, MA, MD, MG, MK, MN, MW, MX, MZ, NA, NG, NI, NO, NZ, OM, PG, PH, PL, PT, RO, RU, SC, SD, SE, SG, SK, SL, SM, SY, TJ, TM, TN, TR, TT, TZ, UA, UG, US, UZ, VC, VN, YU, ZA, ZM, ZW.

(84) Designated States *(unless otherwise indicated, for every kind of regional protection available)*: ARIPO (BW, GH, GM, KE, LS, MW, MZ, NA, SD, SL, SZ, TZ, UG, ZM, ZW), Eurasian (AM, AZ, BY, KG, KZ, MD, RU, TJ, TM), European (AT, BE, BG, CH, CY, CZ, DE, DK, EE, ES, FI, FR, GB, GR, HU, IE, IS, IT, LT, LU, LV, MC, NL, PL, PT, RO, SE, SI, SK, TR), OAPI (BF, BJ, CF, CG, CI, CM, GA, GN, GQ, GW, ML, MR, NE, SN, TD, TG).

Published:
— *with international search report*

For two-letter codes and other abbreviations, refer to the "Guidance Notes on Codes and Abbreviations" appearing at the beginning of each regular issue of the PCT Gazette.

(54) Title: BODY TREATMENT AND ANTI-AGEING APPARATUS

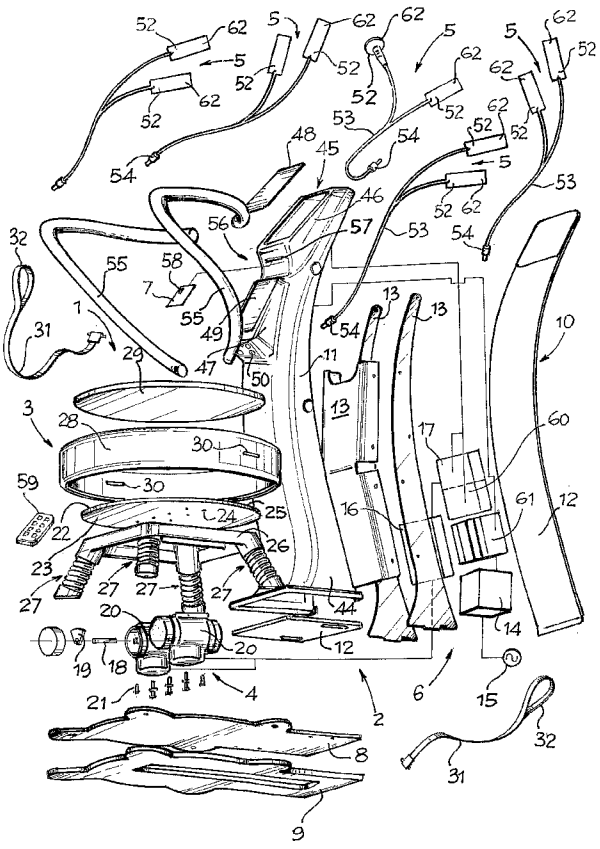

(57) Abstract: A body treatment apparatus comprises: a support structure; at least one footboard hanging on said support structure so as to allow at least an oscillatory movement thereof in the direction of the gravitational action; said footboard being suitable for supporting at least a part of body to be treated; means for stressing said footboard with an oscillation in the direction of the gravitational action, so that on at least said part of the body supported by said footboard, an action is determined suitable for varying the effect of the gravitational action on said at least one part of the body; wherein the apparatus further comprises means for inducing onto the same at least one part of the body supported by said footboard an action suitable for determining a hyperthermy in at least a portion of said at least one part of the body; control and actuation means that actuate and control at least the concurrent operation of said means for stressing the footboard and said hyperthermy inducing means suitable for warming in a controlled manner the at least one portion of said at least one part of the body oscillating on the footboard.

WO 2007/113875 A1

DESCRIPTION

"Body treatment and anti-ageing apparatus"

[001]. The present invention relates to a body treatment apparatus.

[002]. In particular, the invention relates to an apparatus for the treatment of cellulite and also for physiotherapy, rehabilitation and for aesthetic and medical-aesthetic treatments in general.

[003]. Even more in particular, the present invention relates to an apparatus that comprises a vibrating plate or footboard suitable for supporting the body of the individual to be treated and is capable of applying a quick sinusoidal vertical motion to such body.

[004]. The effects of the vibration imparted on the body in the direction of the gravitational action have been studied recently.

[005]. Burke D. and Schiller HH (Neurosurg. Psychiatry, 39 (8): 729-741, 1976) have proved that in the human being, the vibrations activate single sympathetic and poly-sympathetic connections. The latter are intended for generating reflex contractions while the firmer only influence the temporal patterns of the pulse trains of the motory nerve tracts.

[006]. Lebedev MA, Poliakov AV (Neirofiziologiia 23 1:

57-65, 1991) have suggested that the vibrations induce a strong enhancement of the activation of the motory nerves trough the myotatic reflex (stretch reflex).

[007]. Ariizumi M. and Okada A. (Eur J Appl Physiol, 52 1:15 - 19, 1983) have shown that by applying a vibration with frequency increase from 5 Hz to 30 Hz, an increase of the plasmatic cortisone concentration occurs in rat's brain and at the same time, a positive correlation is observed between 5-HT and cortisone.

[008]. Homma et al. (J Appl Pysiol 50,1: 107-111, 1981) proved that treatments with vibrations increase the respiratory volume and the respiratory minute/volume. These effects were ascribed to segmental vibratory reflexes due to inspiratory and expiratory muscles.

[009]. Bosco et al. altri (Bosco Carmelo and Konii PV Eur J Appl Physio, 45:209-219, 1980, Bosco C. and Coll. Biology of Sport, 15, 3: 157-164, 1998; Bosco C. and Coll. Clinical Physiology 19: 1-6, 1999; Bosco C. and Coll. Eur J Appl. Physiol, 79, 4: 306-311, 1999) proved a mechanical improvement of the leg extensor muscles (mechanical power developed during exercises at the press with 70-14 0Kg loads), in volleyball players after the acute administration of only 10 minutes of vibrations. The athletes were subject to total vibration treatments while

they were in half-squat position on a vibrating footboard that oscillated at a frequency of about 30 Hz.

[0010]. In a further experiment an increase of the muscle power was observed in the performance of jumps after just 10 days of treatment with vibratory stimuli applied 10 minutes a day on well-trained athletes.

[0011]. An acute administration of a few effective minutes of vibration applied to the arm showed a statistically significant increase of the muscular power of the arm flexor muscles (humerus biceps and radial arm) on some boxers.

[0012]. By a dumbbell subject to vibration, an increase of the mechanical power was observed during the performance of 30 repetitions of press-ups of the forearm on the arm with a 2.8 Kg load.

[0013]. Devis, J.M. and Bailey, S.P. (Med. Sci. Sp. Exer. 29(1): 45-57; 1997) proved that vibrations induce an alteration of the inhibitory systems that are generally present during the execution of voluntary movements caused by the reduction of the stimuli from the central nervous system to reach the motory nerves.

[0014]. Clinical studies conducted on patients with traumas of the peripheral nerves and articular contractures have proved the efficacy of the treatment

with vibration accompanied by conventional traction methods (Levitskii and coll., Vopr Kurotol Fizioter Lech Fiz Kult, 5: 26-28, 1997). Very recent experiments have shown a remarkable improvement of the flexibility of the vertebral column and of the leg flexor muscles after a vibratory treatment. This method has unequivocally proved to be more effective than the traditional methods, such as the ballistic one, the passive elongation, the static one and the PNF (Bosco C and coll. Clinical Physiology 19: 1-6, 1999). The vibratory stimulation brought to an improvement of the pain on 69% of the treated patients. The application time was about 24-25 minutes, and it was even more effective by applying also a 1 kg weight. It seems that treatments with high-frequency vibrations induce less stress on both tendons and muscles (Park HS e Martin BJ. Scand J Work Environ Health, 19, 1 : 3 5 - 42, 1993).

[0015]. It has been suggested that also the muscular tissue, besides the nervous tissues, are strongly influenced by the vibration. To this end, 5 hours/day for two days were sufficient to induce an increase of the section of both slow and fast muscular fibres of rats subject to two different vibratory treatment frequencies (Necking LE and coll. Scand. J. Plast. Reconstr. Surg.

Hand Surg. 3 0: 99, 1996).

[0016]. Even though the studies aimed at the application of vibrations for improving osteoporosis (osteopenia) are difficult to find in the international literature, it can be said that these new methodologies exhibit doubtlessly effective indications. These statements are supported by the fact that the clear improvement of the muscular functions induced by the administration of vibratory treatments produces very effective stimuli on the biological functions of the bones. These stimuli are especially evident on the transversal axis, which is the weakest one and thus highly subject to fractures (Bosco C and coll. Clinical Physiology 19: 1-6, 1999). US 2005/0131319 A1 (der Meer) discloses an apparatus for the body vibration comprising a platform to which motors are applied for inducing an oscillation.

[0017]. Despite being satisfactory from several points of view and in particular for the increase of the muscular strength, this vibrating platform does not allow obtaining medical-cosmetic and aesthetic treatments and in particular, the reduction of cellulite and fat, as well as applying these treatments in reduced times.

[0018]. The object of the present invention is to propose an apparatus capable of solving the disadvantages of the

prior art and in particular, of allowing the application of medical-cosmetic and aesthetic treatments.

[0019]. This object is achieved by an apparatus as described in claim 1, as well as by a method as described in claim 140.

[0020]. Further features and advantages of the apparatus according to the invention will appear more clearly from the following description of preferred embodiments thereof, given by way of a non-limiting example with reference to the annexed figures, wherein:

[0021]. figure 1 shows a perspective view of an apparatus according to the invention;

[0022]. figure 2 shows a front view of the apparatus of figure 1;

[0023]. figure 3 shows a perspective view of the apparatus of figure 1 without the plate or platform or footboard support structure;

[0024]. figure 4 shows a side view of the apparatus of figure 1;

[0025]. figure 5 shows a perspective view of the apparatus of figure 1 without some panels covering the support structure and the connecting plate and the footboard support structure;

[0026]. figure 6 shows a side view of a detail of the

footboard hanging means;

[0027]. figure 7 shows a side exploded view of the footboard hanging means of figure 6;

[0028]. figure 8 shows an axonometric exploded view of an apparatus according to the invention;

[0029]. figure 9 shows a perspective exploded view of an apparatus according to a further embodiment;

[0030]. figure 10 shows a perspective view of an apparatus according to a different embodiment;

[0031]. figure 11 shows a front view of the apparatus of figure 2;

[0032]. figure 12 shows a block diagram of an embodiment of the layout of the actuation and control means;

[0033]. figure 13 shows two possible patterns of the oscillation induced in the footboard;

[0034]. figure 14 shows an application diagram of the means for inducing hyperthermia or hyperthermy on a portion of a part of body being treated, according to an embodiment;

[0035]. figure 15 shows an application diagram of the means for inducing hyperthermy on a portion of a part of body being treated, according to a further embodiment;

[0036]. figure 16 shows a perspective view of a detail of the apparatus with a pair of plates for the application of

a radiofrequency field on a portion of the treated body part;

[0037]. figure 17 shows a perspective view of a detail of the apparatus with a handpiece and a plate for the application of a radiofrequency field;

[0038]. figure 18 shows a front view of a series of plates of different sizes for the handpiece of figure 16;

[0039]. figure 19 shows a perspective view of a detail of the apparatus with a plate for the application of infrared rays on the portion of body part to be treated;

[0040]. figure 20 shows a perspective view of a detail of the apparatus with a pair of plates, each independently suitable for the application of ultrasounds on the portion of body part to be treated;

[0041]. figure 21 shows the pattern over time of an excitation signal of the heads of the plate of figure 20, according to a sweeping excitation;

[0042]. figures 22, 23, 24 and 25 show perspective views of three of the possible usage postures of the apparatus.

[0043]. Hereinafter, reference is made to "vertical direction" to indicate a direction parallel to the direction of the gravitational action.

[0044]. Hereinafter, reference is made to "suspended" or "hanging" to indicate an object that is constrained to

another but free to move relative thereto in at least one predetermined direction.

[0045]. Hereinafter, reference is made to "supported" to indicate the constraint of support of an object or of a part of the body on another object, so that this other object can impose on the first one at least an action of oscillation or vibration.

[0046]. Hereinafter, reference is made to "vibration" to indicate an oscillatory motion of predetermined width and frequency.

[0047]. In accordance with a general embodiment of an apparatus according to the invention, an apparatus 1 for body treatment comprises a support structure, globally indicated with reference numeral 2, and at least one plate or platform or footboard 3 suspended or hanging on said support structure 2 so as to allow at least an oscillatory movement thereof in the direction of the gravitational action.

[0048]. Said footboard 3 is suitable for supporting at least a part of body to be treated.

[0049]. The apparatus comprises means 4 for stressing said footboard 3 with an oscillation in the direction of the gravitational action, so that on at least said part of the body supported by said footboard 3, an action is

determined suitable for varying the effect of the gravitational action on said at least one part of the body.

[0050]. The apparatus further comprises means for inducing onto the same at least one part of the body supported by said footboard an action suitable for determining an hyperthermia or hyperthermy 5 in at least a portion of said at least one part of the body.

[0051]. Said apparatus also comprises control and actuation means 6 that actuate and control at least the concurrent operation of said means 4 for urging or activating or stressing the footboard and said hyperthermy inducing means 5 suitable for warming in a controlled manner the at least one portion of said at least one part of the body oscillating on the footboard.

[0052]. Handpieces suitable for emitting electromagnetic radiofrequency (RF) fields are in se known. An example of devices of this kind in described in US 5,778,894 (Elizabeth Arden Co.) which, even if satisfactory from many points of view, apply the radiofrequency field so that at the end of the hyperthermy induced in the fat layer, this recomposes to form the undesired mass, making the application only partly effective and forcing to prolonged and repeated applications which, in some cases,

may be harmful.

[0053]. Surprisingly, the apparatus of the invention simultaneously applies a vibration to the portion of body supported by the footboard and a simultaneous hyperthermy to at least a part of said portion of body.

[0054]. In accordance with a second general embodiment of the invention, an apparatus 1 for body treatment comprises a support structure 2 and at least one footboard 3 hanging on said support structure 2 so as to allow at least an oscillatory movement thereof in the direction of the gravitational action.

[0055]. Said footboard 3 is suitable for supporting at least a part of body to be treated.

[0056]. Said apparatus 1 further comprises means 4 for stressing said hanging footboard 3 according to an oscillation in the direction of the gravitational action, so that on at least said part of the body supported by said footboard 3, an action is determined suitable for varying the effect of the gravitational action on said at least one part of the body.

[0057]. Said apparatus 1 further comprises means 7 for storing a strategy of application of said apparatus on said at least one part of the body and control and actuation means 6 that actuate and control at least the

operation of said means for stressing the footboard based on said strategy of application of said apparatus on said at least one part of the body stored on said storage means 7.

[0058]. In accordance with an even further general embodiment, an apparatus 1 for body treatment comprises means 5 for inducing on at least one part of the body an action suitable for determining a hyperthermy in at least a portion of said at least one part of the body.

[0059]. Said apparatus further comprises means 7 for storing a strategy of application of said apparatus on said at least one part of the body and control and actuation means 6 that actuate and control at least the operation of said hyperthermy inducing means suitable for warming in a controlled manner the at least one portion of said at least one part of the body.

[0060]. Said actuation and control means 6 actuate and control at least the operation of said hyperthermy inducing means 5 based on said strategy of application of said apparatus on said at least one part of the body stored on said storage means 7.

[0061]. As can be seen in the figures, apparatus 1 comprises a support structure 2. Said support structure 2 comprises at least one base 8 (figure 8).

[0062]. In accordance with an embodiment, said support structure 2 comprises a base 8 resting on anti-vibration means 9 that interpose between said base 8 and a base for apparatus 1 so as to isolate said apparatus 1 from said base.

[0063]. In accordance with an embodiment, said anti-vibration means 9 comprise a mat of anti-vibration material, such as a synthetic material or rubber.

[0064]. In accordance with an embodiment, the support structure 2 comprises a column or pillar like element or post, globally indicated with reference numeral 10, suitable for containing at least partly said actuation and control means 6.

[0065]. Preferably, said post 10 comprises a box-shaped post structure 11 associable to panels 12 for closing and accessing the space delimited by said post structure.

[0066]. Advantageously, inside said post structure there is provided a frame 13 for supporting and fixing the actuation and control means 6.

[0067]. In accordance with an embodiment, said actuation and control means 6 comprise at least one transformer 14 suitable for connecting said means 6 to the power supply network 15.

[0068]. In accordance with an embodiment, said actuation

and control means 6 comprise at least one control driver 16 of the footboard stressing means 4.

[0069]. In accordance with an embodiment, said actuation and control means 6 comprise control means or control device or control 17 of at least one control driver 16 of means 4 for stressing footboard 3.

[0070]. In accordance with an embodiment, said actuation and control means 6 comprise a control device 17 of at least one control driver 16 of means 4 for stressing footboard 3 so as to control in open loop the oscillation frequency of footboard 3.

[0071]. In accordance with a further embodiment, said actuation and control means 6 comprise a control device or control 17 of at least one control driver 16 of means 4 for stressing footboard 3 fed back so as to control in closed loop the oscillation frequency of footboard 3.

[0072]. In accordance with an embodiment, the footboard stressing means 4 apply a predetermined oscillation frequency to footboard 3, for example adjustable as desired between 15 Hz and 70 Hz.

[0073]. In accordance with a further embodiment, the footboard stressing means 4 apply a predetermined oscillation frequency to footboard 3, for example adjustable as desired between 20 Hz and 60 Hz.

[0074]. In accordance with a further embodiment, said actuation and control means 6 comprise a control device or control 17 of at least one control driver 16 of means 4 for stressing footboard 3 so as to control in open loop the oscillation width of footboard 3.

[0075]. In accordance with a further embodiment, said actuation and control means 6 comprise a control device or control 17 of at least one control driver 16 of means 4 for stressing footboard 3 so as to control in closed loop the oscillation width of footboard 3.

[0076]. Advantageously, the oscillation width of footboard 3 is adjustable between 1 mm and 7 mm and preferably, the oscillation width of footboard 3 is adjustable between 2 mm and 5 mm.

[0077]. In accordance with a further embodiment, said actuation and control means 6 comprise a control device or control 17 of at least one control driver 16 of means 4 for stressing footboard 3 so as to control in open loop the oscillation time of footboard 3.

[0078]. In accordance with a further embodiment, said actuation and control means 6 comprise a control device or control 17 of at least one control driver 16 of means 4 for stressing footboard 3 so as to control in closed loop the oscillation time of footboard 3.

[0079]. Advantageously, the oscillation time of footboard 3 is adjustable between 30 seconds and 60 seconds.

[0080]. Preferably, the oscillation time of footboard 3 is adjustable into operating intervals and stand-by intervals.

[0081]. Advantageously, the oscillation time of footboard 3 is adjustable into a plurality of intervals.

[0082]. For example, the oscillation time of the footboard is adjustable into 5 intervals.

[0083]. In accordance with an embodiment, said means 4 for stressing footboard 3 comprise at least one rotor 18 comprising an eccentric mass 19.

[0084]. Advantageously, said means 4 for stressing footboard 3 comprise at least one rotor 18 comprising an eccentric mass 19 of predetermined weight.

[0085]. Preferably, said means 4 for stressing footboard 3 comprise at least one rotor 18 comprising an eccentric mass 19 of predetermined eccentricity.

[0086]. In accordance with an embodiment, said means 4 for stressing footboard 3 comprise at least two rotors 18 comprising eccentric masses 19.

[0087]. In accordance with an embodiment, said means 4 for stressing footboard 3 comprise at least two rotors 18 comprising eccentric masses 19 counter-rotating relative

to each other.

[0088]. In accordance with an embodiment, said means 4 for stressing footboard 3 comprise at least two rotors 18 with parallel rotation axes comprising eccentric masses 19.

[0089]. In accordance with an embodiment, said means 4 for stressing footboard 3 comprise at least two rotors 18 with parallel rotation axes comprising counter-rotating eccentric masses 19.

[0090]. Advantageously, said means 4 for stressing footboard 3 comprise at least one rotor 18 keyed on an electric motor 20.

[0091]. In accordance with an embodiment, said means 4 for stressing the footboard comprise at least one rotor 18 keyed on a pneumatic motor.

[0092]. In accordance with an embodiment, said stressing means 4 stress footboard 3 with an oscillation of predetermined frequency.

[0093]. Advantageously, said stressing means 4 stress footboard 3 with an oscillation of frequency variable between 15 Hz and 70 Hz.

[0094]. Preferably, said stressing means stress the footboard with an oscillation of frequency variable between 20 Hz and 60 Hz.

[0095]. In accordance with an embodiment, said stressing means 4 stress footboard 3 with an oscillation of predetermined width.

[0096]. Advantageously, said stressing means 4 stress footboard 3 with an oscillation of width variable between 1 mm and 7 mm.

[0097]. Preferably, said stressing means 4 stress footboard 3 with an oscillation of width variable between 2 mm and 5 mm.

[0098]. In accordance with an embodiment, said stressing means 4 stress footboard 3 with an oscillation of predetermined time.

[0099]. Advantageously, said stressing means 4 stress footboard 3 with an oscillation of time variable between 30 seconds and 60 seconds.

[00100]. In accordance with an embodiment, said stressing means stress the footboard with an oscillation applied at intervals.

[00101]. Advantageously, said stressing means stress the footboard with an oscillation applied at more intervals of predetermined time.

[00102]. Preferably, said stressing means stress the footboard with an oscillation applied at 5 intervals of predetermined time.

[00103]. In accordance with an embodiment, said stressing means 4 are connected to said hanging footboard 3, for example by fixing screws 21 that fix the structure of said means 4 to the hanging footboard 3.

[00104]. In accordance with an embodiment, said stressing means 4 comprise a motor 20 connected to said hanging footboard 3.

[00105]. In accordance with an embodiment, said hanging footboard 3 comprises a connecting plate 22 having a bottom surface 23.

[00106]. Advantageously, said stressing means 4 are connected to the bottom surface 23 of the connecting plate 22.

[00107]. Said plate 22 advantageously exhibits seats 24 for seating the fixing screws 21 of the at least one motor 20 to footboard 3.

[00108]. In accordance with an embodiment, motor 20 comprises a casing fixed to the bottom surface 23 of the connecting plate 22.

[00109]. In accordance with an embodiment, said stressing means 4 comprise two motors 20 connected to the bottom surface 23 of the connecting plate 22, for example so as to have the rotor axes parallel to each other.

[00110]. In accordance with an embodiment, said

connecting plate 22 is sized so as to transmit the stress transmitted by the stressing means 4 to the entire top surface 25 thereof.

[00111]. In accordance with an embodiment, there is provided a stiffening frame 26 for reinforcing the connecting plate 22. Advantageously, said stiffening frame 26 is suitable for surrounding and keeping into position elastic support elements 27 of footboard 3.

[00112]. In accordance with an embodiment, on top of the connecting plate 22 there is provided a resting structure 28.

[00113]. Advantageously, said resting structure 28 exhibits an upturned cup shape.

[00114]. Said resting structure 28 is preferably fitted on the connecting plate 22.

[00115]. In accordance with an embodiment, on top of the resting structure 28 there is provided a non-slip mat 29.

[00116]. Said resting surface advantageously exhibits at least one and preferably two opposed seats 30 for connecting belts 31 suitable for being fitted or supported for transmitting the footboard vibration to parts of the body. Advantageously, said belts exhibit handles 32 suitable for being gripped by the hands.

[00117]. In accordance with an embodiment, footboard 3 is

constantly elastically stressed to be hung on the support structure 2 free to oscillate in the direction of the gravitational action.

[00118]. Advantageously, footboard 3 is hung to the support structure 2 by elastic support elements 27.

[00119]. Said elastic support elements 27, advantageously, elastically influence footboard 3 in inclined direction relative to the direction of the gravitational action.

[00120]. In accordance with an embodiment, there is provided a plurality of elastic support elements 27 directed so as to influence footboard 3 according to action directions converging in a point 33.

[00121]. Advantageously, the convergence point 33 of the actions of the plurality of elastic elements 27 is located on a line 34 perpendicular to the resting surface 35 of footboard 3 (Figure 4).

[00122]. Said perpendicular preferably passes by the barycentre and/or the centre of the resting structure of footboard 3.

[00123]. In accordance with an embodiment, the convergence point 33 is located at a distance 36 from footboard 3 equal to the substantial theoretical position of the barycentre of the portion of body or of the body

subject to treatment.

[00124]. In accordance with an embodiment, said elastic elements 27 comprise at least one spring (figures 6 and 7).

[00125]. In accordance with an embodiment, said spring 37 is buried, embedded or covered in/by elastic material, preferably synthetic.

[00126]. Advantageously, hooking and guiding elements 38 are located at the ends of the at least one spring 37.

[00127]. Preferably, there are provided bushes 38 having fixing means 40 of spring 37 at a first end 39 and a second end 41 provided with at least one seat 42 for seating and guiding the end of spring 37.

[00128]. Said fixing end 39 is preferably provided with an inclined surface 43 for resting and supporting the elastic elements 27.

[00129]. In accordance with an embodiment, said support structure 2 comprises a post 10.

[00130]. Said post 10 is fixed to base 8 by a bottom end 44 thereof.

[00131]. In accordance with an embodiment, post 10 comprises a box-shaped structure 11.

[00132]. Advantageously, in said box-shaped structure 11 there are seated the actuation, or command, and control

means 6 of means 4 for stressing footboard 3.

[00133]. Preferably, in said box-shaped structure 11 there are seated the command and control means 6 of the hyperthermy inducing means 5.

[00134]. In accordance with an embodiment, post 10 comprises a control unit 45 for the command and control means 6 of footboard 3 and of the hyperthermy inducing means 5.

[00135]. Advantageously, the control unit 45 comprises at least one operating console 46, 47 for controlling and displaying the operating parameters of footboard 3 and of the hyperthermy inducing means 5.

[00136]. Preferably, the control unit 45 comprises at least two operating consoles 46, 47 for controlling and displaying the operating parameters of footboard 3 and of the hyperthermy inducing means 5.

[00137]. In accordance with an embodiment, the control unit 45 comprises at least one screen 48 for controlling and displaying the operating parameters of footboard 3 and of the hyperthermy inducing means 5.

[00138]. Preferably, the control unit comprises two screens 48 and 49. As an alternative, a single screen or even a single console is provided in said control unit, but they may also be unified.

[00139]. In accordance with an embodiment, a first screen 48 is suitable for controlling and displaying the operating parameters of footboard 3 along with the postures for the proper use of apparatus 1.

[00140]. In accordance with an embodiment, screen 48 or 49 is suitable for displaying the proper position of the hyperthermy inducing means 5.

[00141]. Advantageously, a screen 49 is suitable for displaying and controlling the operating parameters of the hyperthermy inducing means 5.

[00142]. Preferably, screen 48 and/or 49 is an LCD display.

[00143]. Advantageously, screen 48 and/or 49 is a touch screen for entering the commands directly from the display. As an alternative, the commands are entered by a pushbutton panel.

[00144]. In accordance with an embodiment, post 10 comprises sockets 50 for connecting the hyperthermy inducing means 5.

[00145]. Advantageously, said hyperthermy means 5 comprise a handpiece 51 or plates 52 which, by a power supply cable 53, connect with plugs 54 to sockets 50 provided in post 10.

[00146]. In accordance with an embodiment, said post

supports at least one handle 55 usable for keeping the balance while using apparatus 1.

[00147]. Advantageously, said handle 55 surrounds at least partly the normal use space of apparatus 1.

[00148]. In accordance with an embodiment, said apparatus 1 further comprises means 56 for storing a strategy of application of said apparatus on said at least one part of the body.

[00149]. Advantageously, said actuation and control means 6 actuate and control at least the operation of said means 4 for stressing footboard 3 based on said strategy of application of said apparatus on said at least one part of the body stored on said storage means 56.

[00150]. With further advantage, said actuation and control means 6 actuate and control at least the operation of said means for inducing the hyperthermy 5 based on said strategy of application of said apparatus on said at least one part of the body stored on said storage means 56.

[00151]. In accordance with an embodiment, said means 56 for storing a strategy of application of said apparatus on said at least one part of the body comprise a unit 57 for writing and reading a memory card 7.

[00152]. Advantageously, said memory card 7 comprises a rewritable chip 58.

[00153]. In accordance with an embodiment, said apparatus 1 comprises a remote control 59 for actuating and/or programming the apparatus.

[00154]. In accordance with an embodiment, the hyperthermy inducing means comprise at least one handpiece applicable to the at least one part of the portion of body supported by the footboard.

[00155]. In accordance with an embodiment, said actuation and control means 6 comprise a control device 60 connectable to at least one driver 61 for generating and controlling the hyperthermy inducing means 5.

[00156]. Preferably, there are provided at least five drivers 61 for generating and controlling the hyperthermy inducing means 5.

[00157]. In accordance with an embodiment, said control unit 60 of the hyperthermy inducing means is fed back with a temperature sensor 62 preferably located in said hyperthermy inducing means 5, advantageously in a position suitable for contacting the derma of the body part portion of application of said means 5.

[00158]. In accordance with an embodiment, said at least one handpiece comprises a plate 52 suitable for being applied to the at least one part of the portion of body supported by the footboard.

[00159]. Advantageously, said plate 52 comprises an adhesive portion, for example an adhesive edge 63 suitable for adhering to said plate 52 and keeping it in contact with the derma.

[00160]. In accordance with an embodiment, at least one plate 52, preferably at least one pair of plates, is associated to a suit suitable for being fitted on the at least one part of the portion of body supported by the footboard.

[00161]. In accordance with an embodiment, said hyperthermy inducing means 5 comprise at least one pair of plates 52 suitable for transmitting electromagnetic energy.

[00162]. Advantageously, said hyperthermy inducing means 5 comprise at least one electromagnetic energy generator 61.

[00163]. Preferably, said hyperthermy inducing means 5 comprise five electromagnetic energy generators 61.

[00164]. In accordance with an embodiment, said hyperthermy inducing means 5 comprise at least one pair of plates 52 suitable for transmitting a radiofrequency field.

[00165]. Advantageously, said hyperthermy inducing means 5 comprise at least one radiofrequency field driver or

generator 61 and preferably five radiofrequency field generators 61.

[00166]. In accordance with an embodiment, said pair of plates 52 generates a predetermined radiofrequency field suitable for penetrating in the tissues of the at least one part of the at least one portion of body supported by the footboard.

[00167]. Advantageously, said pair of plates 52 generates a predetermined radiofrequency field, for example comprised between 100 KHz and 6 MHz.

[00168]. Preferably, said pair of plates 52 generates a predetermined radiofrequency field comprised between 100 KHz and 2 MHz.

[00169]. In accordance with an embodiment, said pair of plates 52 generates a radiofrequency field of predetermined power.

[00170]. Advantageously, said pair of plates 52 generates a radiofrequency field or predetermined power comprised between 10 W and 300 W.

[00171]. In accordance with an embodiment, said pair of plates 52 generates a radiofrequency field of predetermined frequency and power for determining a predetermined hyperthermy in the fatty layer of the at least one part of the at least one portion of body

supported by the footboard.

[00172]. Advantageously, said pair of plates 52 generates a radiofrequency field of predetermined frequency and power for determining a hyperthermy of 39-48 degrees Celsius in the fatty layer of the at least one part of the at least one portion of body supported by the footboard.

[00173]. Preferably, said pair of plates 52 generates a radiofrequency field of predetermined frequency and power for determining a hyperthermy of 43 degrees Celsius in the fatty layer of the at least one part of the at least one portion of body supported by the footboard.

[00174]. In accordance with an embodiment, said pair of plates 52 comprises means for the resistive connection to the derma of the portion of body to be treated.

[00175]. Advantageously, said pair of plates comprises a connecting surface to the derma covered with a conductive material.

[00176]. In accordance with an embodiment, said pair of plates 52 comprises means for the capacitive connection to the derma of the portion of body to be treated.

[00177]. Advantageously, said pair of plates 52 comprises a connecting surface to the derma covered with an insulating material.

[00178]. In accordance with an embodiment, said pair of

plates 52 exhibits a predetermined size.

[00179]. Preferably, said pair of plates 52 exhibits a predetermined connecting area to the surface of the at least one part of the at least one portion of body supported by the footboard (figure 18).

[00180]. In accordance with an embodiment, plates 52 of said pair of plates exhibit the same size.

[00181]. In accordance with a further embodiment, plates 52 of said pair of plates exhibit different size.

[00182]. In accordance with an embodiment, the hyperthermy inducing means 5 comprise at least one handpiece 51 and/or 52 applicable to the at least one part of the portion of body supported by the footboard comprising at least one temperature sensor 62 suitable for measuring the temperature of said part.

[00183]. Advantageously, said at least one temperature sensor 62 is connected to the actuation and control means 6 that actuate and control the concurrent operation of the means 4 for stressing footboard 3 and the hyperthermy inducing means 5.

[00184]. Preferably, said at least one temperature sensor 62 is fed back to the actuation and control means 6 that actuate and control the concurrent operation of the means 4 for stressing footboard 3 and the hyperthermy inducing

means 5 for a fed back control of at least the operation of said hyperthermy inducing means 5.

[00185]. Advantageously, said at least one temperature sensor 62 is fed back by the actuation and control means 6 comprising means for sensing the temperature reached by the fatty layer 64 of the at least one part of the at least one portion of body 65 supported by footboard 3 (figures 14 and 15).

[00186]. In accordance with an embodiment, said at least one temperature sensor 62 is fed back to the actuation and control means 6 that actuate and control the concurrent operation of the means 4 for stressing footboard 3 and the hyperthermy inducing means 5 for a fed back control of at least the frequency of the radiofrequency field.

[00187]. Advantageously, said at least one temperature sensor 62 is fed back to the actuation and control means 6 that actuate and control the concurrent operation of the means 4 for stressing footboard 3 and the hyperthermy inducing means 5 for a fed back control of at least the power of the radiofrequency field.

[00188]. Preferably, said at least one temperature sensor 62 is fed back to the actuation and control means 6 that actuate and control the concurrent operation of the means 4 for stressing footboard 3 and the hyperthermy inducing

means 5 for a fed back control of at least the operation of footboard 3.

[00189]. In accordance with an embodiment, said hyperthermy inducing means 5 comprise at least one handpiece 66 suitable for transmitting infrared energy.

[00190]. In accordance with an embodiment, said hyperthermy inducing means 5 comprise at least one infrared energy generator, for example with tungsten filament lamps, or with thermo-resistors.

[00191]. Advantageously, said handpiece 66 generates infrared energy with wavelength comprised between 40000 Ångstrom and 3500 Ångstrom.

[00192]. Preferably, said handpiece is a plate 66 suitable for adhering to the derma.

[00193]. In accordance with an embodiment, said handpiece 66 is an adhesive plate.

[00194]. In accordance with an embodiment, said hyperthermy inducing means 5 comprise at least one handpiece 67 suitable for transmitting ultrasounds.

[00195]. Advantageously, said hyperthermy inducing means 5 comprise at least one ultrasound generator.

[00196]. Preferably, said handpiece 67 generates ultrasounds with a predetermined frequency comprised between 30 KHz and 50 KHz so that with mechanical

vibrations, heat is induced while a cavitation effect is also present.

[00197]. As an alternative, said handpiece 67 generates ultrasounds from 800 KHz to 3 MHz producing heat with mechanical vibration.

[00198]. In accordance with an embodiment, said handpiece 67 comprises a plurality of heads.

[00199]. Advantageously, said heads comprise piezoelectric heads. Preferably, said heads comprise PZT heads.

[00200]. In accordance with an embodiment, said ultrasound generator is programmed so as to continuously vary (sweeping) the base frequency in a range adjustable around the predetermined operating frequency, for example with a range variation of ± 1 KHz or preferably of a range of ± 0.5 KHz.

[00201]. The use of low-frequency ultrasounds, when applied by a head positioned on the zone affected for example by cellulite, causes an induced heat in the fat, which generates effects similar to the radiofrequency, even though less strong. In addition, however, it causes (unlike the radiofrequency) the fat melting due to the "cavitation effect".

[00202]. The waves absorbed by fat at first produce an

action of compression of the fatty cells in the positive half-wave and a decompression in the subsequent negative half-wave. In the decompression step, vacuum bubbles (cavitations) are formed, which are instantaneously filled (implode) in the following compression step, thus developing a pressure calculated of about 1,000 bar. Fat is thus broken (based on power) with the escape of the interstitial liquids (also due to the effect of heat caused by the mechanical vibrations of ultrasounds).

[00203]. The PZT elements (piezoelectric elements made of materials highly suitable for the purpose, such as lead and barium zirconates and titanate) may be more than two, and even though they are constructed with the utmost accuracy, so as to all be the same to have the same resonance frequency, in the practice they are never identical, thus obtaining that every element measured at the bench has its own resonance that may differ even by 500-600 Hz from each other. If the generator operated at a fixed frequency, several PZT elements would not operate and all the power supplied would remain to some piezoelectric heads, which would soon deteriorate. For this reason, the generator is programmed so as to continuously vary (sweeping) the base frequency in an adjustable range (for example 1,000 Hz), also adjusting

the time for a variation cycle. In this way, all the PZT elements operate evenly at their resonance frequency, thus enhancing the power yield of the entire set and distributing the load evenly on all the elements (figure 21).

[00204]. In accordance with an embodiment, said handpiece 67 is a plate suitable for adhering to the derma, for example, said handpiece is an adhesive plate.

[00205]. In accordance with an embodiment, said hyperthermy inducing means 5 comprise at the same time plates 52 suitable for producing a radiofrequency field on at least a portion of the at least one part of the body supported by the footboard, infrared emitting plates or handpieces 66 and ultrasound emitting plates or handpieces 67.

[00206]. The present invention also relates to a memory card 7 for storing a strategy of application of an apparatus 1 according on said at least one part of the body.

[00207]. In accordance with an embodiment, memory card 7 comprises a rewritable chip suitable for storing over time the information relating to the strategy of application of an apparatus 1 on said at least one part of the body.

[00208]. Below is a method of application of the

apparatus described above.

[00209]. Said body treatment method comprises the steps of:

[00210]. - providing one of the apparatuses described above;

[00211]. - supporting at least a part of body with said footboard 3;

[00212]. - stimulating said at least one part of the body with an oscillatory action suitable for varying the effect of the gravitational action on said at least one part of the body;

[00213]. - applying said hyperthermy inducing means 5 to the same at least one portion of said at least one part of the body supported by said footboard;

[00214]. - concurrently with said oscillatory action, inducing a hyperthermy action on said at least one portion of said at least one part of the body.

[00215]. In accordance with an embodiment, a method provides for the step of using cosmetic products concurrently to the use of the hyperthermy inducing means 5.

[00216]. Advantageously, a method provides for the use of cosmetic products arranged in the areas of application of the hyperthermy inducing means 5.

[00217]. With further advantage, a method provides for the step of using drugs concurrently to the use of the hyperthermy inducing means 5.

[00218]. Below are the main active principles usable as cosmetic products in combination with the application of the apparatus, in particular in the portions of body wherein the hyperthermy inducing means are applied.

[00219]. For cellulite it is possible to use: L-Carnitine, escin, dentella Asiatica, Cuscus, Hammamelis, Organic Silicon or also oak extracts, horse-chestnut and seaweeds; Caffeine.

[00220]. A possible cosmetic product usable in combination with the apparatus consists of phospholipidic soy microspheres contained therein active principles of Escin, L-Creatinine, Glycerine FU, copolymers with a lubricating action, partly salified glycolic acid and carboxyethylcellulose.

[00221]. Escin is a natural mixture of saponins contained in conker (horse chestnut). Since it has an anti-oedematous and anti-inflammatory action, it is especially indicated for the treatment of cellulite, of greasy skins and for weary limbs. In fact, it is capable of increasing the plasmatic flow and normalising the exchange of extracellular liquids in the connective tissue, acting on

the permeability of the cellular membrane. In this way, the cutaneous exchanges and the elimination of the water retained and of metabolic scoriae are accelerated.

[00222]. This active principle, combined with liposomes, allows the skin to regain its tonicity: the cutaneous fibres, made more elastic by the action of liposomes, can facilitate the action of Escin in the removal of fat accumulations.

[00223]. L-Carnitine is a long known substance found in animal tissues, whose function was unknown until it was discovered that it has a stimulating effect on the oxidation of fatty acids carried out by mitochondria.

[00224]. Thus, L-Carnitine, an essential factor in the oxidation of fatty acids, for its positive effects on the metabolism of the muscular tissue, is used in medicine in the treatment of myocardial ischemia. It is also used as stimulant in the gastric secretion.

[00225]. These properties are used in dermocosmesis as a bio-stimulating and regenerating factor. L-Carnitine, in fact, stimulates the freeing of fatty acids carried by lipoproteins and aids the extraction of lipids contained in the fatty tissue.

[00226]. For wrinkles it is possible to use: Ameliox, Argireline, Hyaluronic acid, Collagen, Elastin, Vitamin E,

β-Glucan Acetyl Hexapeptide-3, Vitamin C.

[00227]. For toning it is possible to use: Hyaluronic acid and Fleboside; Hyaluronic acid and Carnitine; Hyaluronic acid and Creatine; Hyaluronic acid and Biochetasi.

[00228]. As regards the pharmaceutical specialties usable in combination with the apparatus, below are some examples.

[00229]. In the case of physiotherapy applications: Tantum, Muscoril, Tioscina, Reumaflex, Lasonil, Orudis, Artrosilene, Feldene, Reumaflex, Jaloronidasi, Novocaina, reumacort, Flectadol.

[00230]. In the case of pain treatment: vitamin c + ASA+pancreatine+NTF

[00231]. In the case of cellulite: Acetylsalicylic, teophylline, pancreatine, caffeine and balance of mucopolyssaccharidosis.

[00232]. In the case of breast toning: tannin+caffein+vitamin C+creatine.

[00233]. The apparatus object of the invention allows, through vibrations or mechanical oscillations, obtaining a series of benefits on an individual or a portion thereof, located thereon, such as by way of a non-exhaustive example, toning of specific muscular masses, body

modelling, reactivation of the venous-lymphatic circulation, reactivation of micro-circulation, relaxation, bone recalcification. At the same time, the machine delivers radiofrequency energy which, through some plates connected to the machine by cables, and applied to specific areas, allows increasing the temperature of the sub-cutaneous tissues, even of the deep ones, for various medical-aesthetic treatments, such as the dissolution of cellulite, with consequent improvement of the skin tissue, or for physiotherapy and osteo-articular applications. The machine thus consists of two sections integrated to one another, which produce a particular synergic effect:

[00234]. 1. a footboard that vibrates vertically or oscillates relative to the horizontal, by the action of the motors located for example thereunder, at a predetermined frequency adjustable for example from 15 to 70 Hz, settable by the operator based on the application purpose. Other parameters may be set before the start, such as operating, pause and total time, as well as the vibration or oscillation intensity;

[00235]. 2. an electromagnetic radiofrequency energy generator, for example operating in the range 100 Khz - 6 Mhz. Energy is transferred to the desired zone of the portion of body supported by the footboard through plates

connected to a generator by cables. The operator places the several plates on various zones, and through the electronic management the apparatus sets the operating parameters, which may be the wave frequency, the independently adjustable power for each pair of plates or channel, the action, pause or total time. The plates, two per each channel, may have the same shape and size or they may be different, moreover they may be electrically insulated through insulating coating, for example of the Teflon™ type, or they may be electrically conductive, and for example be of metal or silicone rubber, with or without adhesive conductive gel for facilitating the electrical conduction.

[00236]. If the plates are of electrically conductive material, a resistive effect will occur, that is, the radiofrequency energy changes into heat in the tissues for the resistance opposed by the tissues to the passage of electrical current from one electrode to the other. In this way, the radiofrequency energy penetrates deeply in the tissues.

[00237]. If the plates are electrically insulated, a capacitive effect will occur, that is, in the tissues there will be induced heat, and therefore a warming at a depth variable from a few millimetres to some centimetres.

[00238]. A temperature sensor incorporated in the plates allows measuring the induced heat, thus safely controlling the treatment, avoiding excessive and harmful warming of the tissues.

[00239]. Therefore, the combination of shape, size, material of the plates, when applied to the human body, produces different therapeutical and aesthetic effects, since the heat in the tissues can only be caused on the tissue concerned by the treatment that is simultaneously subject to vibration induced by the footboard.

[00240]. It has been proved that when conductive plates having the same shape and size are applied in contraposition on zones of the body, for example inner and outer thigh, evenly warming the fatty tissue (an even electrical field is created), the escape of a liquid from the fatty cells is obtained that thanks to the concurrent effect of the vibrating footboard is quickly and concurrently removed by the increased circulation, with consequent quick reduction of swelling and volume thereof.

[00241]. It has also been proved that if one of the two plates is larger, electrically conductive, is applied to the buttocks, while the other, smaller, of circular shape, electrically insulated, is applied to the face, it is possible to increase the temperature of the sub-cutaneous

face tissue which at the same time is subject to the vibration of the vibrating footboard, so as to also obtain a natural production of collagen (generally about 42 °C), with consequent attenuation of wrinkles and better relaxation of the skin.

[00242]. Moreover, it has been proved that if the larger plate is applied to the hand, perhaps of cylindrical shape so that the patient can hold it with his/her hand, and the other smaller one, electrically insulated and made adhesive, if applied on an articular zone suffering from arthrosis, with concurrent application of vibration by the vibrating footboard, pain is reduced, the removal of waste substances is accelerated, the metabolism increases with consequent increase of the oxygen demand and nourishment, like the production of catabolites and metabolites increases.

[00243]. Thanks to the vertical column integral or not to the base, it is possible to protect and carry the at least one electronic board with the microprocessor for the management of the entire apparatus, the power board of the vibrating base, the power board of radiofrequency (and/or infrareds and/or ultrasounds), the power supply board (Figure 12).

[00244]. The machine management is carried out by

software that allows the manual input of the parameters, or the selection among a predetermined number of programs already stored, which allow the user to carry out an articulated series of exercises differing in the variability of the settable parameters. The software allows managing a memory card reading and writing unit, in order to store data for the customisation of treatments, and for the machine rental management.

[00245]. A display shows not only the parameter values or the selected program but also highlights the position the user must take during the activity, the muscles involved in the exercise, the indication of the position of application of the energy, for example radiofrequency, emitting plates.

[00246]. On the column sides or frontally there are distributed the sockets relating to the generator output channels, for example in radiofrequency. These sockets will be connected to the electrical cables that transfer the energy from the generator to the zone where the plates will be applied.

[00247]. Below is an example of prototype apparatus used for carrying out the tests whose results were reported above.

[00248]. The main technical data of this prototype

apparatus are:

[00249]. Display on an LCD graphical display, with microprocessor control, or colour display.

[00250]. Oscillation width of the footboard: 3 mm +/- 2 mm , adjustable on the motor.

[00251]. Frequency of the footboard oscillations: 20 to 60 Hz, in steps of 5.

[00252]. Partial footboard vibration time: 30 to 60 sec in steps of 5.

[00253]. Total footboard vibration time: 5 to 30 min in steps of 1 (control on the sum of partial times without pauses).

[00254]. Radiofrequency energy emission interval: 100 KHz - 6 MHz.

[00255]. Output channels: 4

[00256]. Console with cross keyboard, arrows and central Start/Stop key. Enter/Ready keys (for memory cards), Mode Manual and Mode Program keys, Pause key, Power ON/OFF key to switch the display on and off and keep the machine in stand by.

[00257]. Memory card chip reading and writing device, for storing the apparatus parameters.

[00258]. Remote control for starting and stopping the machine when laying.

[00259]. Back master switch.

[00260]. Power supply: 100/230V ac.

[00261]. The initial screen displays the Company's logo, the machine name, the welcome, as well as the language selection (for example IT, UK, ES, PO, FR, DE).

[00262]. In the following line: Service on the left and Operate on the right.

[00263]. Service Menu

[00264]. Pressing Service displays general information, software release, total operating hours, and password to access the factory settings, like the possibility of setting the machine up only to be used through memory card.

[00265]. Operate Menu

[00266]. Pressing Operate displays the operating screen: here you can decide whether to work in Manual or Program Mode. The specific Manual Mode and Program Mode keys allow the selection.

[00267]. Manual Operating Mode

[00268]. In this operating mode it is possible to manually set the partial and total time and the footboard frequency. Moreover, it is possible to scroll and select one of the images indicating the position to take to stimulate muscular fasciae that are indicated on the human

body image. There are 45 positions, for example as depicted in figures 22, 23 and 24. Then, the screens will highlight the graphics of the position the user must take based on the selected image (of which the name and progressive number are shown), the front and back human body image with the concerned muscles highlighted, the relevant parameters that are total and partial time, frequency, number of sessions to make. Moreover, it is possible to set the number of weeks over which the treatments are to be carried out and the weekly frequency.

[00269]. Such data may be stored to a memory card. When the memory card is introduced, the reading device will read the data and will also indicate the number of remaining sessions as compared to the total number set. The session will be deducted as a new session is started. It will end at the end of the last session. The card may be programmed again.

[00270]. Program (or AUTO) Operating Mode

[00271]. In this operating mode it is possible to choose between three groups of programs, that are:

[00272]. Fitness Programs Group

[00273]. Relax Programs Group

[00274]. Aesthetic Programs Group

[00275]. Each group includes a certain number of programs

(about 10-15 per group) that will differ by position to take, zone involved, partial and total time, frequency, total number of sessions, weeks and weekly frequency.

[00276]. In the various programs, the sessions consist of an overall time (for example 30 minutes). The vibrating footboard for example starts for 40 seconds, then stops for example for 10 seconds, the image changes with the new position to take as well as that of the human body with other involved muscles indicated, and then it restarts on, for example for 40 seconds more, and so on.

[00277]. If the program is set for 10 minutes, this means the sum of vibration + pause minutes, that is, the total time required to carry out the entire program.

[00278]. The use of the memory card would also allow managing the machine in rental, that is, selling a memory card to a use centre with a program stored thereon, with for example 100 treatments pre-loaded (each treatment for ten minutes of vibration each).

[00279]. Then, in the technical menu, by a password it is possible to access a submenu wherein, among the other things, it is possible to select the machine in rental mode, that is, operating through memory card only.

[00280]. Example of screen: besides indicating the parameters set or the selected program, the image of the

position to take and the stylised image with the muscular group concerned are displayed.

[00281]. Example of plate position and application: plate dimensions: 150x100 mm, or circular, 20 mm, for face applications, up to 100 mm.

[00282]. The therapeutical and aesthetic effects produced by the heat induced by the hyperthermy inducing means, both by capacitive and resistive effect, are made really effective, enhanced and intensified by the vibrating action of the footboard.

[00283]. The muscles, when warmed by radiofrequency (and/or by infrareds and/or ultrasounds) contract with more intensity and power, and thus greater muscular toning, firming and strengthening are obtained.

[00284]. The vibratory movement transferred to the face zones, when warmed, produces a concurrent toning and firming of the face skin tissues, since the cutaneous muscles contract more easily and with greater intensity.

[00285]. The sub-cutaneous warming of the face, consequent to the induced heat up to a temperature of for example about 42° C, causes a natural production of collagen by the organism, which attenuates wrinkles.

[00286]. The heat induced by radiofrequency and/or infrareds and/or ultrasounds forces the lipidic panel to

eliminate the intracellular liquid to compensate the thermal action.

[00287]. The liquid that has escaped from the fatty tissue cells by the effect of the induced heat is then removed and quickly moved away from the zone concerned, since the mechanical vibrations of the footboard, by causing an active contraction of the muscles, cause an effective venous-lymphatic drainage, and a reactivation of micro-circulation, which also in the following days completes the elimination of the intracellular liquid. Moreover, the muscular contractions produce testosterone, which is a hormone that inhibits the formation of fatty tissue.

[00288]. The fatty cells therefore remain flat, with a consequent reduction of the fatty tissue for a long time.

[00289]. To better enhance the treatment results, it is possible to use cosmetic or medical substances containing active principles effective for the desired treatment, to put in the form of gel or creams on the plates, or distributed on the zone concerned as oil. Specific cosmetic and medical products can be used right after the treatment, which will be immediately and totally absorbed by the effect of the intense hyperaemia generated.

[00290]. The concurrent action of the hyperthermy

inducing means and of the vibrating footboard produces higher effects than those obtainable by using of only one of these means individually or by using both but in a sequence.

[00291]. The hyperthermy inducing means produce induced heat in the human body tissues.

[00292]. According to the modes of application of the plates and to the materials of which they can be made, and to their position on the zone to be treated, as well as the radio frequency used and the usage times, the apparatus can be used effectively in physiotherapy for various treatments, such as arthrosis, contusions, sprained muscles, etc. In the aesthetic field, and in particular on the fatty tissue, it causes the escape of intracellular liquids, by reaction to the intense heat induced, but such effect does not last too long since the fatty tissue acts as a sponge, that is, it tends to quickly reabsorb most of such liquids (cellulite = dimensional increase of the fatty cells, for the difficulty of eliminating such liquids). The effect of radiofrequency applied to the fatty tissue is not very effective, since by itself it cannot eliminate such liquids through the venous-lymphatic pathways. The application of a massage subsequent to the application of

radiofrequency, given the long times required, unavoidably gives only partial results.

[00293]. The simultaneous use of the vibrating footboard, besides enhancing the effects produced by radiofrequency, produces therapeutical and aesthetic effects on the human body.

[00294]. For example, these effects can be the increase of bone calcification, muscular strengthening, toning, firming, with consequent increase of the testosterone hormone production, the venous-lymphatic drainage, the reactivation of the arterial micro-circulation. In particular, the two latter effects, in the medical-aesthetic field, can contribute to the reduction of the fatty tissue, if this is stimulated and forced to emit the intracellular liquid with the application of the hyperthermy inducing means.

[00295]. The combined and concurrent action of the hyperthermy inducing means and of the vibrating footboard produces exceptional results both in physiotherapy and above all, in medical and aesthetic applications.

[00296]. In particular, in the medical-aesthetic field, the intracellular liquids escaped from the fatty cells by the effect of heat, caused by radiofrequency (and/or by infrareds and/or by ultrasounds) and of the muscular

squeezing surrounding the fatty tissue caused by the vibrating footboard can be removed and moved away as they form through the venous-lymphatic pathway, which activates intensely with the intense muscular contractions caused by the footboard. If previously and constantly warmed, the muscles contract more powerfully, thus enhancing this combined effect.

[00297]. Moreover, the vibratory movement transferred to the face tissues, when this is warmed by plates connected to the radiofrequency generator, produces a concurrent toning and firming of the skin tissues, since the cutaneous muscles contract more easily and with greater intensity. There will thus occur a reduction of wrinkles by the natural production of collagen consequent to heat, and a relaxation and toning of the tissues consequent to the vibratory action.

[00298]. Advantageously, the use of thermal sensors connected to the plates, when these are arranged on the body zone concerned, allow obtaining a safe temperature control on the skin, thus avoiding excessive dispensing of heat that could even cause damages, further allowing a continuous monitoring by an operator.

[00299]. The onscreen display of the positions that the end user must take while performing the program prevents

the operator from being present during the entire treatment, while the onscreen display of the plate position facilitates and helps the operator during the user preparation step.

[00300]. The possibility of adjusting the footboard vertical raiding level and the vibration width according to the treatment purpose allows a considerable variability of applications.

[00301]. The use of adhesive plates for dispensing the radiofrequency or infrareds or ultrasounds to the various parts of the body or, alternatively, suits, also sectorial, containing the plates, while the vibrating footboard is operating, makes the use of the apparatus even more convenient and effective.

[00302]. In the aesthetic and physiotherapy field, to better adjust the penetration depth of the induced heat, it is possible to adopt a multifrequency generator, so that the operator can select each time the most appropriate frequency for the treatment according to the needs.

[00303]. The use of a chip card reader/writer on board of the machine on which a user's parameters as well as the treatments carried out and to be carried out can be transferred, makes the use of the apparatus even more

convenient and effective.

[00304]. The use of chip cards is useful since it allows selling the memory cards on which a desired treatment program is stored, thus making the machine free to be used by anyone, if used in a largely crowded context, such as shopping centres, barracks, sports clubs, etc.

[00305]. EXAMPLE OF APPLICATION METHODOLOGY

[00306]. The operator decides the program to follow with the user, then the muscles to be treated or the therapeutical or aesthetic treatment to be adopted; then, he/she sets the specific parameters or selects an already stored work program.

[00307]. He/she cleans the body zone concerned in the radiofrequency action and applies the adhesive plates or the suits containing the plates thereon.

[00308]. If the effect to be adopted is the capacitive one, on the insulated active electrode it is possible to apply cosmetic products or drugs containing active principles suitable for the selected treatment, and which are quickly absorbed both for the micro-circulation reactivation and for the vasodilatation consequent to the induced heat.

[00309]. If, on the other hand, the selected effect is resistive, it is possible to use adhesive gels on both

plates, also containing active principles useful for the treatment.

[00310]. According to the selected program, the screen will display the position on the human body on which the plates or the suits containing the plates are to be applied, the position that the user must take about every minute, and the indication of the number of sessions to be carried out.

[00311]. At the end of the session, the parameters selected and set are saved to the chip card, so that at the next treatment, the user is autonomous in the continuation of the treatment.

[00312]. On an average, 10-15 sessions are carried out, with a frequency of at least two a week, preferably on a daily basis. The sessions on the average last 10-15 min.

[00313]. A man skilled in the art may make several changes, adjustments and replacements of elements with other functionally equivalent ones to the preferred embodiment of the device described above, in order to meet specific and incidental needs, without departing from the scope of the following claims.

CLAIMS

1. A body treatment apparatus comprising:

- a support structure;

- at least one footboard hanging on said support structure so as to allow at least an oscillatory movement thereof in the direction of the gravitational action;

- said footboard being suitable for supporting at least a part of body to be treated;

- means for stressing said footboard with an oscillation in the direction of the gravitational action, so that on at least said part of the body supported by said footboard, an action is determined suitable for varying the effect of the gravitational action on said at least one part of the body;

characterised in that the apparatus further comprises

- means for inducing onto the same at least one part of the body supported by said footboard an action suitable for determining a hyperthermy in at least a portion of said at least one part of the body;

- control and actuation means that actuate and control at least the concurrent operation of said means for stressing the footboard and said hyperthermy inducing means suitable for warming in a controlled manner the at least one portion of said at least one part of the body oscillating

on the footboard.

2. An apparatus according to claim 1, wherein said support structure comprises a base.

3. An apparatus according to claim 1 or 2, wherein said support structure comprises a base resting on anti-vibration means that interpose between said base and a base for the apparatus so as to isolate said apparatus from said base.

4. An apparatus according to any one of the previous claims, wherein said support structure comprises a post suitable for containing at least partly said actuation and control means.

5. An apparatus according to any one of the previous claims, wherein said actuation and control means comprise a transformer suitable for connecting said means to the power supply network.

6. An apparatus according to any one of the previous claims, wherein said actuation and control means comprise at least one control driver for the footboard stressing means.

7. An apparatus according to any one of the previous claims, wherein said actuation and control means comprise control means for at least one control driver for the footboard stressing means.

8. An apparatus according to any one of the previous claims, wherein said actuation and control means comprise a control of at least one control driver for the footboard stressing means so as to control in open loop the footboard oscillation frequency.

9. An apparatus according to any one of the previous claims, wherein said actuation and control means comprise a control of at least one control driver for the footboard stressing means fed back so as to control in closed loop the footboard oscillation frequency.

10. An apparatus according to any one of the previous claims, wherein the footboard oscillation frequency is adjustable between 15 Hz and 70 Hz.

11. An apparatus according to any one of the previous claims, wherein the footboard oscillation frequency is adjustable between 20 Hz and 60 Hz.

12. An apparatus according to any one of the previous claims, wherein said actuation and control means comprise a control of at least one control driver for the footboard stressing means so as to control in open loop the footboard oscillation width.

13. An apparatus according to any one of the previous claims, wherein said actuation and control means comprise a control of at least one control driver for the footboard

stressing means fed back so as to control in closed loop the footboard oscillation width.

14. An apparatus according to any one of the previous claims, wherein the footboard oscillation width is adjustable between 1 mm and 5 mm.

15. An apparatus according to any one of the previous claims, wherein the footboard oscillation width is adjustable between 2 mm and 5 mm.

16. An apparatus according to any one of the previous claims, wherein said actuation and control means comprise a control of at least one control driver for the footboard stressing means so as to control in open loop the footboard oscillation time.

17. An apparatus according to any one of the previous claims, wherein said actuation and control means comprise a control of at least one control driver for the footboard stressing means fed back so as to control in closed loop the footboard oscillation time.

18. An apparatus according to any one of the previous claims, wherein the footboard oscillation time is adjustable between 30 seconds and 60 seconds.

19. An apparatus according to any one of the previous claims, wherein the footboard oscillation time is adjustable in intervals.

20. An apparatus according to any one of the previous claims, wherein the footboard oscillation time is adjustable in a plurality of intervals.

21. An apparatus according to any one of the previous claims, wherein the footboard oscillation time is adjustable in 5 intervals.

22. An apparatus according to any one of the previous claims, wherein said footboard stressing means comprise at least one rotor comprising an eccentric mass.

23. An apparatus according to any one of the previous claims, wherein said footboard stressing means comprise at least one rotor comprising an eccentric mass of predetermined weight.

24. An apparatus according to any one of the previous claims, wherein said footboard stressing means comprise at least one rotor comprising an eccentric mass of predetermined eccentricity.

25. An apparatus according to any one of the previous claims, wherein said footboard stressing means comprise at least two rotors comprising eccentric masses.

26. An apparatus according to any one of the previous claims, wherein said footboard stressing means comprise at least two rotors comprising counter-rotating eccentric masses.

27. An apparatus according to any one of the previous claims, wherein said footboard stressing means comprise at least two rotors with parallel rotation axes comprising eccentric masses.

28. An apparatus according to any one of the previous claims, wherein said footboard stressing means comprise at least two rotors with parallel rotation axes comprising counter-rotating eccentric masses.

29. An apparatus according to any one of the previous claims, wherein said footboard stressing means comprise at least one rotor keyed to an electric motor.

30. An apparatus according to any one of the previous claims, wherein said footboard stressing means comprise at least one rotor keyed to a pneumatic motor.

31. An apparatus according to any one of the previous claims, wherein said stressing means stress the footboard with an oscillation of predetermined frequency.

32. An apparatus according to any one of the previous claims, wherein said stressing means stress the footboard with an oscillation of frequency variable between 15 Hz and 70 Hz.

33. An apparatus according to any one of the previous claims, wherein said stressing means stress the footboard with an oscillation of frequency variable between 20 Hz

and 60 Hz.

34. An apparatus according to any one of the previous claims, wherein said stressing means stress the footboard with an oscillation of predetermined width.

35. An apparatus according to any one of the previous claims, wherein said stressing means stress the footboard with an oscillation of width variable between 1 mm and 7 mm.

36. An apparatus according to any one of the previous claims, wherein said stressing means stress the footboard with an oscillation of width variable between 2 mm and 5 mm.

37. An apparatus according to any one of the previous claims, wherein said stressing means stress the footboard with an oscillation of predetermined time.

38. An apparatus according to any one of the previous claims, wherein said stressing means stress the footboard with an oscillation of time variable between 30 seconds and 60 seconds.

39. An apparatus according to any one of the previous claims, wherein said stressing means stress the footboard with an oscillation applied at intervals.

40. An apparatus according to any one of the previous claims, wherein said stressing means stress the footboard

with an oscillation applied at more intervals of predetermined time.

41. An apparatus according to any one of the previous claims, wherein said stressing means stress the footboard with an oscillation applied at 5 intervals of predetermined time.

42. An apparatus according to any one of the previous claims, wherein said stressing means are connected to said hanging footboard.

43. An apparatus according to any one of the previous claims, wherein said stressing means comprise a motor connected to said hanging footboard.

44. An apparatus according to any one of the previous claims, wherein said hanging footboard comprises a connecting plate having a bottom surface.

45. An apparatus according to any one of the previous claims, wherein said stressing means are connected to the bottom surface of the connecting plate.

46. An apparatus according to any one of the previous claims, wherein the motor comprises a casing fixed to the bottom surface of the connecting plate.

47. An apparatus according to any one of the previous claims, wherein said stressing means comprise two motors connected to the bottom surface of the connecting plate so

as to have the rotor axes parallel to each other.

48. An apparatus according to any one of the previous claims, wherein a connecting plate is sized so as to transmit the stress transmitted by the stressing means to the entire top surface thereof.

49. An apparatus according to any one of the previous claims, wherein a stiffening frame is provided for reinforcing the connecting plate.

50. An apparatus according to any one of the previous claims, wherein the footboard comprises a resting structure.

51. An apparatus according to any one of the previous claims, wherein said resting structure exhibits an upturned cup shape.

52. An apparatus according to any one of the previous claims, wherein said resting structure is fitted on a connecting plate.

53. An apparatus according to any one of the previous claims, wherein a non-slip mat is arranged on the resting structure.

54. An apparatus according to any one of the previous claims, wherein the footboard is constantly elastically stressed to be hung on the support structure free to oscillate in the direction of the gravitational action.

55. An apparatus according to any one of the previous claims, wherein the footboard is hung to the support structure by elastic support elements.

56. An apparatus according to any one of the previous claims, wherein elastic support elements elastically influence the footboard in inclined direction relative to the direction of the gravitational action.

57. An apparatus according to any one of the previous claims, wherein there is provided a plurality of elastic support elements directed so as to influence the footboard according to action directions converging in a point.

58. An apparatus according to any one of the previous claims, wherein the convergence point of the actions of the plurality of elastic elements is located on a line perpendicular to the resting surface of the footboard.

59. An apparatus according to any one of the previous claims, wherein said perpendicular passes by the barycentre and/or the centre of the footboard.

60. An apparatus according to any one of the previous claims, wherein the convergence point is located at a distance from the footboard equal to the substantial theoretical position of the barycentre of the portion of body or of the body subject to treatment.

61. An apparatus according to any one of the previous

claims, wherein the elastic elements comprise at least one spring.

62. An apparatus according to any one of the previous claims, wherein said spring is buried or embedded in an elastic material, preferably synthetic.

63. An apparatus according to any one of the previous claims, wherein hooking and guiding elements are arranged at the ends of the at least one spring.

64. An apparatus according to any one of the previous claims, wherein bushes exhibit a first fixing end and a second end provided with seat for seating and guiding the end of the spring.

65. An apparatus according to any one of the previous claims, wherein the fixing end is provided with an inclined resting and support surface.

66. An apparatus according to any one of the previous claims, wherein said support structure comprises a post.

67. An apparatus according to any one of the previous claims, wherein the post is fixed by a bottom end thereof to the base.

68. An apparatus according to any one of the previous claims, wherein the post comprises a box-shaped structure.

69. An apparatus according to any one of the previous claims, wherein in the box-shaped structure of the post

there are seated the means for commanding and controlling the footboard stressing means.

70. An apparatus according to any one of the previous claims, wherein in the box-shaped structure there are seated the means for commanding and controlling the hyperthermy inducing means.

71. An apparatus according to any one of the previous claims, wherein the post comprises a control unit for the means for commanding and controlling the footboard and the hyperthermy inducing means.

72. An apparatus according to any one of the previous claims, wherein the control unit comprises at least one operating console for controlling and displaying the operating parameters of the footboard and the hyperthermy inducing means.

73. An apparatus according to any one of the previous claims, wherein the control unit comprises at least two operating consoles for controlling and displaying the operating parameters of the footboard and the hyperthermy inducing means.

74. An apparatus according to any one of the previous claims, wherein the control unit comprises at least one screen for controlling and displaying the operating parameters of the footboard and the hyperthermy inducing

means.

75. An apparatus according to any one of the previous claims, wherein the control unit comprises two screens.

76. An apparatus according to any one of the previous claims, wherein a first screen is suitable for displaying the operating parameters of the footboard along with the postures for the proper use of the apparatus.

77. An apparatus according to any one of the previous claims, wherein a screen is suitable for displaying the proper position of the hyperthermy inducing means.

78. An apparatus according to any one of the previous claims, wherein a screen is suitable for displaying and controlling the operating parameters of the hyperthermy inducing means.

79. An apparatus according to any one of the previous claims, wherein a screen is an LCD display mounted on board of the apparatus or external to the system and of large size.

80. An apparatus according to any one of the previous claims, wherein the column comprises the sockets for connecting the hyperthermy inducing means.

81. An apparatus according to any one of the previous claims, wherein said post supports at least one handle usable for keeping the balance while using the apparatus.

82. An apparatus according to any one of the previous claims, wherein said handle surrounds at least partly the normal use space of the apparatus.

83. An apparatus according to any one of the previous claims, wherein said apparatus further comprises means for storing a strategy of application of said apparatus on said at least one part of the body.

84. An apparatus according to any one of the previous claims, wherein said actuation and control means actuate and control at least the operation of said footboard stressing means based on said strategy of application of said apparatus on said at least one part of the body stored on said storage means.

85. An apparatus according to any one of the previous claims, wherein said actuation and control means actuate and control at least the operation of said hyperthermy inducing means based on said strategy of application of said apparatus on said at least one part of the body stored on said storage means.

86. An apparatus according to any one of the previous claims, wherein said means for storing a strategy of application of said apparatus on said at least one part of the body comprise a unit for writing and reading a memory card.

87. An apparatus according to any one of the previous claims, wherein said memory card comprises a rewritable chip.

88. An apparatus according to any one of the previous claims, wherein there is provided a remote control for actuating and/or programming the apparatus.

89. An apparatus according to any one of the previous claims, wherein the hyperthermy inducing means comprise at least one handpiece applicable to the at least one part of the portion of body supported by the footboard.

90. An apparatus according to any one of the previous claims, wherein said at least one handpiece comprises a plate suitable for being applied to the at least one part of the portion of body supported by the footboard.

91. An apparatus according to any one of the previous claims, wherein there is provided at least one adhesive plate.

92. An apparatus according to any one of the previous claims, wherein said at least one plate is associated to a suit suitable for being fitted at least on the at least one part of the portion of body supported by the footboard.

93. An apparatus according to any one of the previous claims, wherein said hyperthermy inducing means comprise

at least one pair of plates suitable for transmitting electromagnetic energy.

94. An apparatus according to any one of the previous claims, wherein said hyperthermy inducing means comprise at least one electromagnetic energy generator.

95. An apparatus according to any one of the previous claims, wherein said hyperthermy inducing means comprise at least one pair of plates suitable for transmitting a radiofrequency field.

96. An apparatus according to any one of the previous claims, wherein said hyperthermy inducing means comprise at least one radiofrequency field generator.

97. An apparatus according to any one of the previous claims, wherein said pair of plates generates a predetermined radiofrequency field suitable for penetrating in the tissues of the at least one part of the at least one portion of body supported by the footboard.

98. An apparatus according to any one of the previous claims, wherein said pair of plates generates a predetermined radiofrequency field comprised between 100 KHz and 6 MHz.

99. An apparatus according to any one of the previous claims, wherein said pair of plates generates a predetermined radiofrequency field comprised between 400

KHz and 2 MHz.

100. An apparatus according to any one of the previous claims, wherein said pair of plates generates a radiofrequency field of predetermined power.

101. An apparatus according to any one of the previous claims, wherein said pair of plates generates a radiofrequency field of predetermined power comprised between 10 W and 300 W.

102. An apparatus according to any one of the previous claims, wherein said pair of plates generates a radiofrequency field of predetermined frequency and power for determining hyperthermy in the fatty layer of the at least one part of the at least one portion of body supported by the footboard.

103. An apparatus according to any one of the previous claims, wherein said pair of plates generates a radiofrequency field of predetermined frequency and power for determining hyperthermy of 39-48 degrees Celsius in the fatty layer of the at least one part of the at least one portion of body supported by the footboard.

104. An apparatus according to any one of the previous claims, wherein said pair of plates generates a radiofrequency field of predetermined frequency and power for determining hyperthermy of 43 degrees Celsius in the

fatty layer of the at least one part of the at least one portion of body supported by the footboard.

105. An apparatus according to any one of the previous claims, wherein said pair of plates comprises means for the resistive connection to the derma of the portion of body to be treated.

106. An apparatus according to any one of the previous claims, wherein said pair of plates comprises a connecting surface to the derma covered with a conductive material.

107. An apparatus according to any one of the previous claims, wherein said pair of plates comprises means for the capacitive connection to the derma of the portion of body to be treated.

108. An apparatus according to any one of the previous claims, wherein said pair of plates comprises a connecting surface to the derma covered with an insulating material.

109. An apparatus according to any one of the previous claims, wherein said pair of plates exhibits predetermined size.

110. An apparatus according to any one of the previous claims, wherein said pair of plates exhibits a predetermined area of connection to the surface of the at least one part of the at least one portion of body supported by the footboard.

111. An apparatus according to any one of the previous claims, wherein the plates of said pair of plates exhibit the same size.

112. An apparatus according to any one of the previous claims, wherein the plates of said pair of plates exhibit different size.

113. An apparatus according to any one of the previous claims, wherein the hyperthermy inducing means comprise at least one handpiece applicable to the at least one part of the portion of body supported by the footboard comprising at least one temperature sensor suitable for measuring the temperature of said part.

114. An apparatus according to any one of the previous claims, wherein said at least one temperature sensor is connected to the actuation and control means that actuate and control the concurrent operation of the footboard stressing means and the hyperthermy inducing means.

115. An apparatus according to any one of the previous claims, wherein said at least one temperature sensor is fed back to the actuation and control means that actuate and control the concurrent operation of the footboard stressing means and the hyperthermy inducing means for a fed back control at least of the operation of said hyperthermy inducing means.

116. An apparatus according to any one of the previous claims, wherein said at least one temperature sensor is fed back to the actuation and control means comprising means for sensing the temperature reached by the fatty layer of the at least one part of the at least one portion of body supported by the footboard.

117. An apparatus according to any one of the previous claims, wherein said at least one temperature sensor is fed back to the actuation and control means that actuate and control the concurrent operation of the footboard stressing means and the hyperthermy inducing means for a fed back control at least of the frequency of the radiofrequency field.

118. An apparatus according to any one of the previous claims, wherein said at least one temperature sensor is fed back to the actuation and control means that actuate and control the concurrent operation of the footboard stressing means and the hyperthermy inducing means for a fed back control at least of the power of the radiofrequency field.

119. An apparatus according to any one of the previous claims, wherein said at least one temperature sensor is fed back to the actuation and control means that actuate and control the concurrent operation of the footboard

stressing means and the hyperthermy inducing means for a fed back control at least of the footboard operation.

120. An apparatus according to any one of the previous claims, wherein said hyperthermy inducing means comprise at least one handpiece suitable for transmitting infrared energy.

121. An apparatus according to any one of the previous claims, wherein said hyperthermy inducing means comprise at least one infrared energy generator.

122. An apparatus according to any one of the previous claims, wherein said handpiece generates infrared energy with wavelength comprised between 40000 Ångstrom and 3500 Ångstrom.

123. An apparatus according to any one of the previous claims, wherein said handpiece is a plate suitable for adhering to the derma.

124. An apparatus according to any one of the previous claims, wherein said handpiece is an adhesive plate.

125. An apparatus according to any one of the previous claims, wherein said hyperthermy inducing means comprise at least one handpiece suitable for transmitting ultrasounds.

126. An apparatus according to any one of the previous claims, wherein said hyperthermy inducing means comprise

at least one ultrasound generator.

127. An apparatus according to any one of the previous claims, wherein said handpiece generates ultrasounds with predetermined frequency between 30 KHz and 50 KHz or between 800 KHz and 3 MHz.

128. An apparatus according to any one of the previous claims, wherein said handpiece comprises a plurality of heads.

129. An apparatus according to any one of the previous claims, wherein said heads comprise piezoelectric heads.

130. An apparatus according to any one of the previous claims, wherein said heads comprise PZT heads.

131. An apparatus according to any one of the previous claims, wherein said ultrasound generator is programmed so as to continuously vary (sweeping) the base frequency in a range adjustable around the predetermined operating frequency.

132. An apparatus according to any one of the previous claims, wherein said range is of ± 1 KHz.

133. An apparatus according to any one of the previous claims, wherein said range is of ± 0.5 KHz.

134. An apparatus according to any one of the previous claims, wherein said handpiece is a plate suitable for adhering to the derma.

135. An apparatus according to any one of the previous claims, wherein said handpiece is an adhesive plate.

136. An apparatus according to any one of the previous claims, wherein said ultrasound generator is programmed so as to vary the time of a frequency variation cycle (sweeping) so as to effectively excite all the piezoelectric heads.

137. An apparatus according to any one of the previous claims, wherein the hyperthermy inducing means comprise plates suitable for producing a radiofrequency field on at least a portion of the at least one part of the body supported by the footboard, infrared emitting plates or handpieces and ultrasound emitting plates or handpieces.

138. A body treatment apparatus comprising:

- a support structure;
- at least one footboard hanging on said support structure so as to allow at least an oscillatory movement thereof in the direction of the gravitational action;
- said footboard being suitable for supporting at least a part of body to be treated;
- means for stressing said hanging footboard according to an oscillation in the direction of the gravitational action, so that on at least said part of the body supported by said footboard, an action is determined

suitable for varying the effect of the gravitational action on said at least one part of the body;

characterised in that the apparatus further comprises

- means for storing a strategy of application of said apparatus on said at least one part of the body;
- actuation and control means that actuate and control at least the operation of said footboard stressing means based on said strategy of application of said apparatus on said at least one part of the body stored on said storage means.

139. A body treatment apparatus comprising:

- means for inducing on at least one part of the body an action suitable for determining a hyperthermy in at least a portion of said at least one part of the body;
- means for storing a strategy of application of said apparatus on said at least one part of the body;
- control and actuation means that actuate and control at least the operation of said hyperthermy inducing means suitable for warming in a controlled manner the at least one portion of said at least one part of the body;
- said actuation and control means actuate and control at least the operation of said hyperthermy inducing means based on said strategy of application of said apparatus on said at least one part of the body stored on said storage

means.

140. A body treatment method comprising the following steps:

- providing an apparatus according to any one of the previous claims;

- supporting at least a part of body with said footboard;

- stimulating said at least one part of the body with an oscillatory action suitable for varying the effect of the gravitational action on said at least one part of the body;

- applying said hyperthermy inducing means to the same at least one portion of said at least one part of the body supported by said footboard;

- concurrently with said oscillatory action, inducing a hyperthermy action on said at least one portion of said at least one part of the body.

141. A method according to claim 140, wherein there is provided the step of using cosmetic products concurrently to the use of the hyperthermy inducing means.

142. A method according to any one of claims 140 to 141, wherein the cosmetic products are arranged in the areas of application of the hyperthermy inducing means.

143. A method according to any one of claims 140 to 142, wherein there is provided the step of using drugs

concurrently to the use of the hyperthermy inducing means.

144. A memory card for storing a strategy of application of an apparatus according to any one of the previous claims on said at least one part of the body.

145. A memory card according to claim 144, wherein there is comprised a rewritable chip suitable for storing over time the information relating to the strategy of application of an apparatus on said at least one part of the body.

References

1 apparatus

2 support structure

3 footboard

4 stressing means

5 hyperthermy means

6 actuation and control means

7 strategy storing means

8 base of the support structure

9 anti-vibration means

10 post

11 post structure

12 panels

13 frame

14 transformer

15 network

16 footboard control driver

17 footboard control unit

18 rotor

19 eccentric mass

20 electric motor

21 fixing screws

22 connecting plate

23 plate bottom surface

24 seats for screws

25 plate top surface

26 stiffening frame

27 elastic elements

28 resting structure

29 non-slip mat

30 seats for belts

31 belts

32 handles

33 elastic means action convergence point

34 footboard perpendicular line

35 footboard resting surface

36 convergence point footboard distance

37 Spring

38 hooking elements

39 spring fixing end

40 fixing means

41 spring end

42 spring seat

43 inclined surface

44 post bottom end

45 control unit

46 Console

47 hyperthermy console

48 Screen

49 hyperthermy screen

50 sockets for hyperthermy means

51 Handpiece

52 Plate

53 Cable

54 Plugs

55 Handle

56 strategy storing means

57 writing and reading unit

58 Chip

59 Remote control

60 hyperthermy control

61 hyperthermy driver

62 temperature sensor

63 adhesive plate edge

64 fatty layer

65 portion of body

66 infrared handpiece

67 ultrasound handpiece

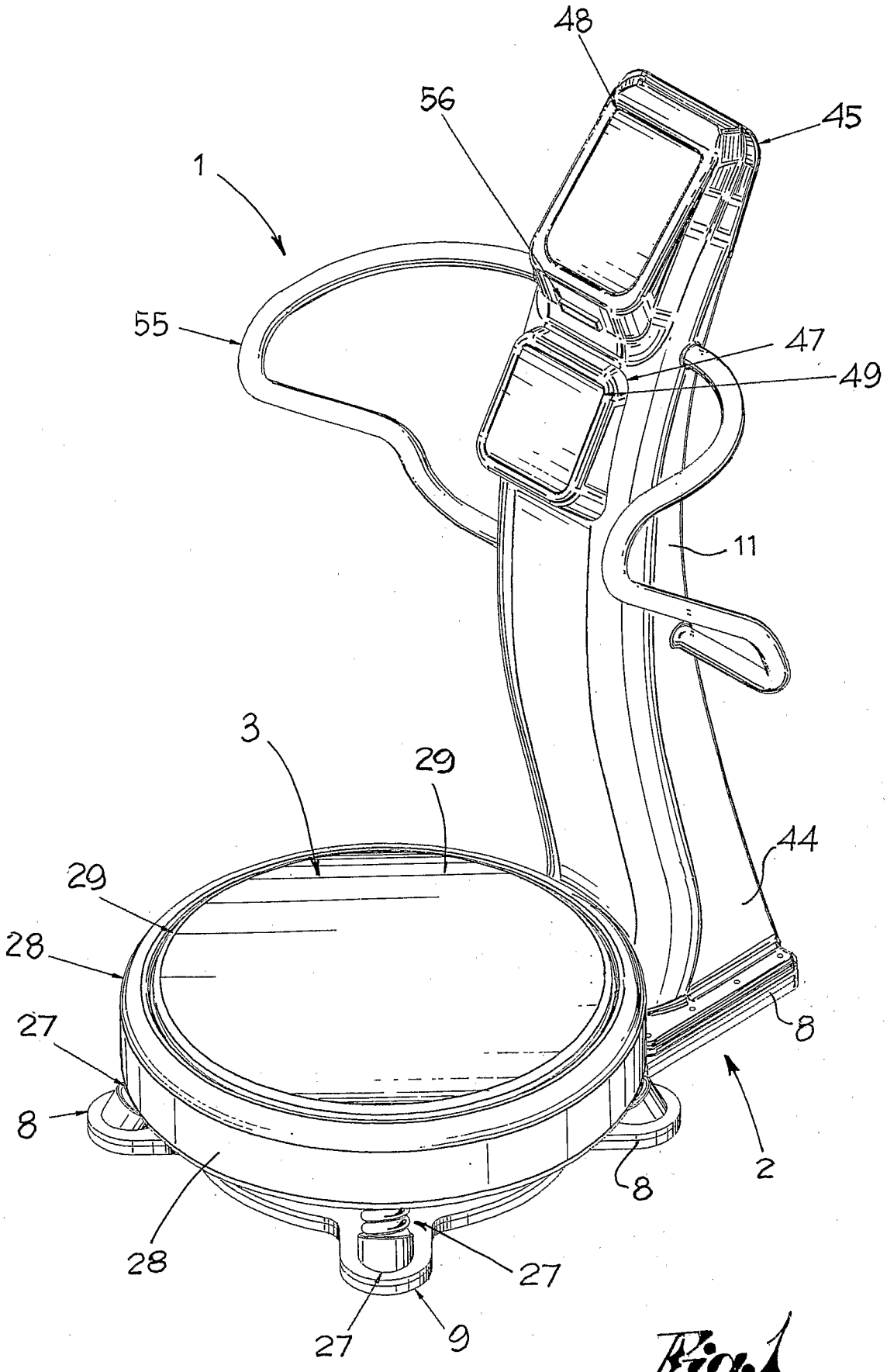

Fig.1

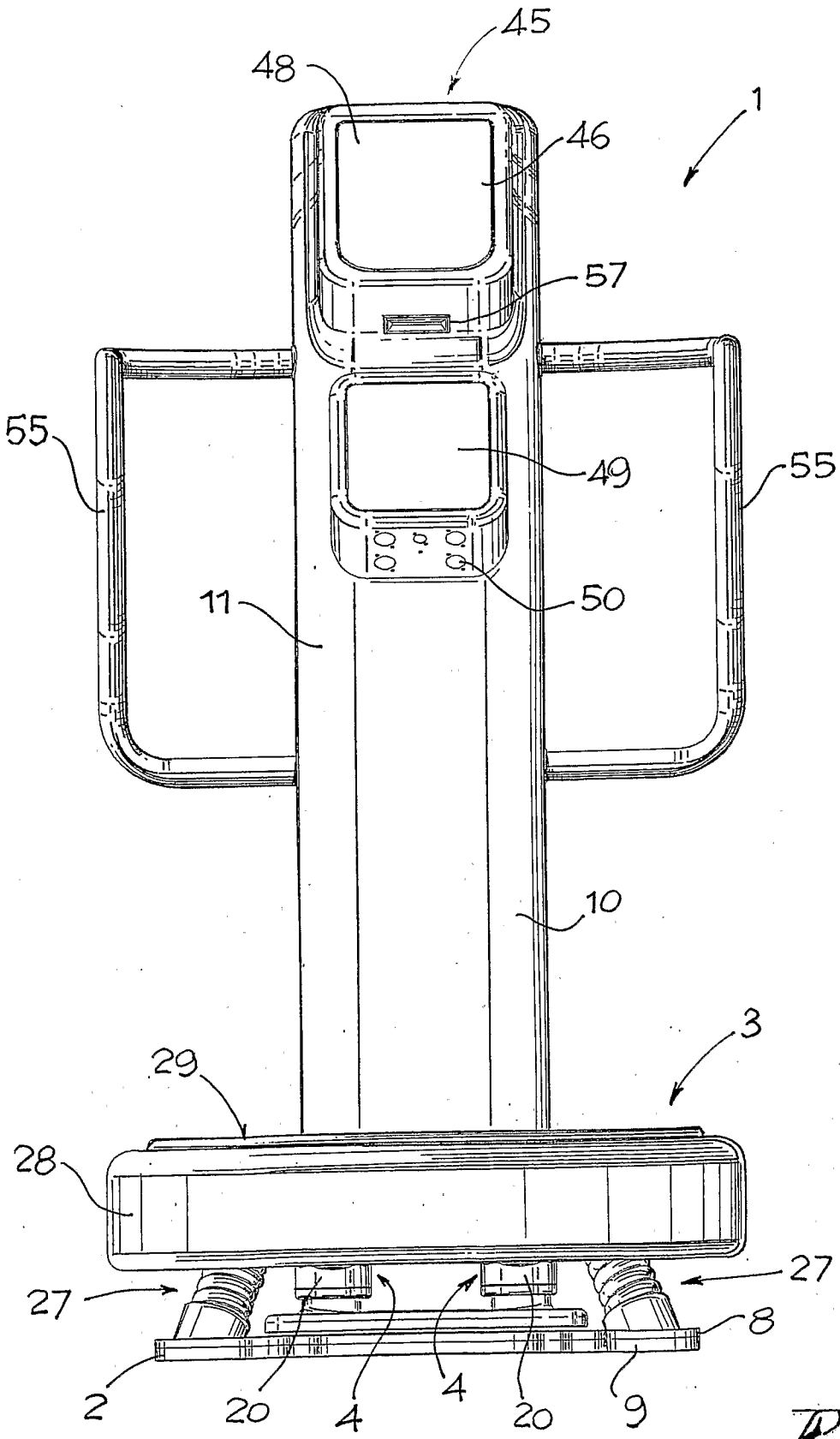

Fig.2

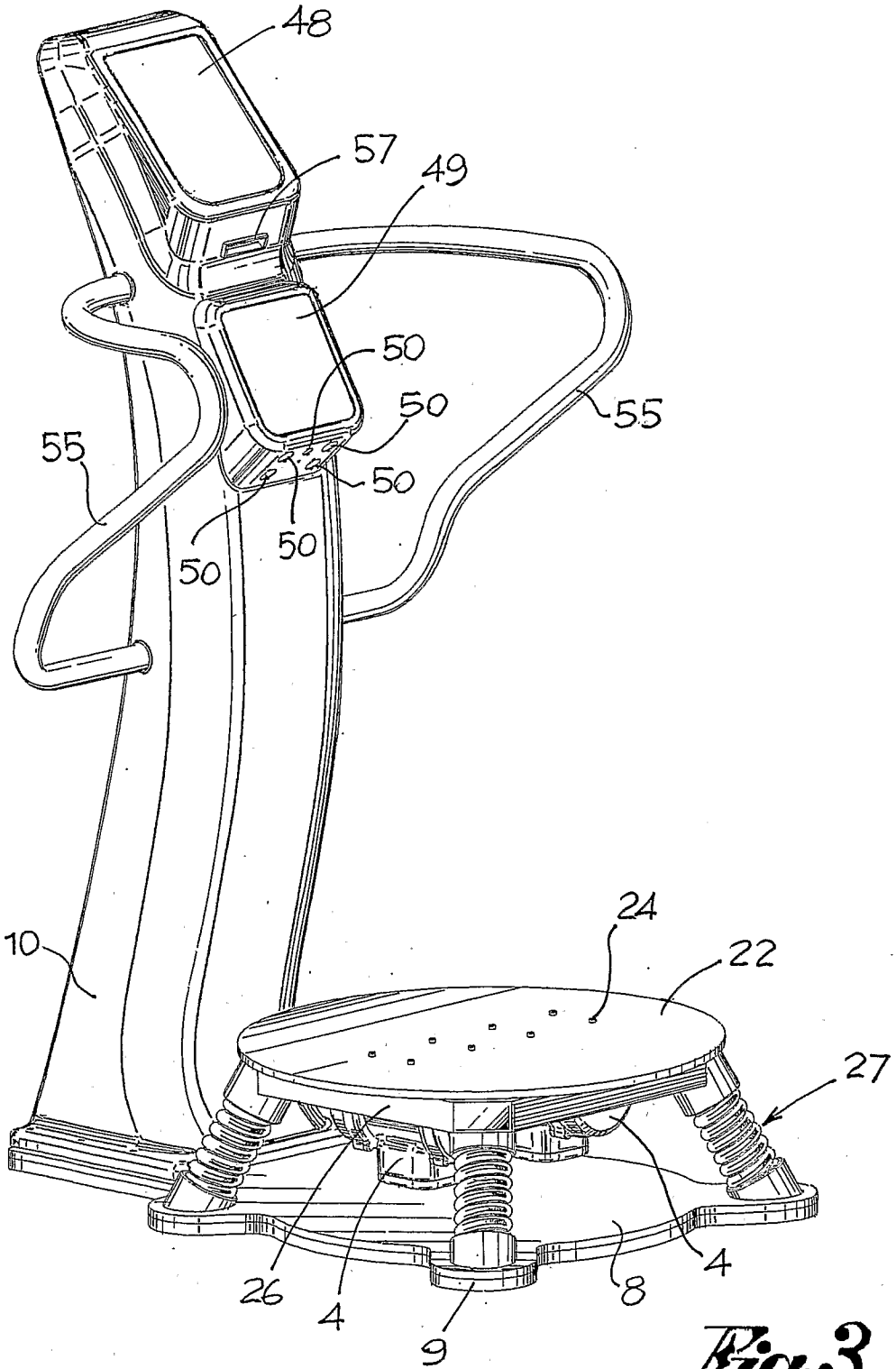

Fig.3

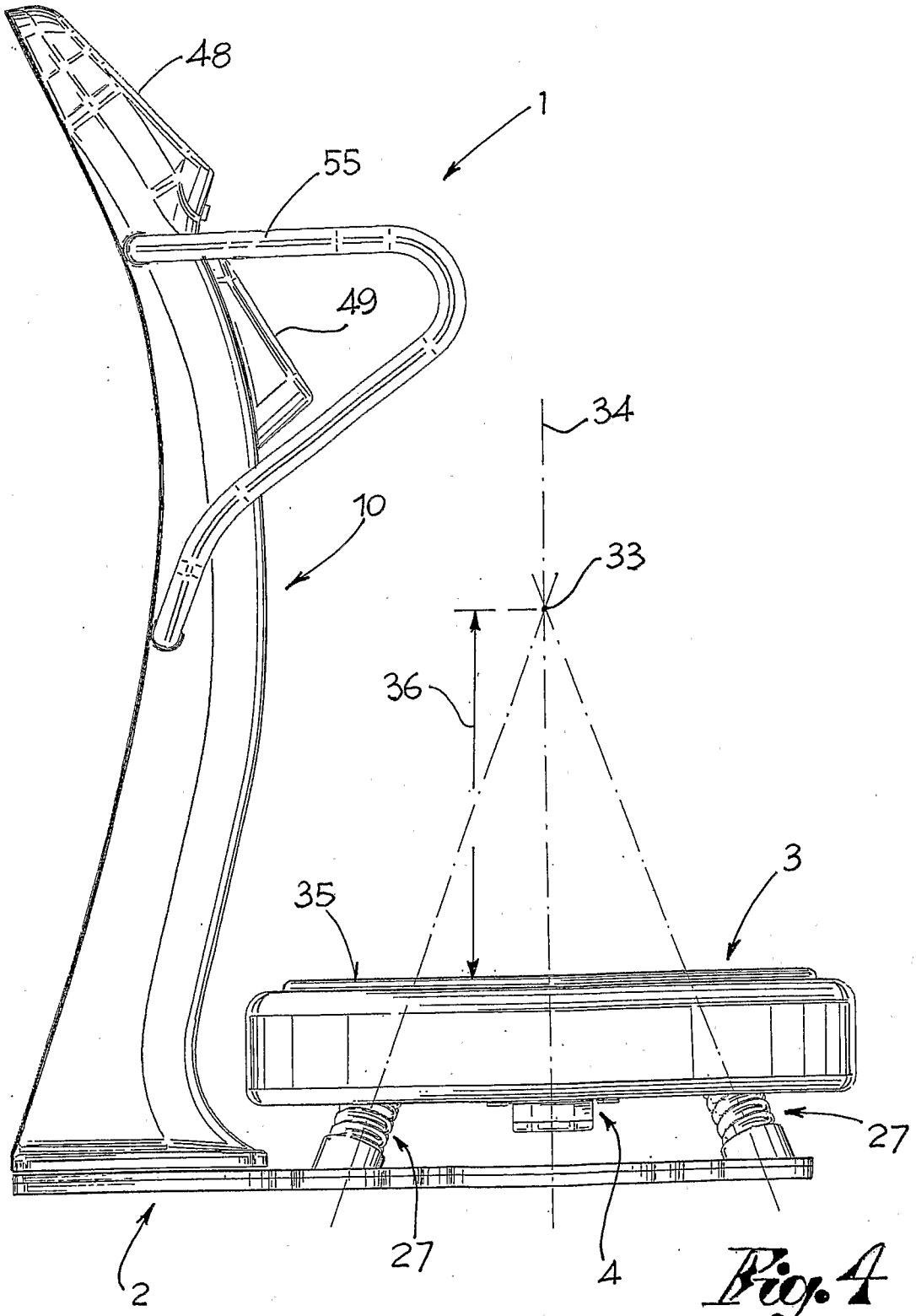

Fig. 4

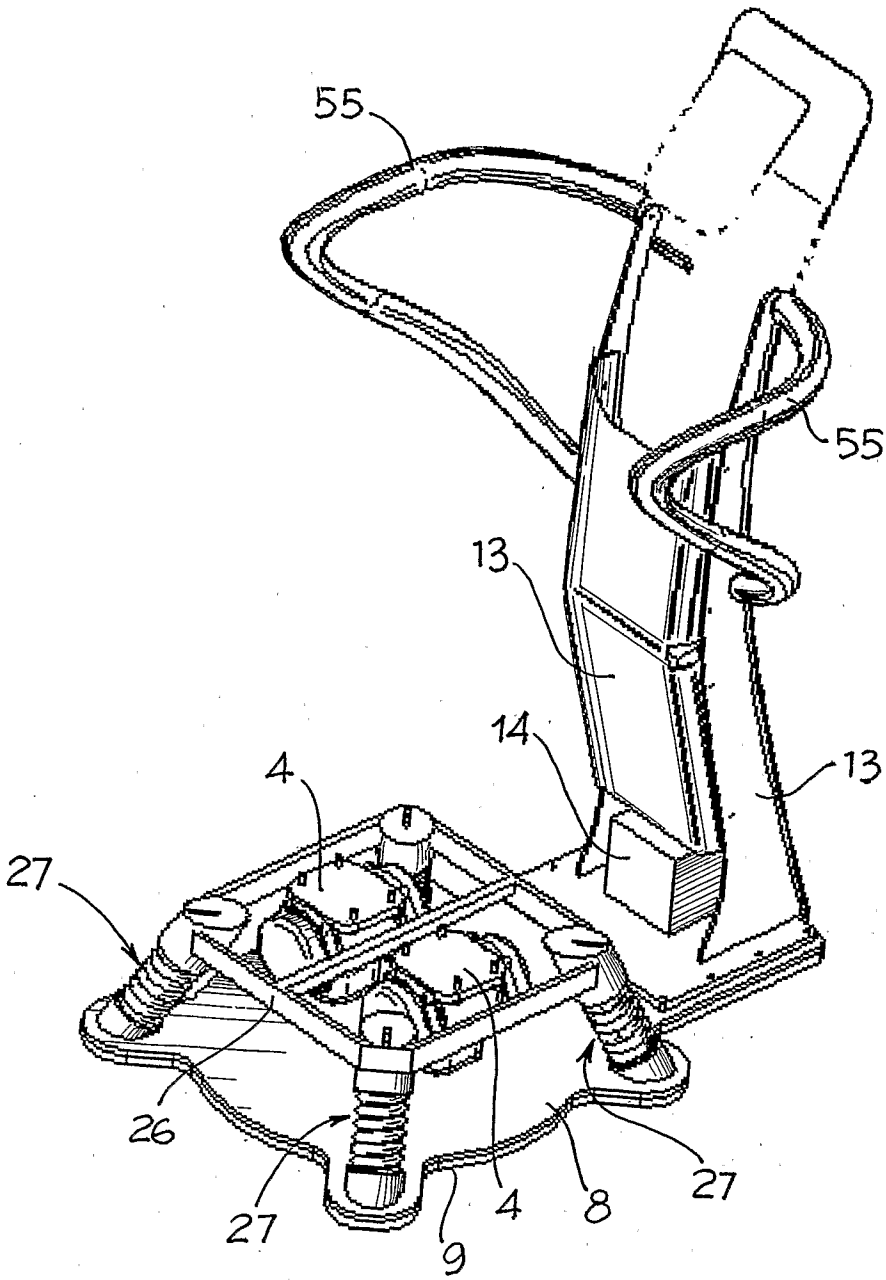

Fig.5

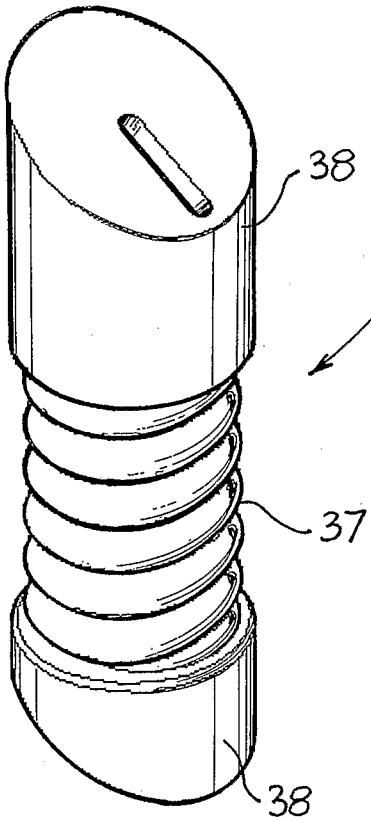

Fig.6

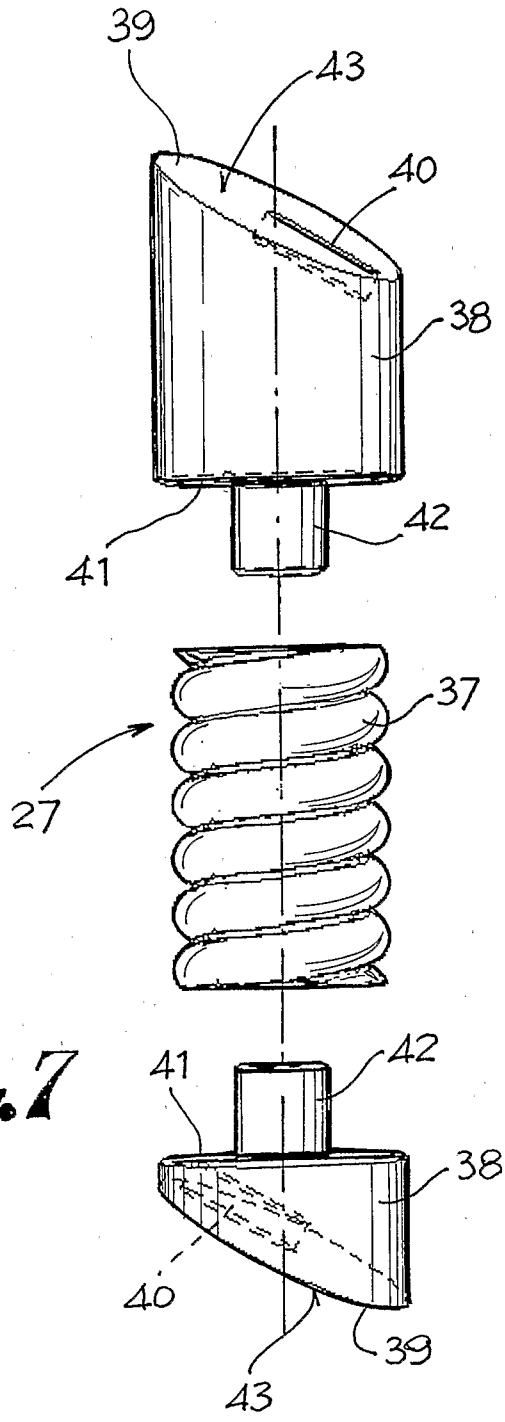

Fig.7

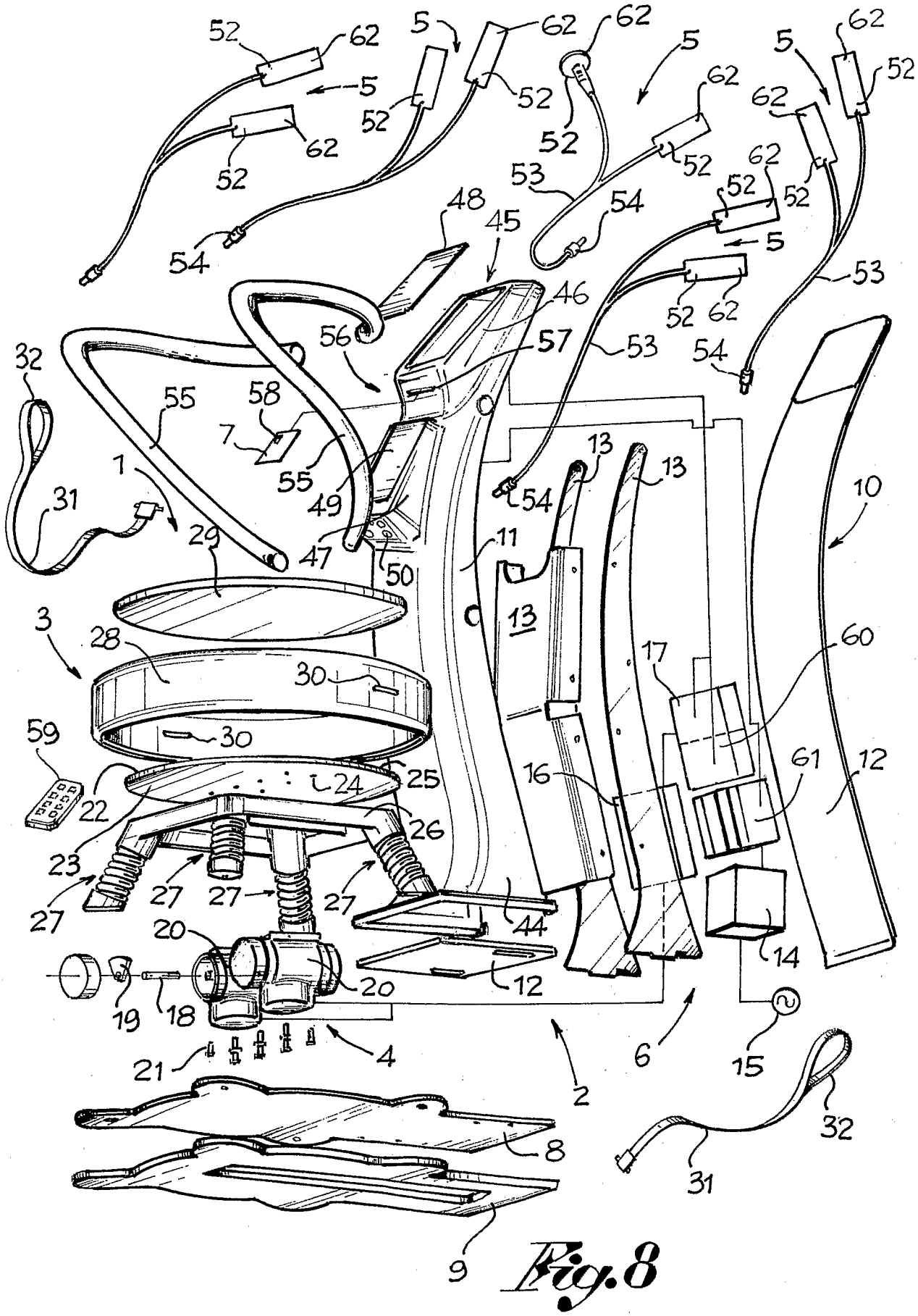
52
62
5
62
62
5
5
62
52
52
52
62
52
62
52
52
62
52
53
54
48
45
54
5
53
46
52
62
56
57
53
54
32
55
58
7
55
49
1
31
29
47
50
11
13
13
54
10
3
28
30
13
17
60
59
30
25
24
16
61
12
22
26
23
27
27
27
27
44
20
20
12
14
19
18
21
4
2
6
15
32
8
31
9

Fig.8

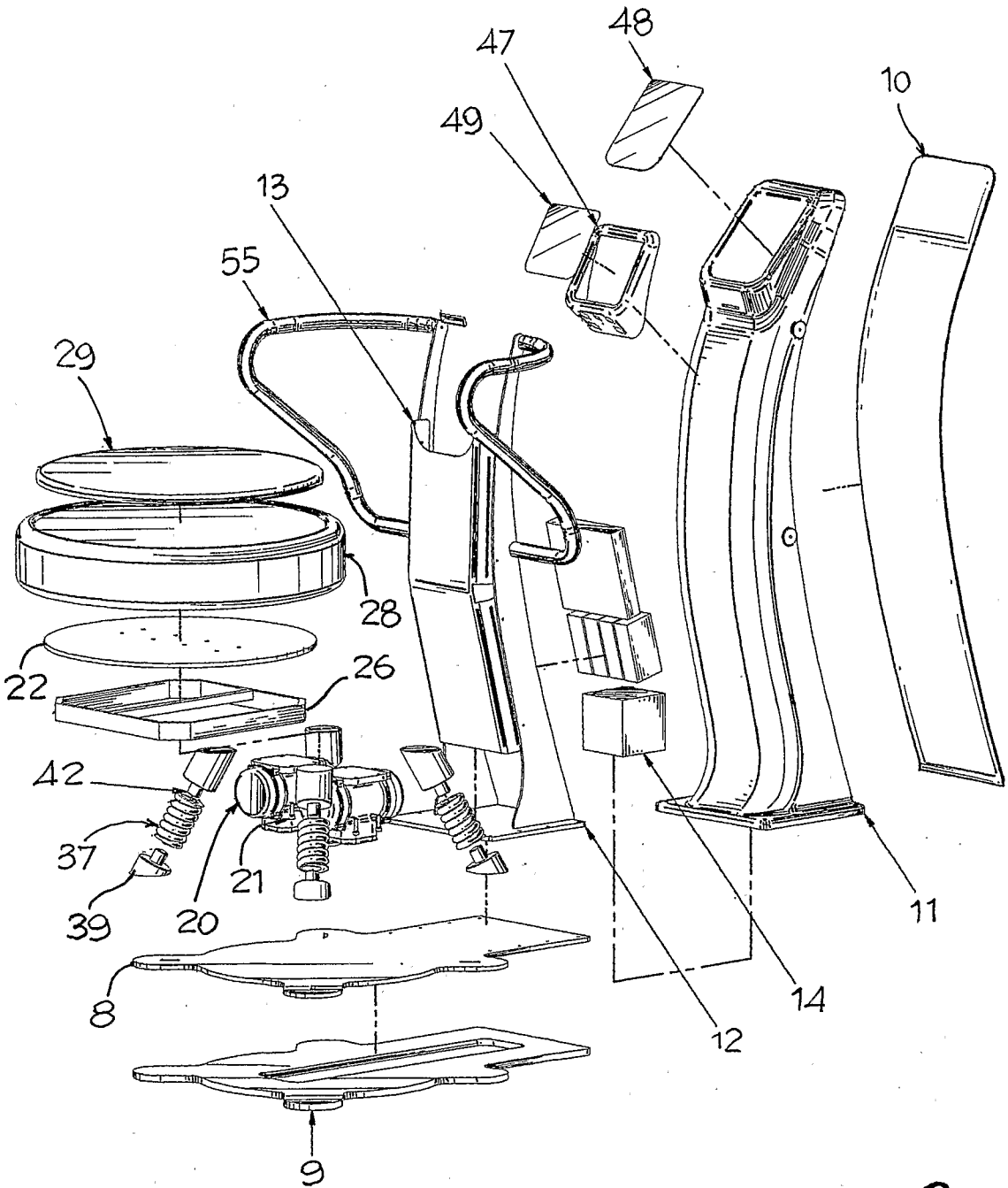

Fig.9

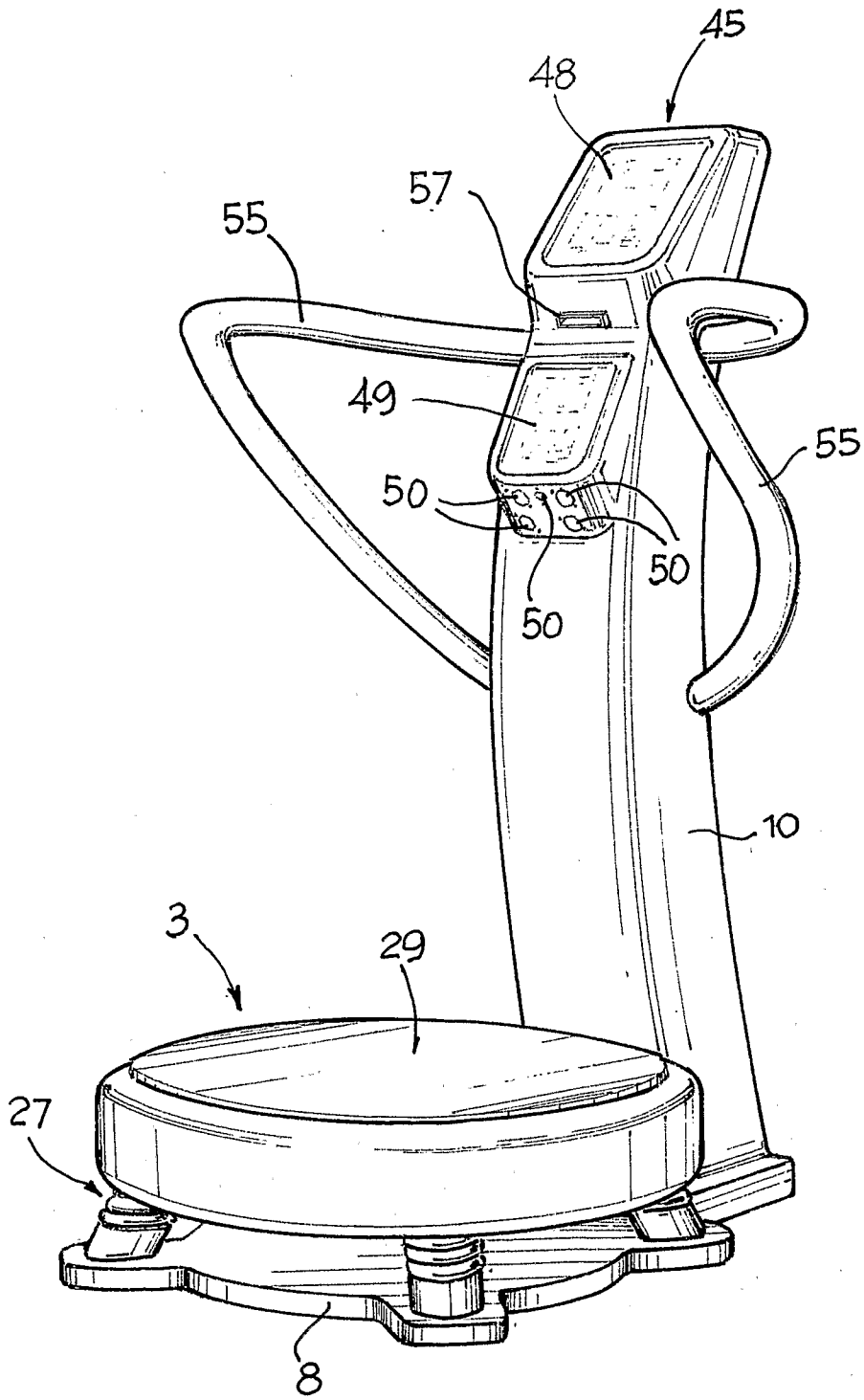

Fig. 10

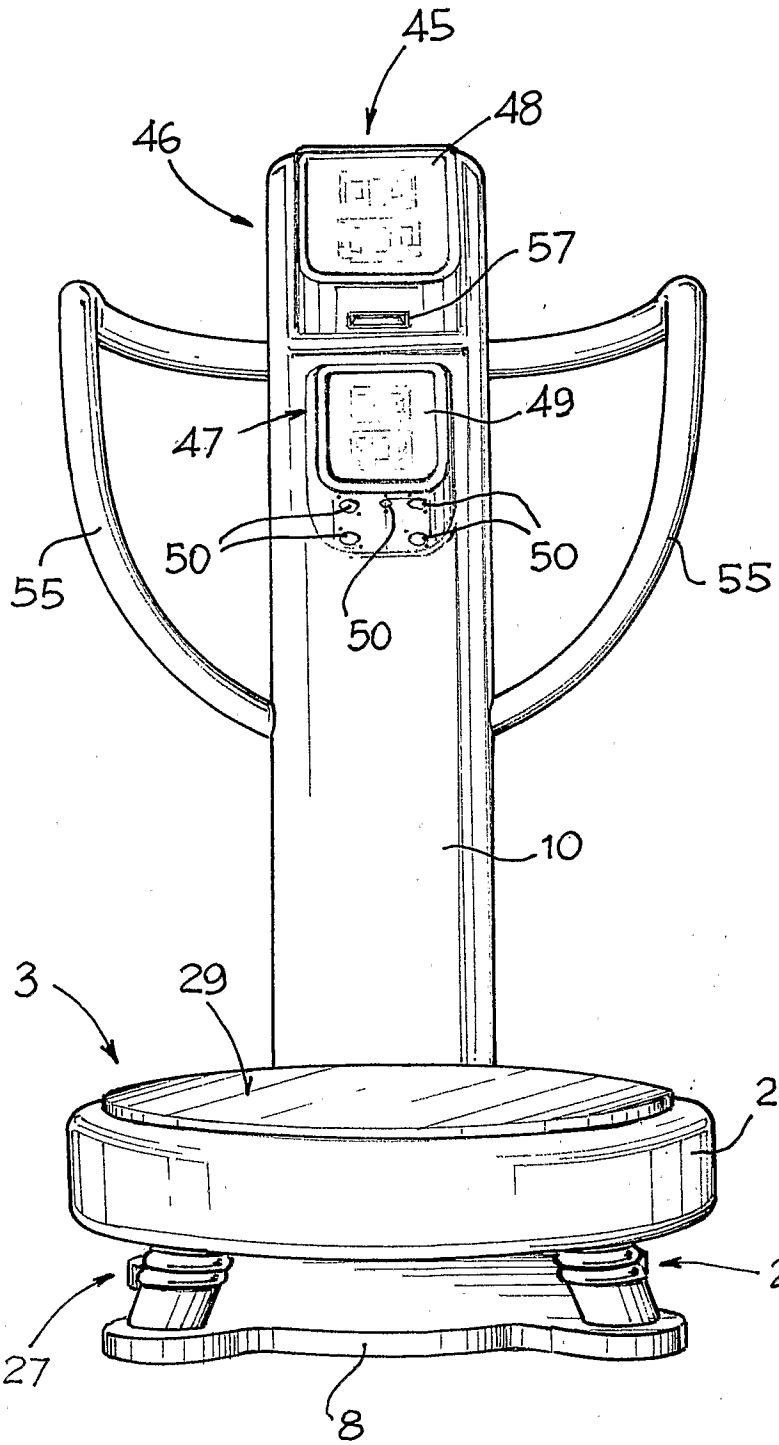

Fig.11

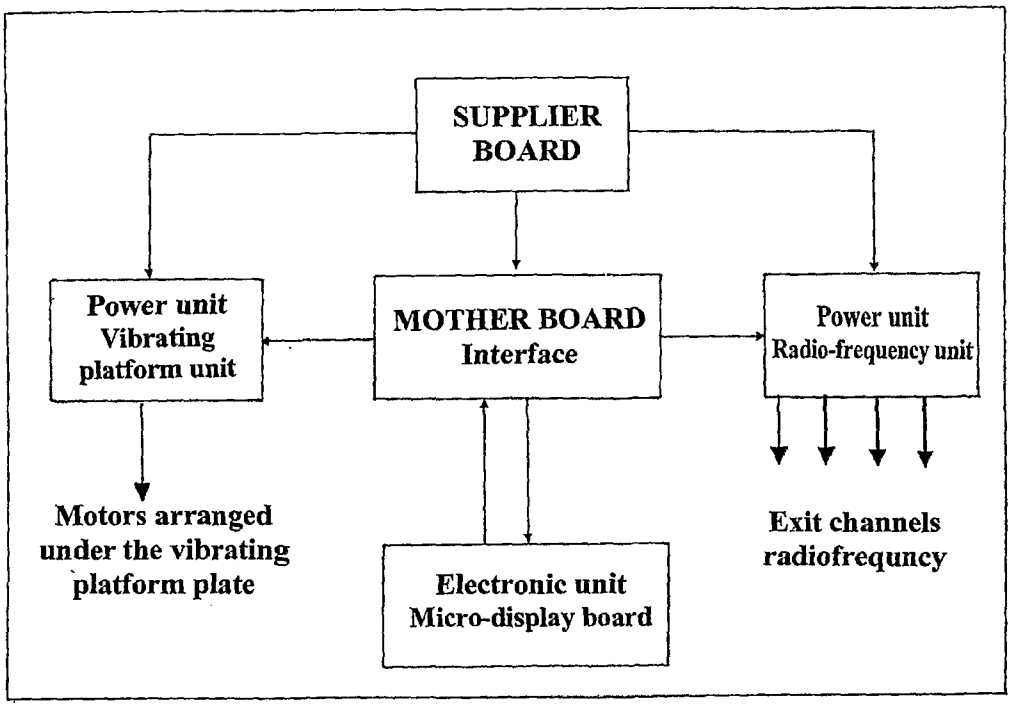
SUPPLIER BOARD
Power unit Vibrating platform unit
MOTHER BOARD Interface
Power unit Radio-frequency unit
Motors arranged under the vibrating platform plate
Electronic unit Micro-display board
Exit channels radiofrequncy

Fig.12

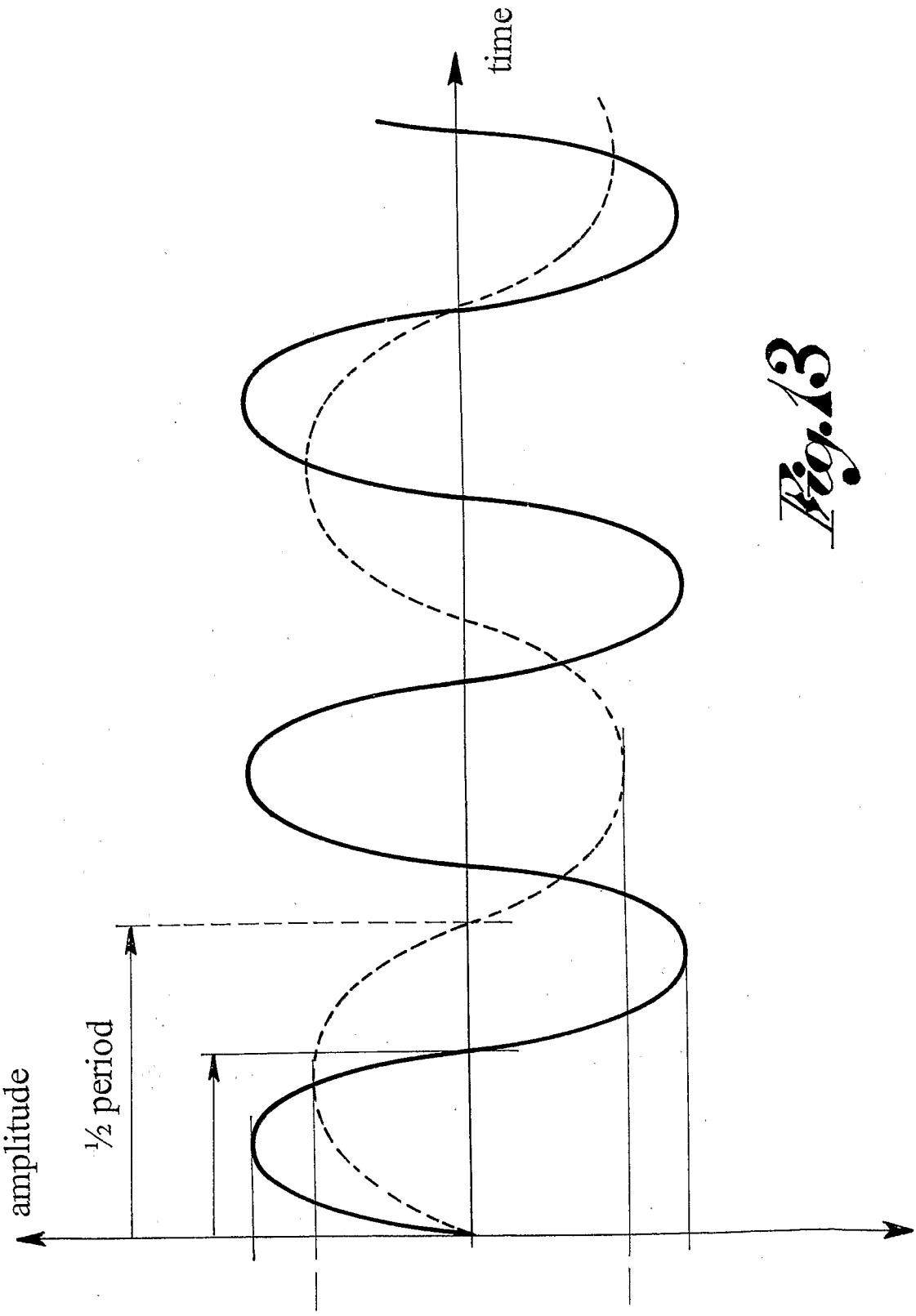

Fig.13

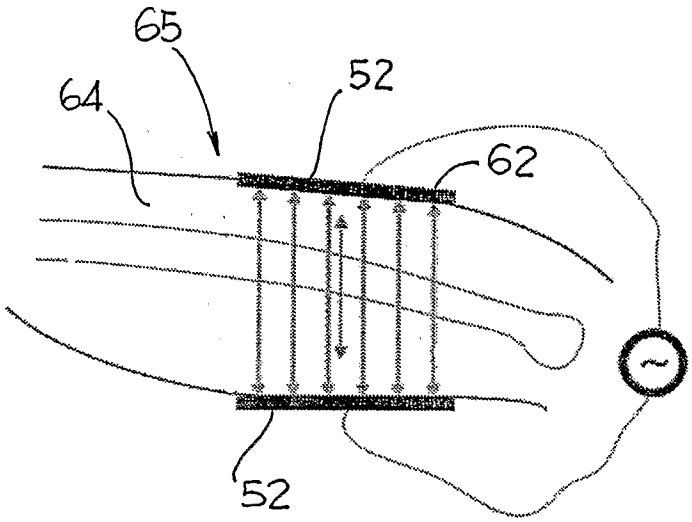

Fig. 14

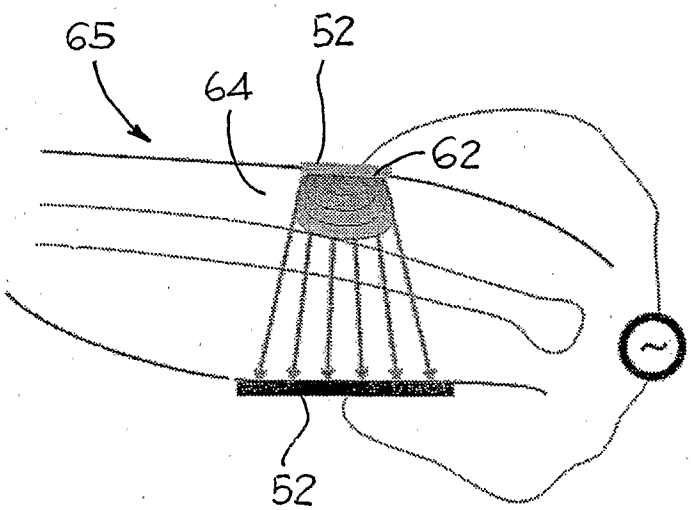

Fig. 15

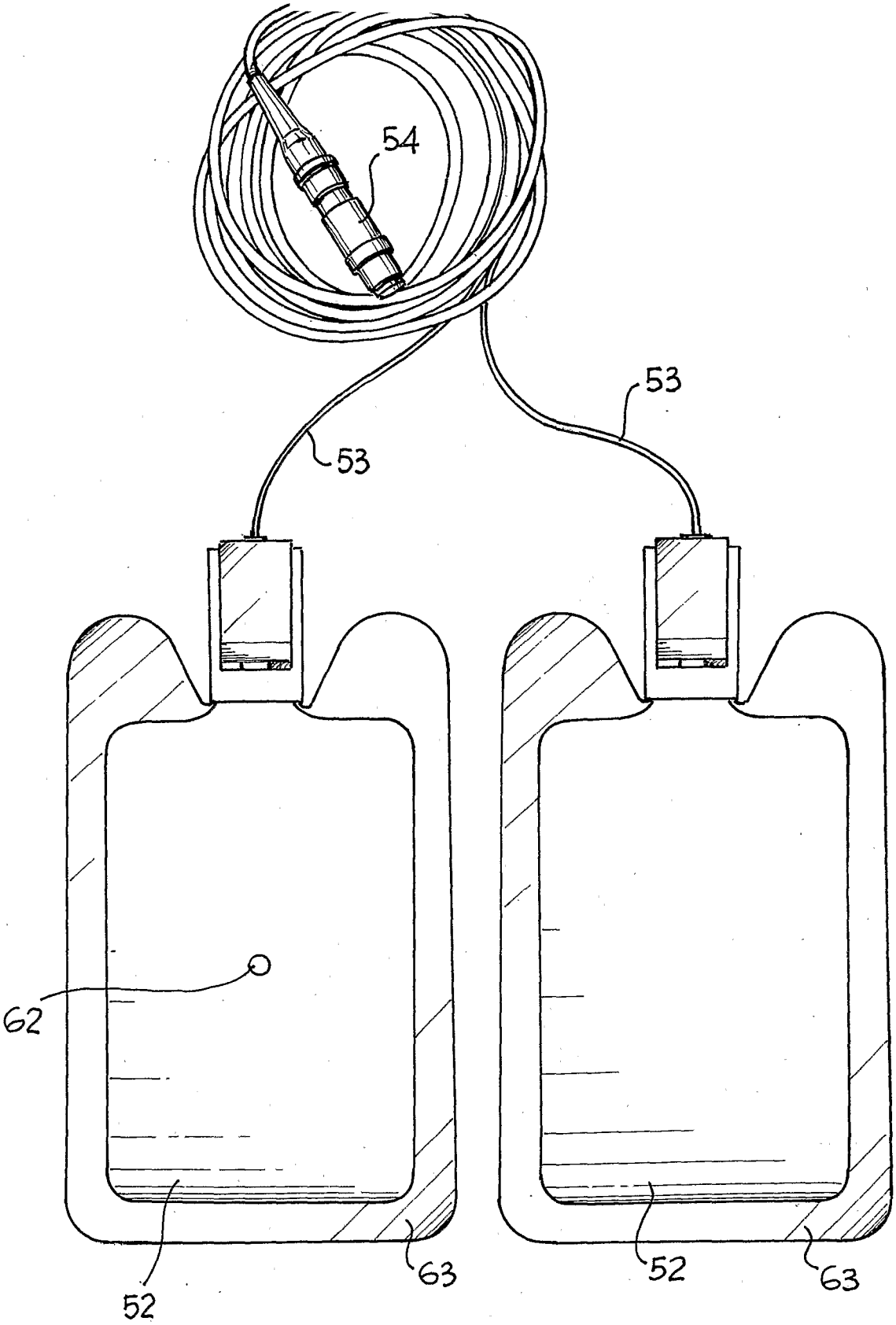

Fig.16

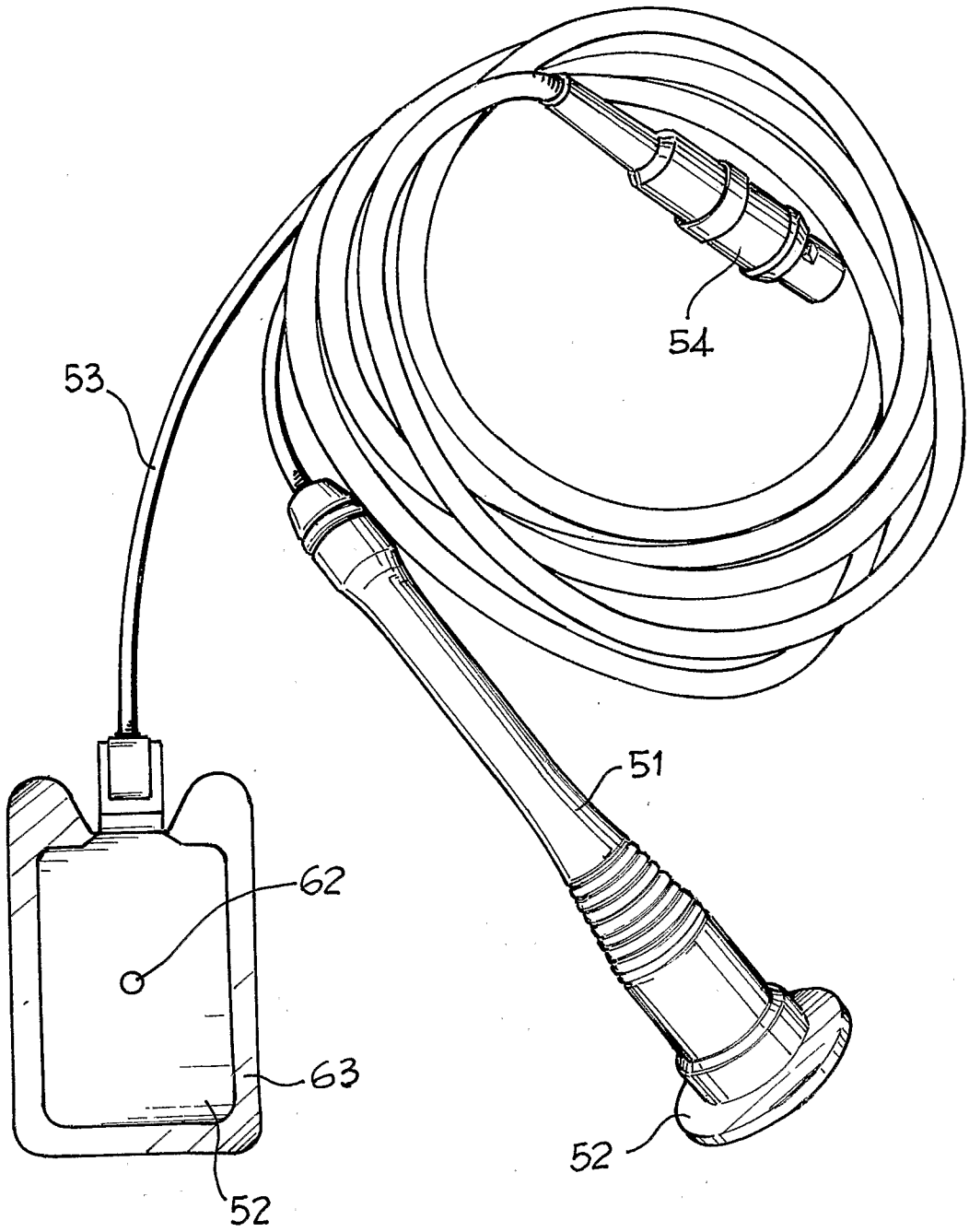

Fig.17

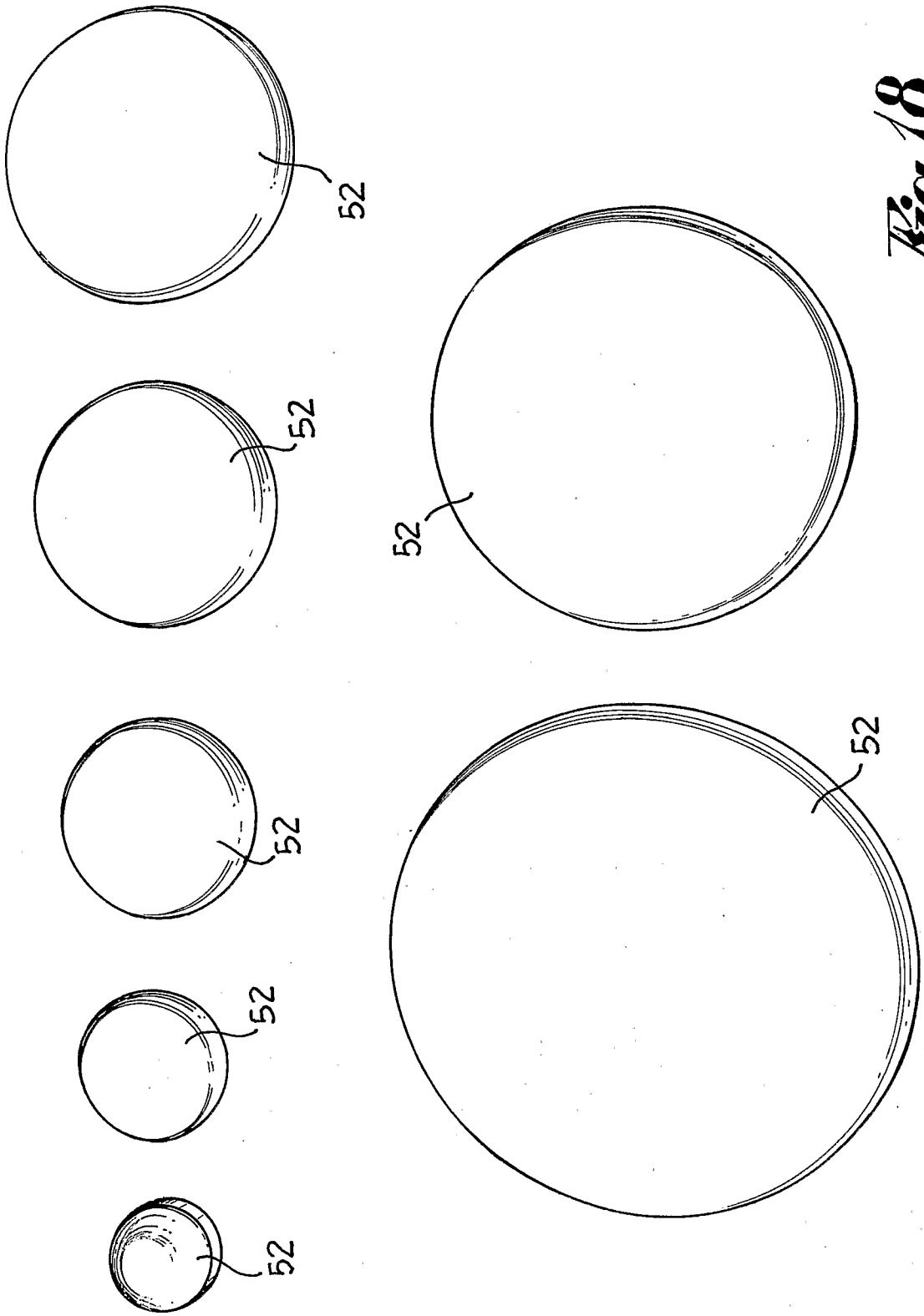

Fig.18

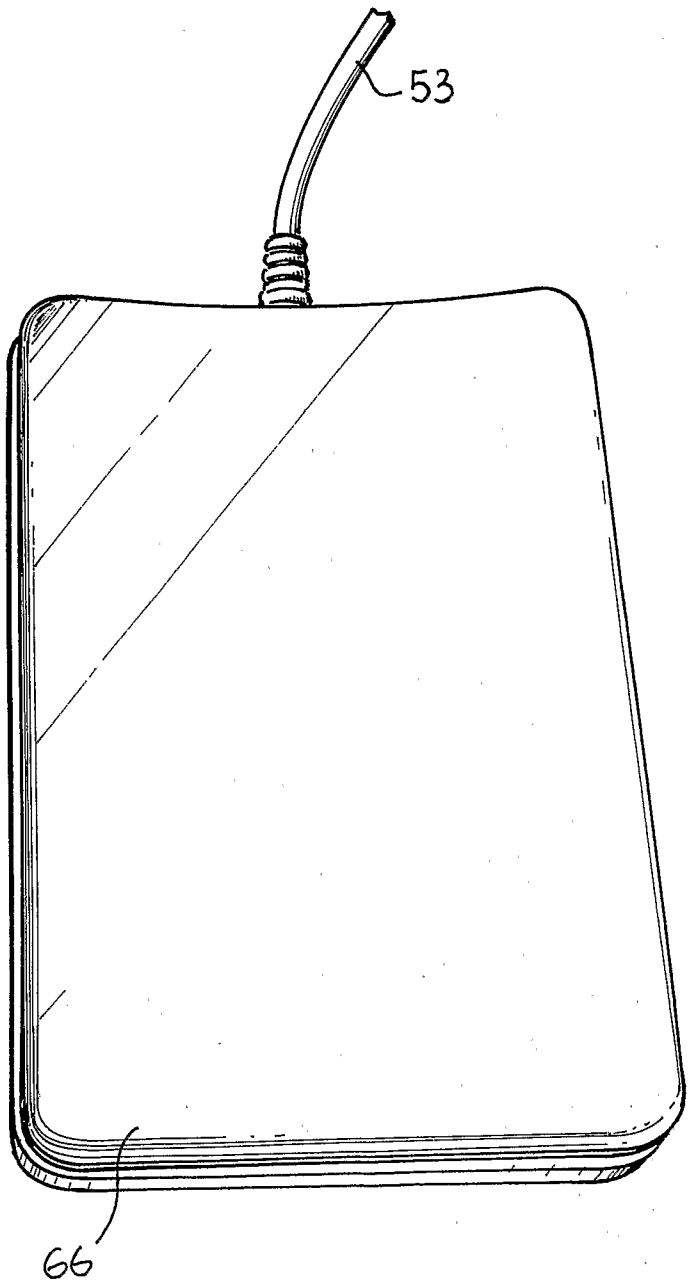

Fig.19

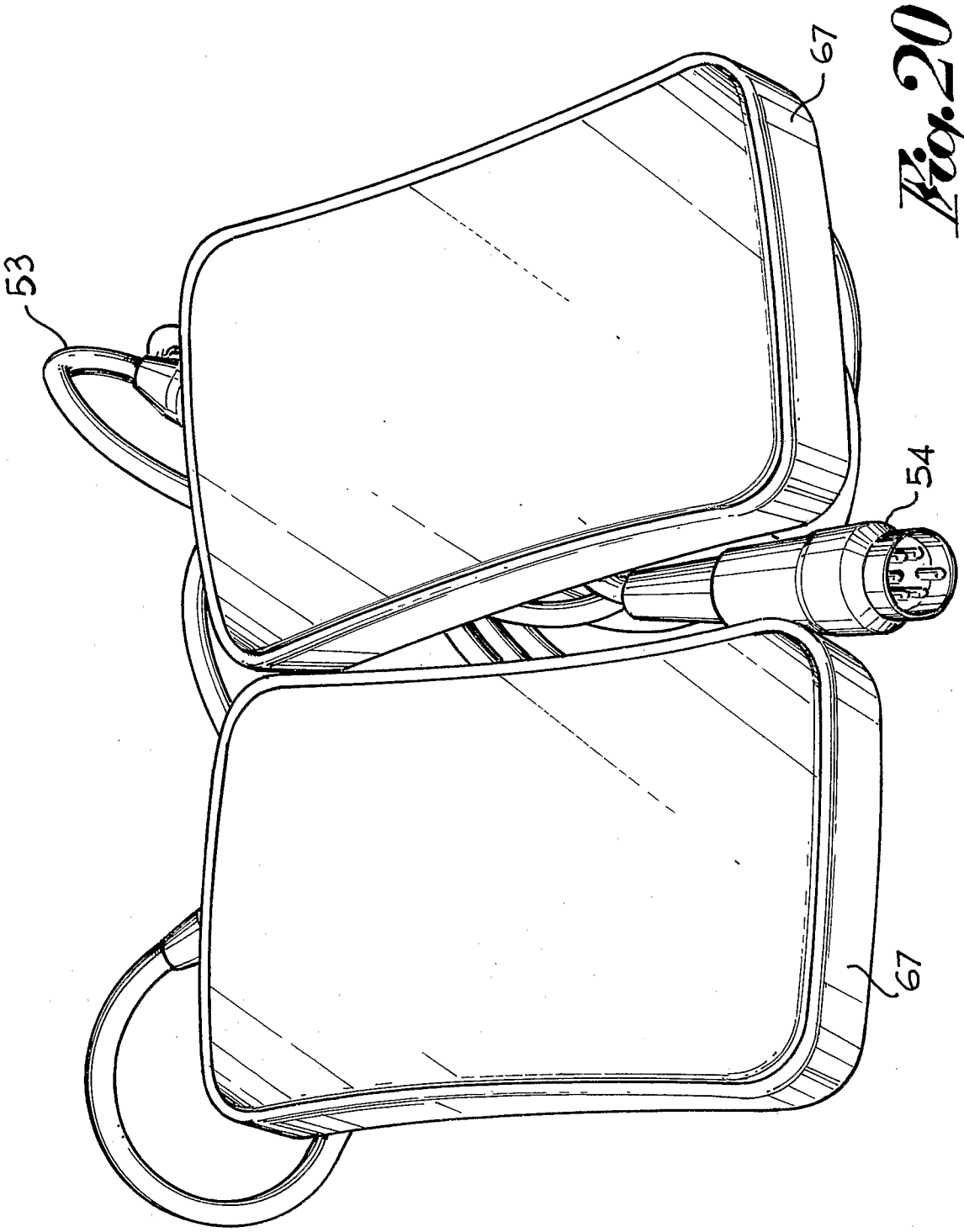

Fig. 20

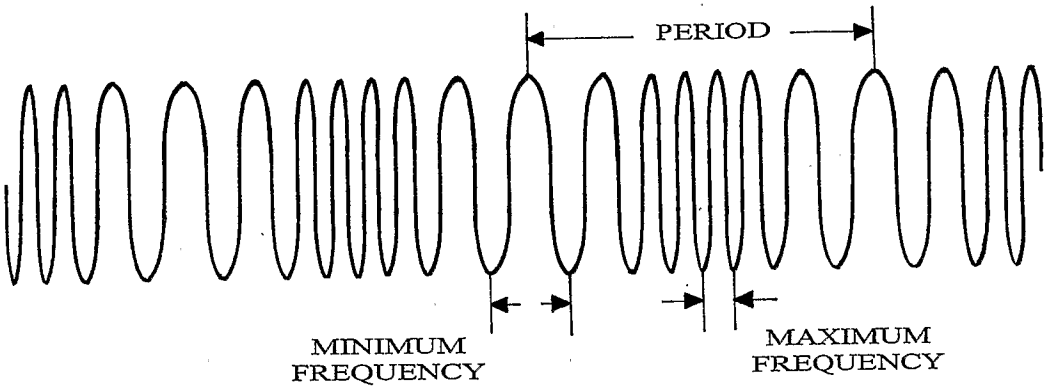

Fig. 21

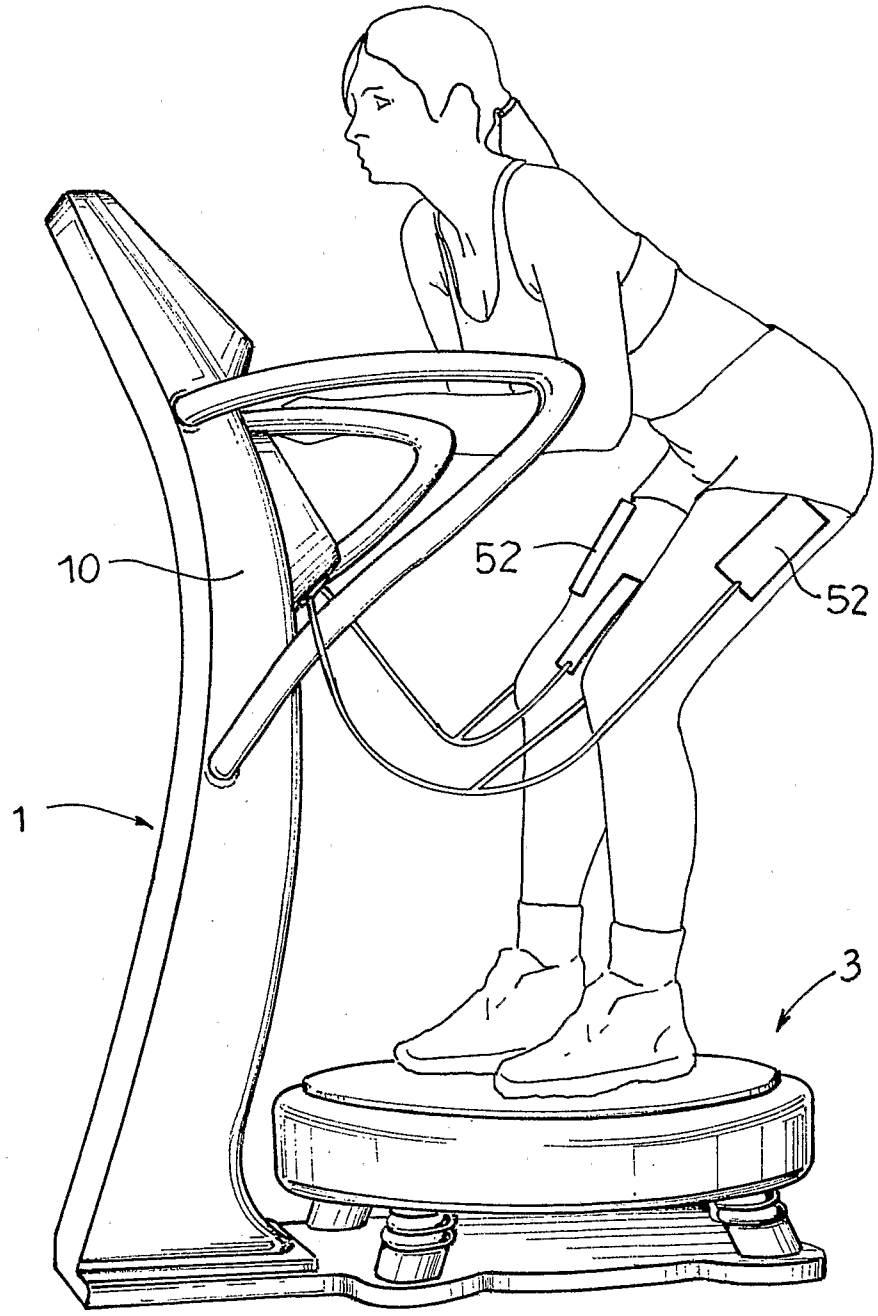

Fig. 22

Fig. 23

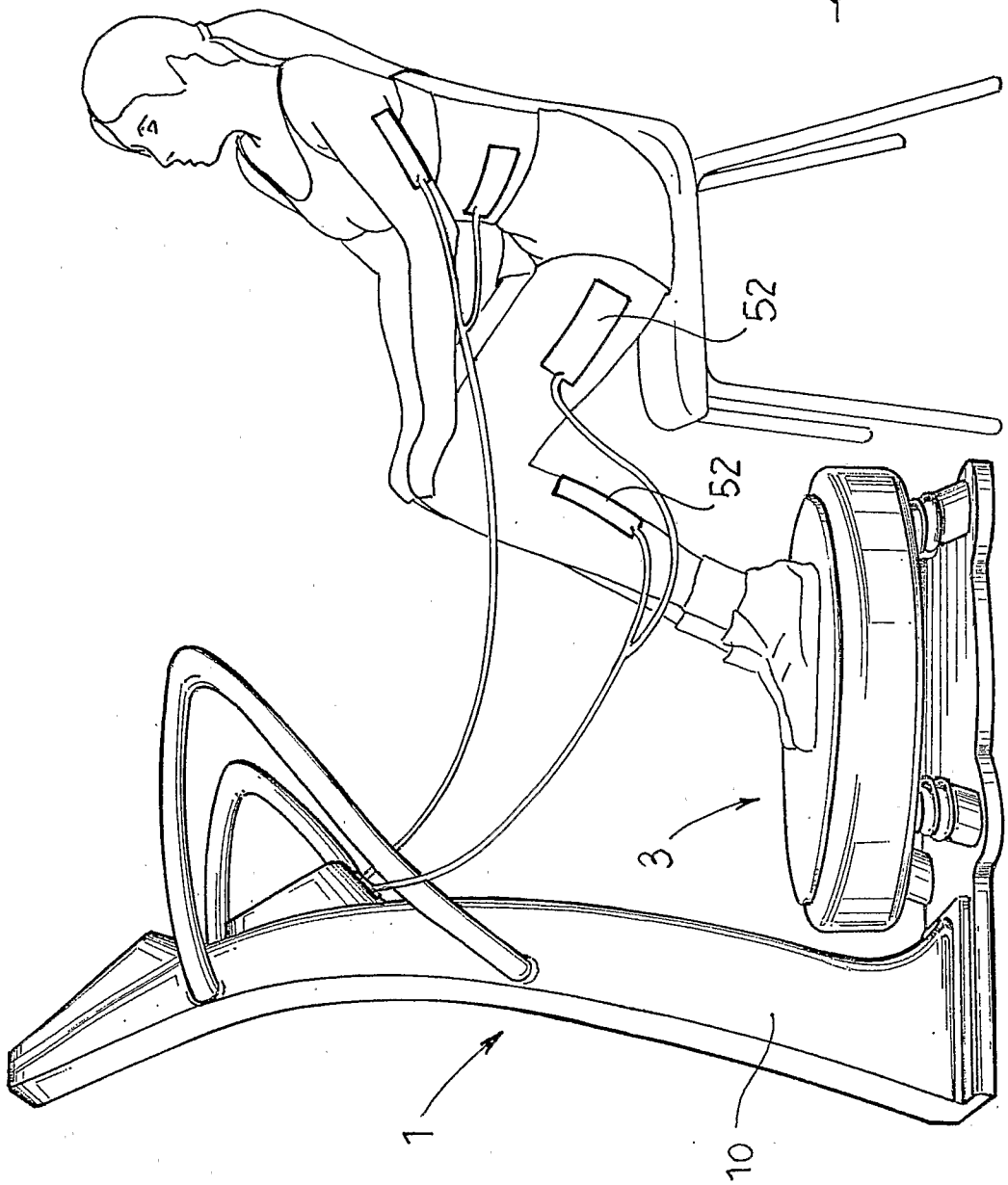

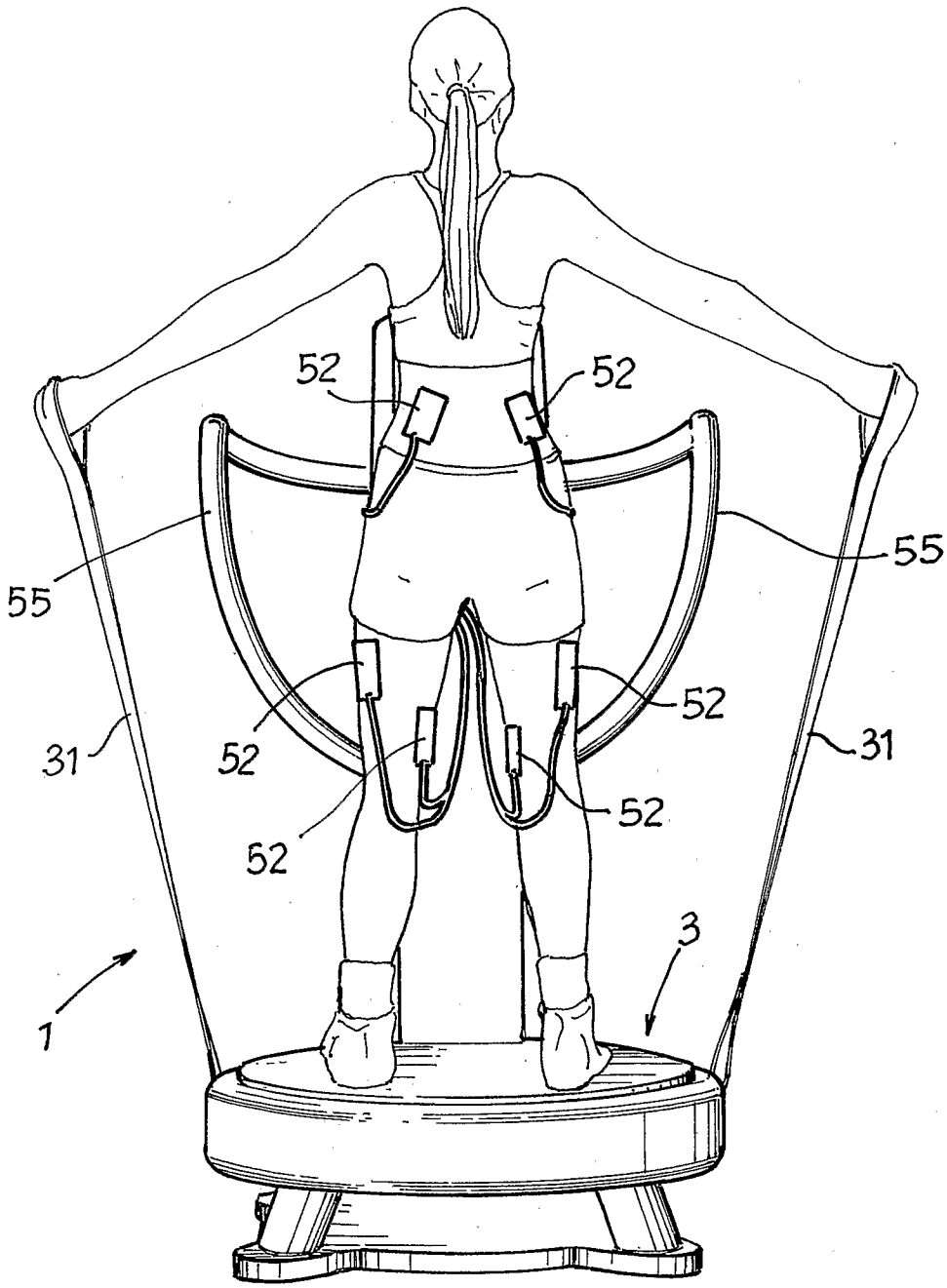

Fig. 24

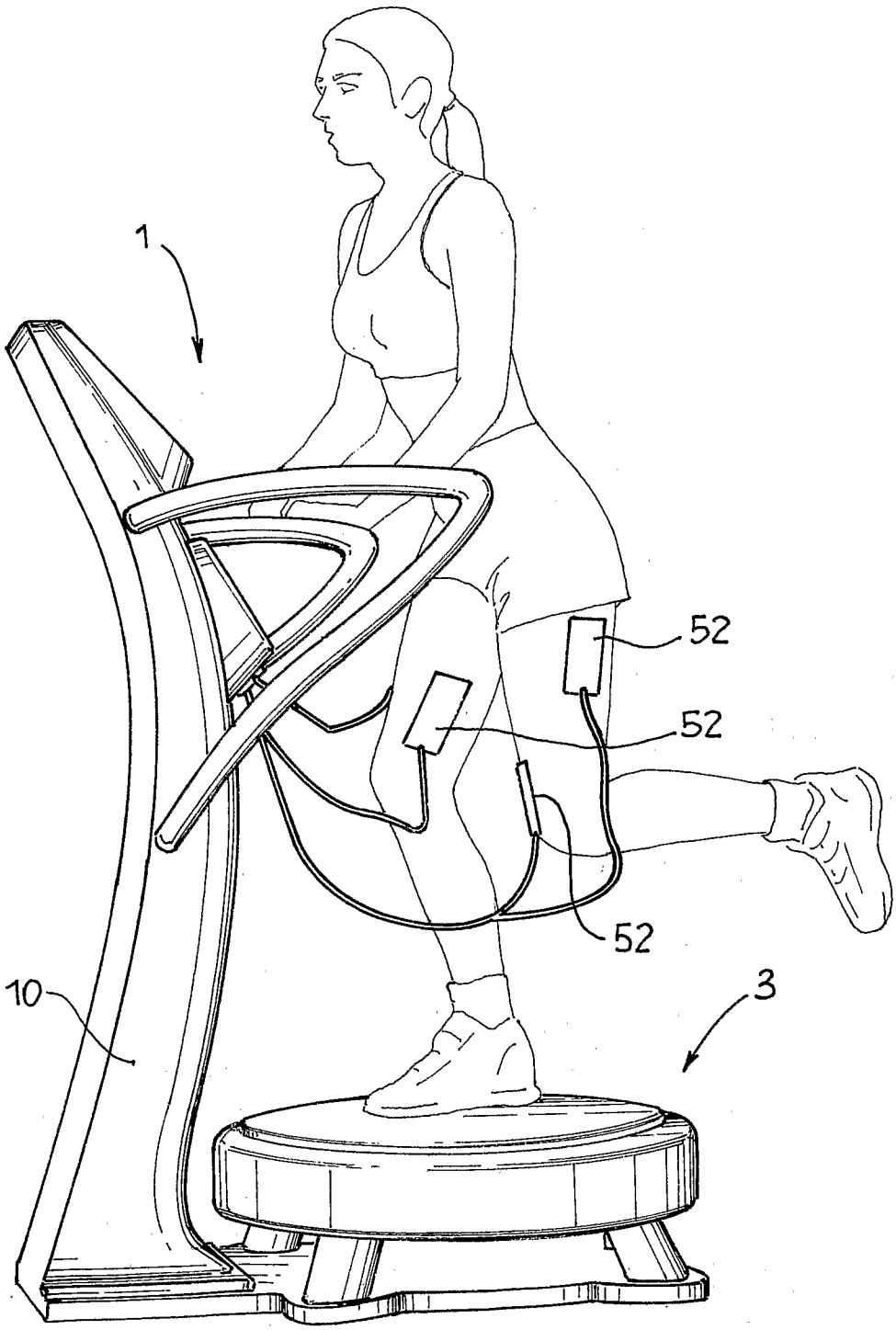

Fig. 25

INTERNATIONAL SEARCH REPORT

International application No
PCT/IT2006/000224

A. CLASSIFICATION OF SUBJECT MATTER
INV. A61H1/00

According to International Patent Classification (IPC) or to both national classification and IPC

B. FIELDS SEARCHED

Minimum documentation searched (classification system followed by classification symbols)
A61H

Documentation searched other than minimum documentation to the extent that such documents are included in the fields searched

Electronic data base consulted during the international search (name of data base and, where practical, search terms used)
EPO-Internal, WPI Data

C. DOCUMENTS CONSIDERED TO BE RELEVANT

Category*	Citation of document, with indication, where appropriate, of the relevant passages	Relevant to claim No.
X	US 4 873 966 A (GITTER MICHAEL [US]) 17 October 1989 (1989-10-17) the whole document	1-137
X	US 2 792 830 A (ADEN DACEY JOHN) 21 May 1957 (1957-05-21) the whole document	1-137
X	US 5 188 095 A (HEALY CHARLES D [US]) 23 February 1993 (1993-02-23) the whole document	1-137
E	US 2006/094990 A1 (KIM SEONG B [KR]) 4 May 2006 (2006-05-04) the whole document	1-137
A	DE 92 09 023 U1 (CHENG, CHENG-I, CHUNG-LI, TW) 5 November 1992 (1992-11-05) figures	1

☐ Further documents are listed in the continuation of Box C.

☒ See patent family annex.

* Special categories of cited documents :

"A" document defining the general state of the art which is not considered to be of particular relevance

"E" earlier document but published on or after the international filing date

"L" document which may throw doubts on priority claim(s) or which is cited to establish the publication date of another citation or other special reason (as specified)

"O" document referring to an oral disclosure, use, exhibition or other means

"P" document published prior to the international filing date but later than the priority date claimed

"T" later document published after the international filing date or priority date and not in conflict with the application but cited to understand the principle or theory underlying the invention

"X" document of particular relevance; the claimed invention cannot be considered novel or cannot be considered to involve an inventive step when the document is taken alone

"Y" document of particular relevance; the claimed invention cannot be considered to involve an inventive step when the document is combined with one or more other such documents, such combination being obvious to a person skilled in the art.

"&" document member of the same patent family

Date of the actual completion of the international search	Date of mailing of the international search report
14 November 2006	08 -02- 2007

Name and mailing address of the ISA/	Authorized officer
European Patent Office, P.B. 5818 Patentlaan 2 NL - 2280 HV Rijswijk Tel. (+31-70) 340-2040, Tx. 31 651 epo nl, Fax: (+31-70) 340-3016	Knoflacher, Nikolaus

INTERNATIONAL SEARCH REPORT

International application No.
PCT/IT2006/000224

Box II Observations where certain claims were found unsearchable (Continuation of item 2 of first sheet)

This International Search Report has not been established in respect of certain claims under Article 17(2)(a) for the following reasons:

1. [X] Claims Nos.: 140-143
because they relate to subject matter not required to be searched by this Authority, namely:

Rule 39.1(iv) PCT - Method for treatment of the human or animal body by therapy

2. [ ] Claims Nos.:
because they relate to parts of the International Application that do not comply with the prescribed requirements to such an extent that no meaningful International Search can be carried out, specifically:

3. [ ] Claims Nos.:
because they are dependent claims and are not drafted in accordance with the second and third sentences of Rule 6.4(a).

Box III Observations where unity of invention is lacking (Continuation of item 3 of first sheet)

This International Searching Authority found multiple inventions in this international application, as follows:

see additional sheet

1. [ ] As all required additional search fees were timely paid by the applicant, this International Search Report covers all searchable claims.

2. [ ] As all searchable claims could be searched without effort justifying an additional fee, this Authority did not invite payment of any additional fee.

3. [ ] As only some of the required additional search fees were timely paid by the applicant, this International Search Report covers only those claims for which fees were paid, specifically claims Nos.:

4. [X] No required additional search fees were timely paid by the applicant. Consequently, this International Search Report is restricted to the invention first mentioned in the claims; it is covered by claims Nos.:

1-137

Remark on Protest

[ ] The additional search fees were accompanied by the applicant's protest.

[ ] No protest accompanied the payment of additional search fees.

FURTHER INFORMATION CONTINUED FROM PCT/ISA/ 210

This International Searching Authority found multiple (groups of) inventions in this international application, as follows:

1. claims: 1-137

   footboard with stressing means and hyperthermy inducing means

   ---

2. claim: 138

   footboard with stressing means and storing means

   ---

3. claim: 139

   means for inducing hyperthermy having control, actuation and storing means

   ---

4. claims: 144,145

   memory card

INTERNATIONAL SEARCH REPORT

Information on patent family members

International application No
PCT/IT2006/000224

Patent document cited in search report	Publication date	Patent family member(s)	Publication date
US 4873966 A	17-10-1989	NONE	
US 2792830 A	21-05-1957	NONE	
US 5188095 A	23-02-1993	NONE	
US 2006094990 A1	04-05-2006	KR 20060038008 A	03-05-2006
DE 9209023 U1	05-11-1992	NONE	