Jan. 3, 1939. C. C. DI VINCENZO 2,142,868

RECEPTACLE HOLDER

Filed June 9, 1938

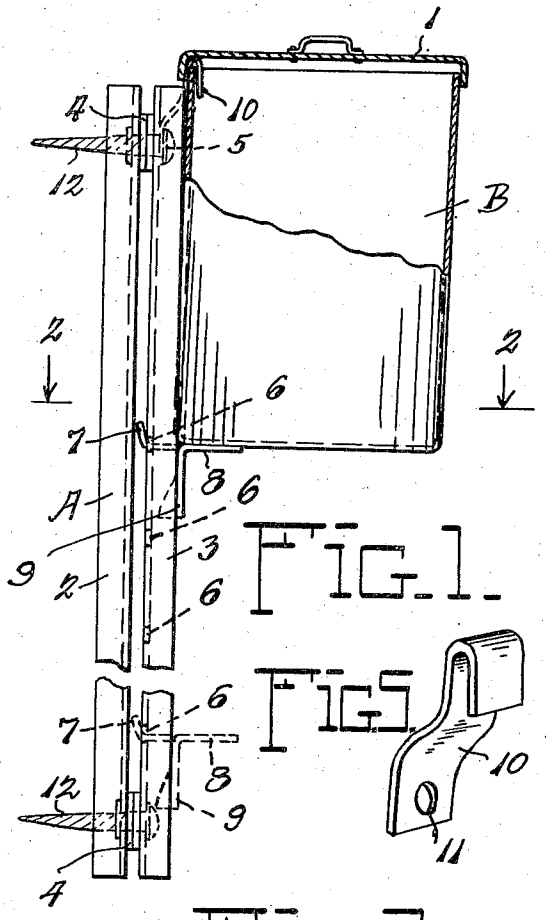

FIG. 1.

FIG. 5.

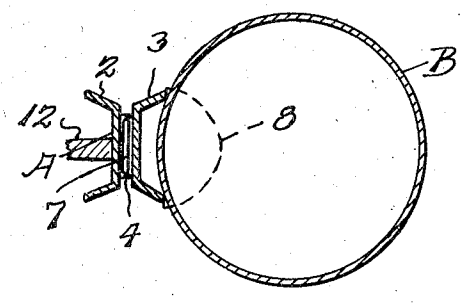

FIG. 2.

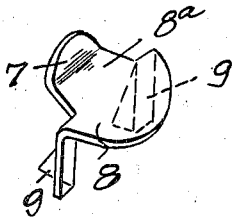

FIG. 3.

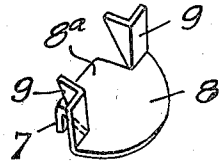

FIG. 4.

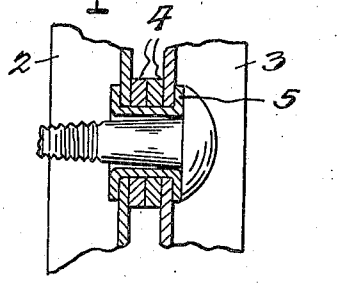

FIG. 6.

Inventor

CASEY C. DIVINCENZO.

By Robbins Robbins

ATTORNEYS

Patented Jan. 3, 1939 2,142,868

UNITED STATES PATENT OFFICE

2,142,868

RECEPTACLE HOLDER

Casey C. Di Vincenzo, Cleveland, Ohio

Application June 9, 1938, Serial No. 212,842

2 Claims. (Cl. 248—146)

This invention has to do with holders or supports for receptacles. The invention is primarily designed for the purpose of conveniently mounting or supporting cans or receptacles such as are used for containing garbage, paper, or the like. As a convenient and handy means for supporting garbage cans, my device may be readily attached to a wall or post or any similar support, exterior to a dwelling, or the invention is of advantage used in kitchens of restaurants, under which conditions the supporting standard and appurtenances thereof may be secured alongside a counter or table so that garbage or refuse brought from the dining room of a restaurant to be subsequently thrown away, may be readily placed in the receptacle mounted upon said standard.

The device of the invention comprises in combination a standard or supporting member adapted to be detachably fixed to any convenient wall or like part, adjustable means on the standard for supporting the bottom portion of cans of different sizes, and an interlocking hook at the upper portion of the standard arranged to engage the rim portion of an open can when the receptacle is in position upon the standard or supporting member.

The invention involves other detail features of construction that will appear more fully as the following description proceeds, and in the accompanying drawing—

Figure 1 is a side elevation of a device embodying the invention, the garbage can or other receptacle being broken away at the top and shown in section to more clearly illustrate the manner in which the hook coacts therewith.

Figure 2 is a cross sectional view taken about on the line 2—2 of Figure 1, looking downwardly.

Figure 3 is a perspective view of the adjustable bracket which is adapted to engage the bottom of the receptacle.

Figure 4 is an inverted perspective view of said bracket.

Figure 5 is a detail perspective view of the engaging hook for the upper end of the receptacle.

Figure 6 is a fragmentary vertical sectional view bringing out more clearly the mode of assembling the U-shaped plates of the supporting standard and manner of attaching the standard to a part by which it is to be maintained in an upright position.

In the accompanying drawing the designation A indicates the supporting standard, and the designation B denotes the receptacle mounted thereon. The receptacle B may be used to contain any refuse or other material desired to be supported for any purpose whatsoever. The receptacle B has a cover 1. The supporting standard A is preferably made up of two vertical plate members 2 and 3. These members are made somewhat U-shaped in cross-section so that they are virtually channels, and the flat sides thereof are spaced apart by washers 4 or the like. To secure the plate members 2 and 3 together, hollow rivets 5 are availed of, the opposite ends of these rivets being offset for clamping and uniting purposes.

The inner portion of the plate members 3 of the standard A is provided with a series of slots or openings 6, any one of which is adapted to receive the upwardly extending lug 7 of the horizontal bracket 8. The said bracket has a rear extension 8a that carries the lug, said extension adapted to pass through any slot 6 throughout the length of the standard A. To provide an adequate bearing for the bracket 8 against the flanges at the edges of of the plate member 3, there are formed bearing arms 9 projecting downwardly from the bracket 8, which bearing arms are of somewhat angular formation having inner flanges to seat against the inner sides of the flanges of the plate member 3, and outer flanges which are adapted to engage or abut with the outermost edges of said flanges of the member 3.

The purpose in providing a number of the slots 6 in the standard A is to enable the bracket 8 to be adjusted vertically to different positions in the vertical length of the standard so as to accommodate for the use of the bracket in order that it may engage the bottom portion of cans or receptacles B of different sizes. With this in view of course the slots 6 may be spaced apart such distances as may accommodate the sizes of commercially sold receptacles B. The bracket 8 as shown in full lines in Figure 1 is positioned so as to support the receptacle B. However, dotted lines in Figure 1 show the bracket as when it might be adjusted so that a much larger receptacle B than that illustrated may be supported thereon.

At the upper end of the standard A the latter is provided with a hook 10, which hook has an aperture 11, see Figure 5. The hollow rivet 5 at the upper end of the standard A is employed to secure the shank of the hook 10 to the standard in abutment with the body of the plate member 3 between the flanges of the latter. The upper rivet 5 passes through the opening 11. The hook 10 is so arranged that it may readily engage over the rim at the upper end of an open

receptacle such as the receptacle B. It is a hook made from a flat plate and therefore does not interfere with the closing of the receptacle B by the cover 1 as the cover is able to readily spring over the top of the receptacle B notwithstanding the thickness of the portion of the hook 10 with which said cover engages.

It will be seen from the foregoing that I have provided a very simple construction of supporting standard equipped with the engaging means for the can or receptacle B comprising the adjustable bracket A and the hook member 10. The standard may be made entirely of metal, as indicated, and very cheaply constructed on this account. Its adaptability to be used with different sized receptacles is obtained through the adjustability of the bracket 8 as described. I do not wish to be limited to the exact form of the standard, but the latter is preferably made of spaced plate members 2 and 3 in order that the lug 7 of the bracket 8 may readily have a clearance space in rear of the plate member 3 in which the said lug may be received. Since the plate members 2 and 3 are of channel-like form, the plate member 2 when resting against the wall or the like only has a bearing at the edges of the two flanges and therefore the engagement of the member 2 with the wall or similar support means will not mar the latter to any appreciable extent owing to the edge contact of said flanges.

Any desirable means such as screws 12 may be used for securing the member 2 to the wall of a building or the like.

Having thus described my invention, what I claim as new and desire to secure by Letters Patent of the United States, is:

1. As a new article of manufacture, a receptacle supporting standard consisting of a pair of plates channel-shaped in cross-section, fastening means for said plates holding the same in spaced relation and with the side portions of their channels facing in opposite directions, one of said plates being provided with openings in its length, a bracket adjustable upon said last mentioned plate and having lug means to interlock with a selected one of said openings, said bracket also being formed with dependent arms to engage the side flanges of the last mentioned plate, and a hook attached to the last mentioned plate in spaced relation to the bracket, the said hook and bracket being adapted to supportingly hold a receptacle or can upon the standard.

2. As a new article of manufacture, a receptacle supporting standard consisting of a pair of plates channel-shaped in cross-section, fastening means for said plates holding the same in spaced relation and with the side portions of their channels facing in opposite directions, one of said plates being provided with openings in its length, a bracket adjustable upon said last mentioned plate and having lug means to interlock with a selected one of said openings, said bracket also being formed with dependent arms to engage the side flanges of the last mentioned plate, a hook attached to the last mentioned plate in spaced relation to the bracket, the said hook and bracket being adapted to supportingly hold a receptacle or can upon the standard, the fastening means for said plates maintaining them in spaced relation consisting of hollow rivets and washers between the plates held in position by the rivets, and attachment fastenings adapted to pass through the hollow rivets for securing the supporting standard to a wall, post, counter, or the like.

CASEY C. DI VINCENZO.