US00D559882S

(12) United States Design Patent

Nakamura

(10) Patent No.: US D559,882 S
(45) Date of Patent: ** Jan. 15, 2008

(54) **CAMERA**

(75) Inventor: **Takatoshi Nakamura**, Shinagawa-ku (JP)

(73) Assignee: **Sony Computer Entertainment Inc.**, Tokyo (JP)

(**) Term: **14 Years**

(21) Appl. No.: **29/263,545**

(22) Filed: **Jul. 26, 2006**

(30) **Foreign Application Priority Data**

Jan. 31, 2006 (JP) 2006-002054

(51) **LOC (8) Cl.** **16-01**
(52) **U.S. Cl.** **D16/218**
(58) **Field of Classification Search** D16/200–206, D16/208, 212, 213, 218; 348/373–376; 358/909.1; 396/535–541
See application file for complete search history.

(56) **References Cited**

U.S. PATENT DOCUMENTS

D216,849 S * 3/1970 Rhoades D16/221
D258,444 S * 3/1981 Mineshima D16/218
D425,924 S * 5/2000 Burchard et al. D16/218
D449,628 S * 10/2001 Obata et al. D16/202
D477,345 S * 7/2003 Hildreth D16/203
D506,215 S 6/2005 Lin et al.
D528,576 S 9/2006 Chung et al.
D530,731 S * 10/2006 Tanaka et al. D16/202
D530,732 S * 10/2006 Tanaka et al. D16/202
D533,887 S * 12/2006 Logan et al. D16/208
D535,676 S * 1/2007 Dayan D16/218

FOREIGN PATENT DOCUMENTS

JP D1070961 S 5/2000
TW 430391 4/2001
TW 586844 5/2004

OTHER PUBLICATIONS

Taiwan IPO Search Report dated May 8, 2007.

* cited by examiner

Primary Examiner—Adir Aronovich
(74) *Attorney, Agent, or Firm*—Rader, Fishman & Grauer PLLC

(57) **CLAIM**

The ornamental design for a camera, as shown.

DESCRIPTION

FIG. **1** is a bottom left front perspective view of a camera showing my new design;

FIG. **2** is a front elevational perspective view thereof;

FIG. **3** is a rear elevational view thereof;

FIG. **4** is a left elevational view thereof;

FIG. **5** is a right elevational view thereof;

FIG. **6** is a top plan view thereof; and,

FIG. **7** is a bottom plan view thereof.

1 Claim, 7 Drawing Sheets

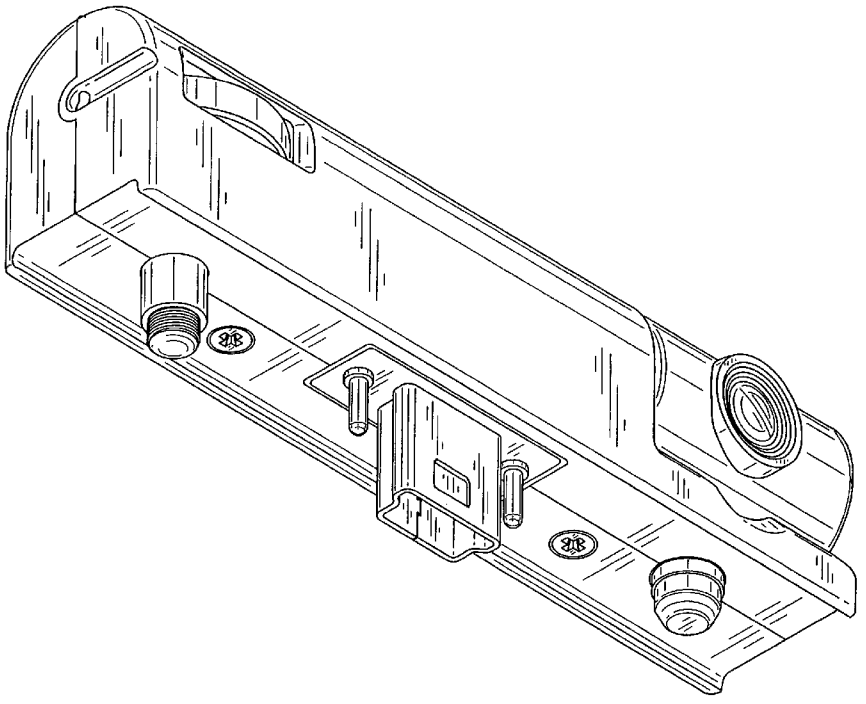

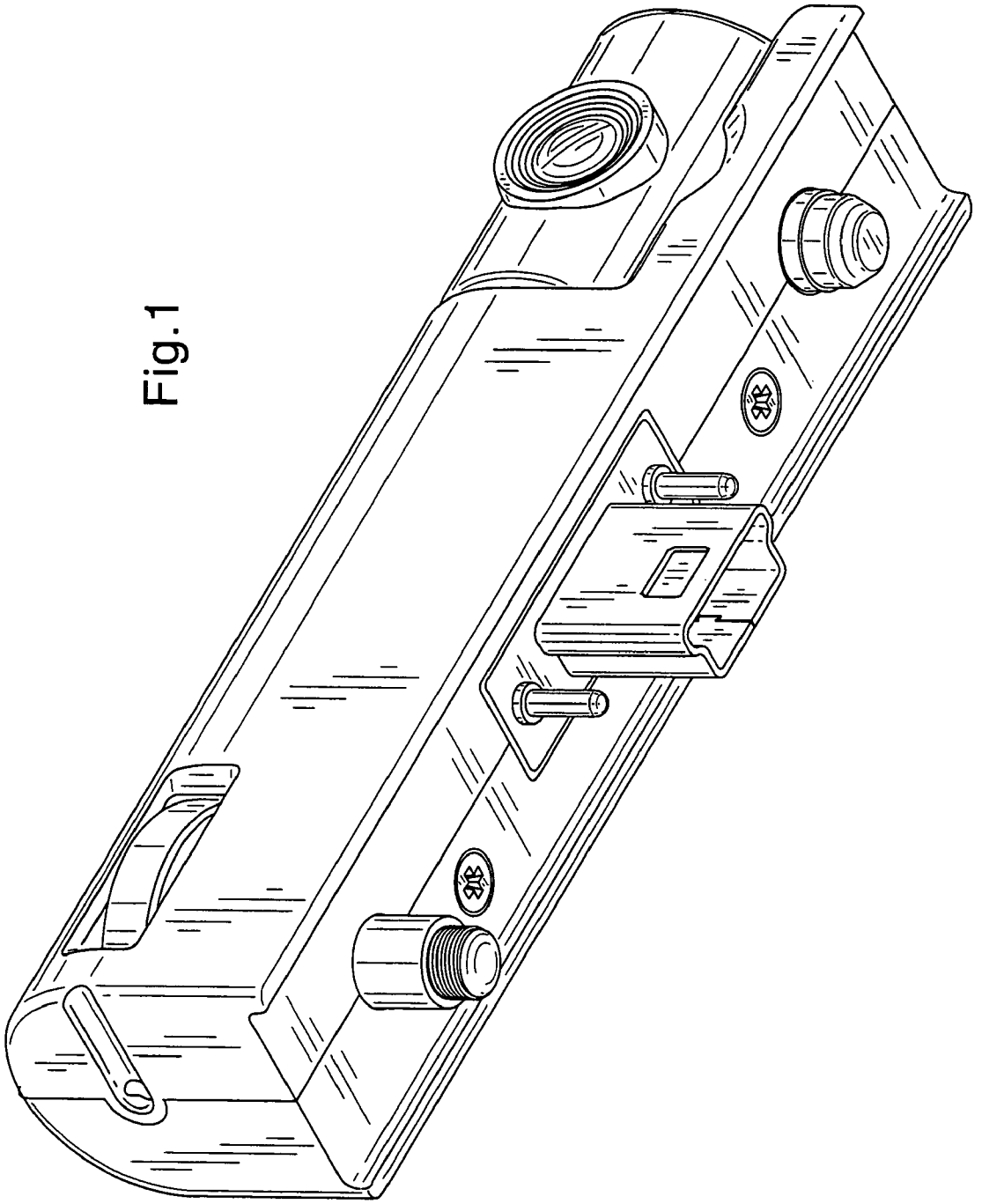

Fig.1

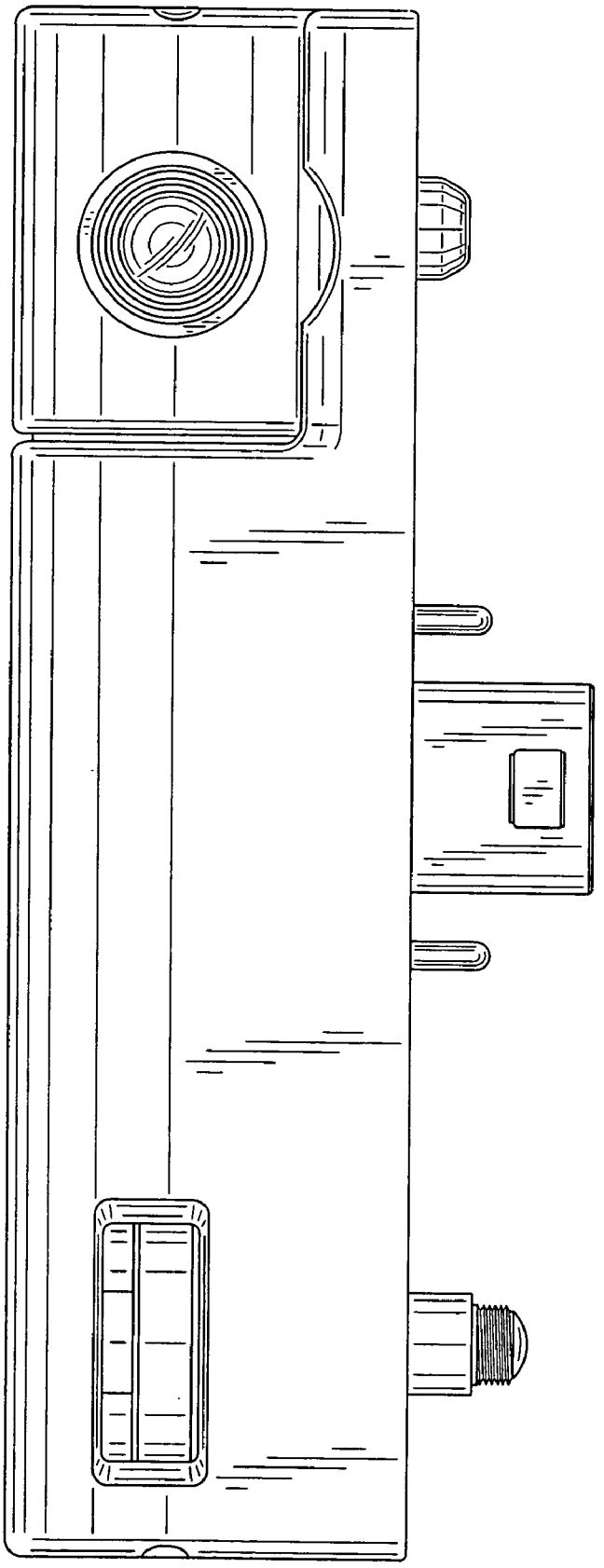

Fig.2

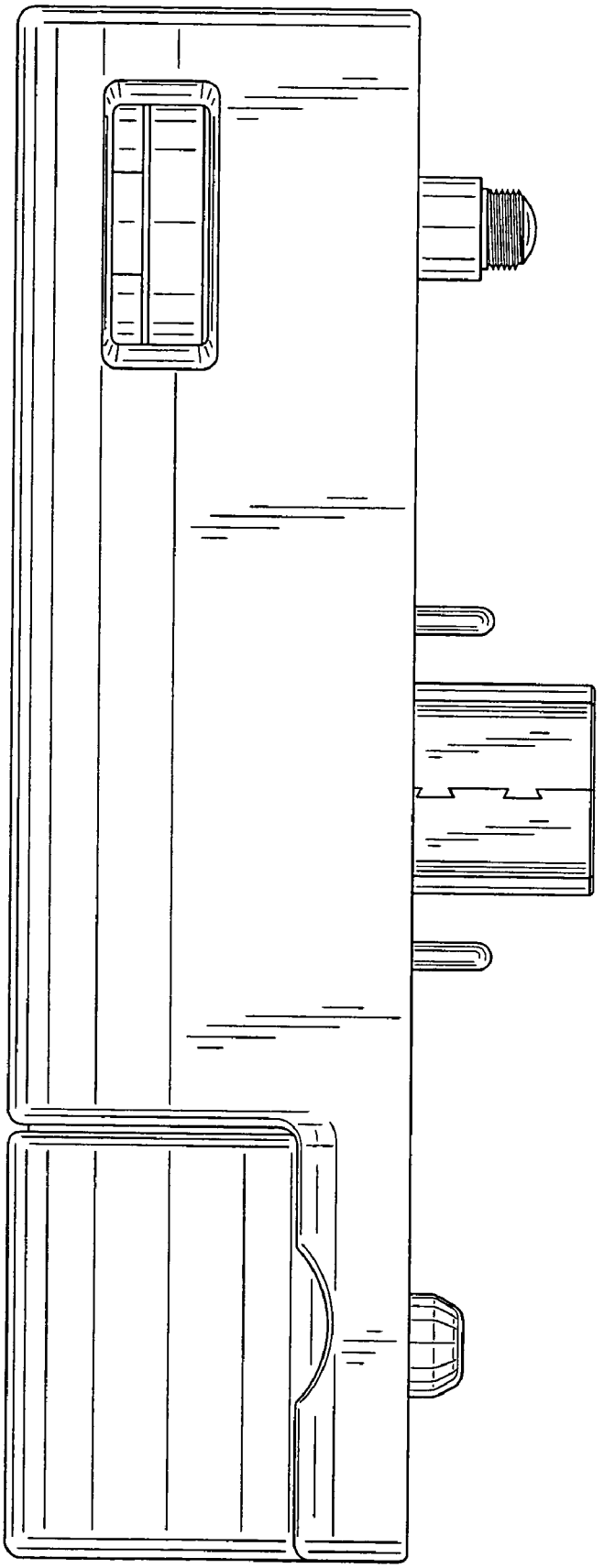

Fig.3

Fig.4

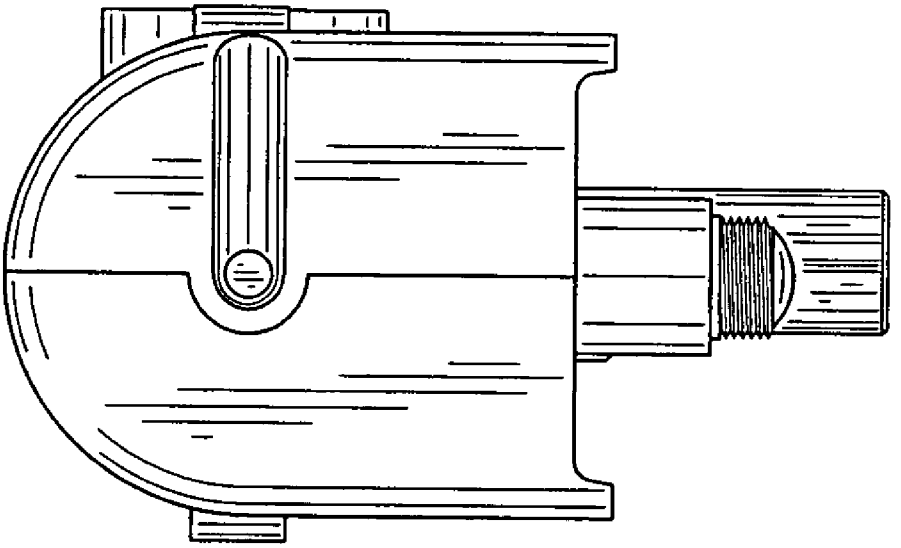

Fig.5

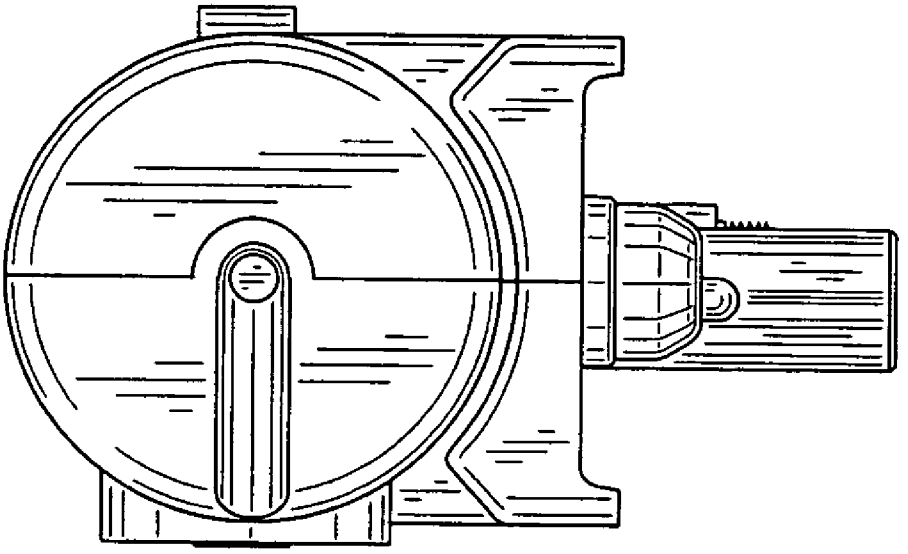

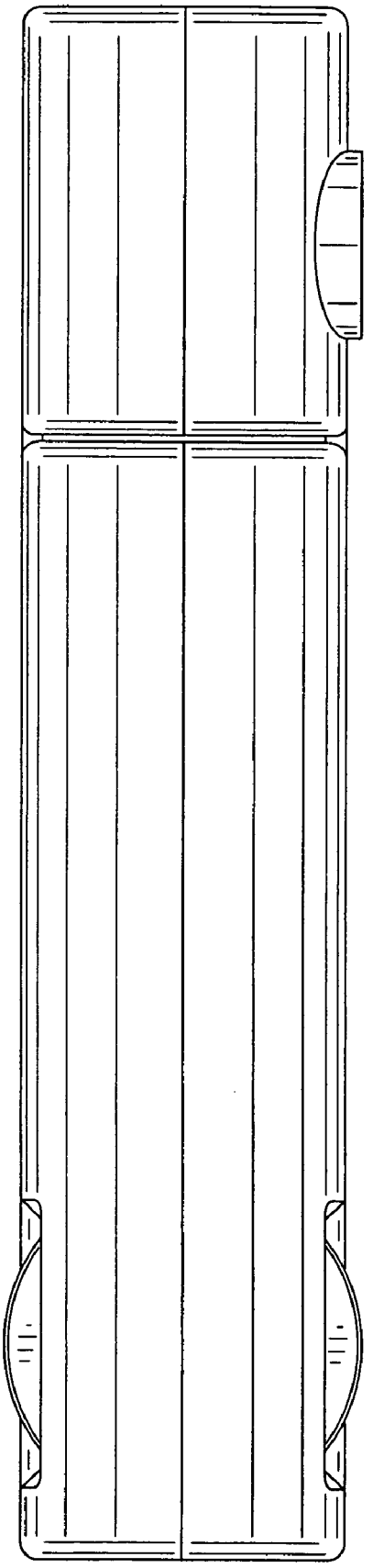

Fig.6

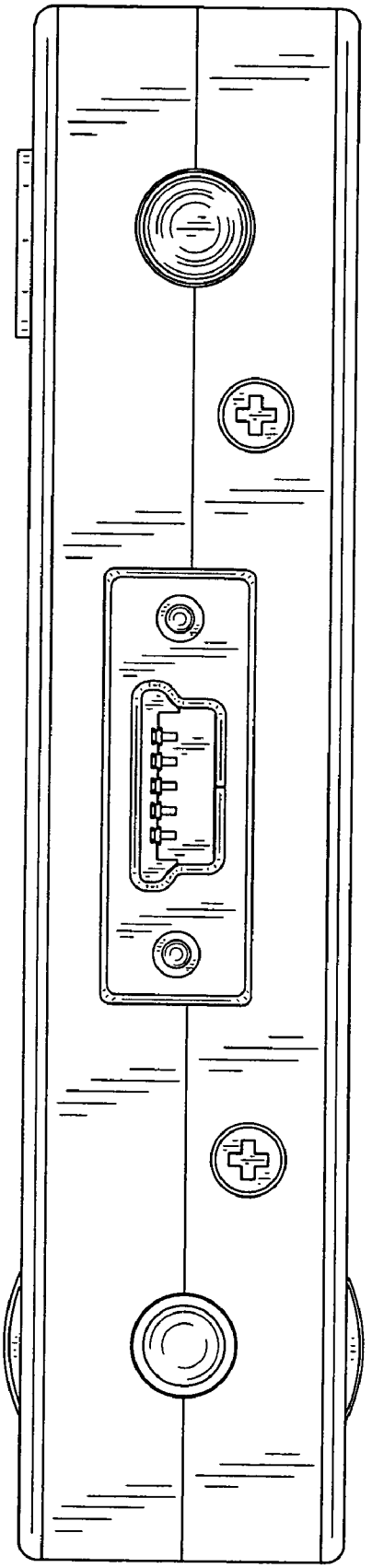

Fig.7