United States Patent

Johnson et al.

[15] **3,647,118**

[45] **Mar. 7, 1972**

[54] LIQUOR-DISPENSING SYSTEM

[72] Inventors: **James H. Johnson**, Minneapolis; **William C. McGuire**, St. Paul, both of Minn.

[73] Assignee: **Select Systems, Inc.**, Minneapolis, Minn.

[22] Filed: **Aug. 4, 1969**

[21] Appl. No.: **847,135**

[52] **U.S. Cl.**.....**222/145**, 222/1, 222/132, 222/185, 222/400.7, 222/136

[51] **Int. Cl.**.....**B67d 5/60**

[58] **Field of Search**.....222/145, 129.4, 1, 129, 129.1, 222/132, 185, 400.7, 399, 135, 136

[56] **References Cited**

UNITED STATES PATENTS

3,015,419	1/1962	Arnett et al.	222/145
2,901,002	8/1959	Small et al.	222/145
2,711,268	6/1955	Cannella	222/153 X
3,219,236	11/1965	Radcliffe	222/399 X
3,341,073	9/1967	Arps et al.	222/400.7 X

Primary Examiner—Robert B. Reeves
Assistant Examiner—James M. Slattery
Attorney—L. A. MacEachron

[57] **ABSTRACT**

A manifold having one end elevated with respect to the other, liquor bottle connections along its length, an air inlet at the elevated end of the manifold and a liquor outlet at the lower end of the manifold, is connected to a liquor-metering means. The bottles are connected to the manifold by valves to permit removing a single bottle while the others are being emptied. The bottles empty sequentially but independently.

4 Claims, 3 Drawing Figures

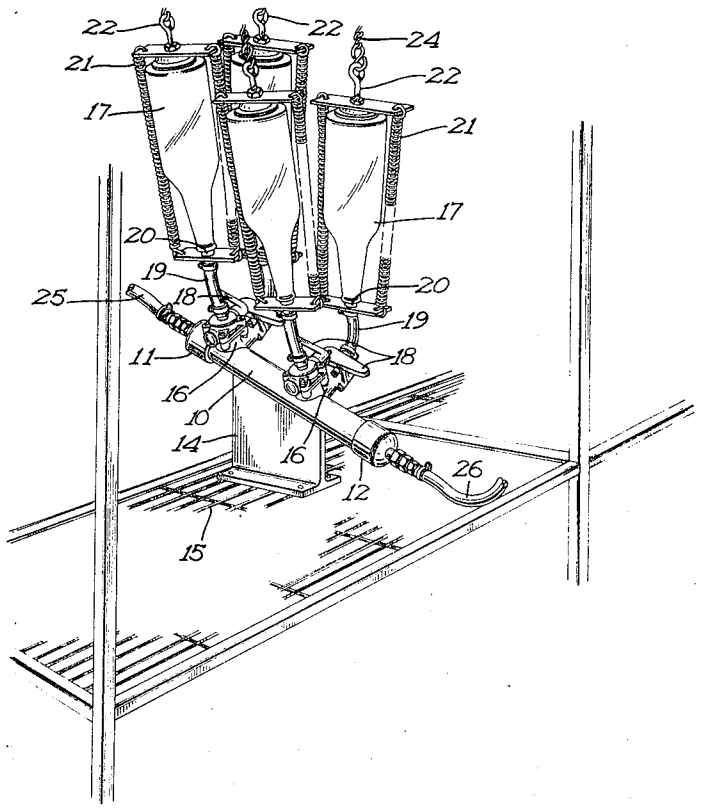

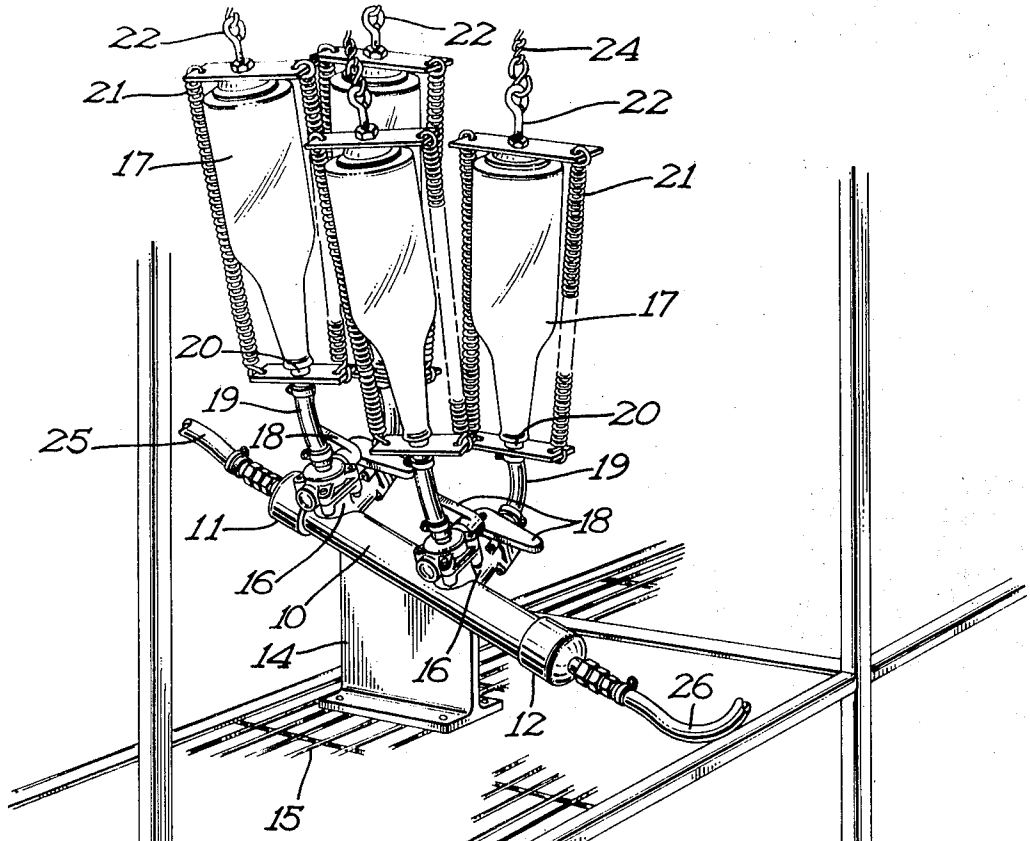

FIG 1

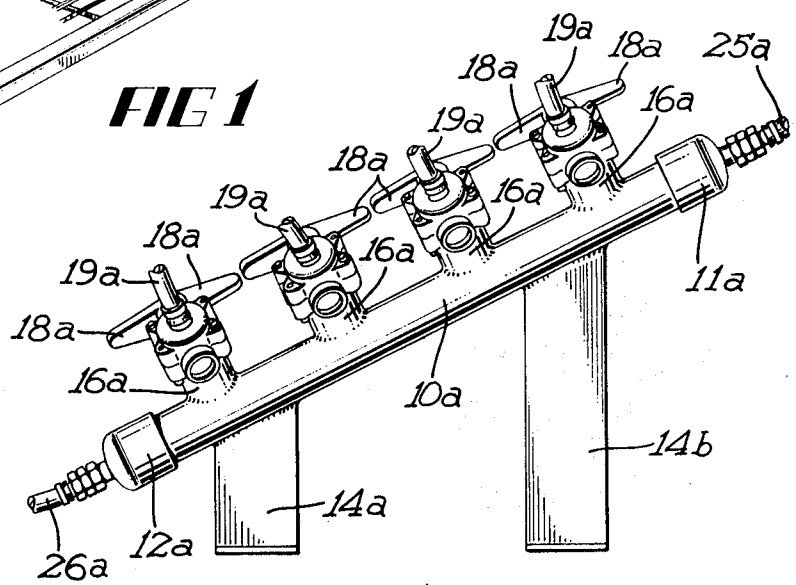

FIG 3

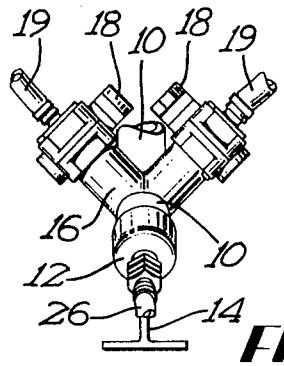

FIG 2

INVENTORS
JAMES H. JOHNSON,
WILLIAM C. Mc GUIRE
BY
L. A. Mac Eachron
ATTORNEY

LIQUOR-DISPENSING SYSTEM

BACKGROUND OF THE INVENTION

Before the present invention, liquor dispensers were so limited in the manner in which they dispensed liquor as to create problems. None of the type of dispenser that measured liquor with a pump are capable of having the liquor supply in the basement of the building in which the bar is. They simply cannot raise the liquor that far. Units that use air under pressure to deliver the liquor are limited in capacity by the strength of the glass in the liquor bottles. The limitation just described results from the fact that the liquor bottles in the system are connected in a chain or like a series electrical system. Liquor is forced out of the end bottle and into the succeeding bottle. The liquor in the succeeding bottle is then displaced into the next bottle in line and so forth until liquor from the last bottle is delivered into a drink. Forces required to move the liquor increase very rapidly as the number of bottles in the chain grows. Fairly soon and definitely at some point below the desired capacity, at least for an active bar with a large clientele, the air pressure required would exceed the strength of the bottles. In practice a pressure well below the breaking point of the bottles is used for safety. This invention obviates the above limitations on air pressure operated systems.

SUMMARY OF THE INVENTION

This invention is a liquor dispenser of the type that uses air pressure to force liquor through tubes, usually from the basement of the building in which the bar is located to the bar at street level. The improvement is in connecting bottles into the system in such a way that they are used sequentially and may be replaced independently of the operation of the system on the remaining bottles. For this reason the pressure necessary to move the liquor is reduced to that necessary to move the amount of liquor in the common manifold and hence the only limit on the number of bottles feeding the system is the space available in which to put them. Nearly the same air pressure function for 50 bottles as for five. The only difference would be the added liquor in the longer manifold necessary for more bottles which is very little.

Basically this is achieved by having a manifold that is higher at one end than at the other. Air is applied at the high end and liquor is removed at the low end. In a gravity system, air would merely be admitted to permit the liquor to flow. In the pressure system, air at pressures which exceed atmospheric are applied. As liquor is used, air enters the manifold. Air will rise to the surface of the liquor when it has a chance. This opportunity is presented whenever the air reaches a bottle mouth in which there is still some liquid. The entering air replaces the liquor until the bottle is empty. For this reason, the bottles near the air inlet empty first. Each bottle is connected to the manifold via a valve so that an any inlet to which an empty bottle is connected may be closed and the empty bottle replaced without disturbing the operation of the system with respect to the remaining bottles. The invention is described in detail in connection with accompanying drawings briefly described below.

BRIEF DESCRIPTION OF THE DRAWINGS

FIG. **1** is a perspective view of a manifold with bottles secured to it; broken lines are used to indicate continuing repetitive parts.

FIG. **2** is a view of a fragment of the manifold from the lower end of it.

FIG. **3** is a side view of a longer manifold than the one shown in FIG. **1**.

DETAILED DESCRIPTION OF THE INVENTION

In FIG. **1**, manifold **10** is seen to be supported with one end **11** in an elevated position relative to the other end **12**. One practical way to do this is with the bracket **14** resting on a horizontal surface **15**. While the extent of elevation is not extremely critical, an angle of 25° up from the horizontal has proven to be very satisfactory.

Along the manifold **10** at suitable intervals are the connections **16** for bottles **17**. In the particular form of the structure shown, there are a pair of connections in the form of a Y at each location. Each connection is provided with an open or closed valve as at **18**. To each valve is secured a flexible conduit of some suitable type such as the hoses or tubes **19** which terminate in a stopperlike structure **20** to which the bottles may be secured in a liquidtight relationship. A suitable means **21**, for example the spring harness shown, is used to keep the bottles in this liquidtight association. The spring harness, means **21**, may include a suitable device by which to suspend the bottles such as eyebolt **22** and chain **24**.

At the end **11** of manifold **10** is the air inlet which when a pressure system is used, is provided with a hose **25** which leads to a supply of air under pressure, not shown. At **12** is a hose **26** which leads to a known liquor dispensing or measuring means, not shown.

FIG. **2** is merely an end view of a fragments of the structure in FIG. **1** so the same number are used to designate the parts.

FIG. **3** shows a side view of a structure like that in FIG. **1** except that a larger number of bottle connections are provided. For this reason, the same numbers are used to designate the parts but they are followed by the suffix *a* with the exception of the second bracket which is called **14***b*.

OPERATION

To operate the system, valves **18** are closed and a bottle **17** is secured to the stopper means **20**. This is done by releasing chain **24** from whatever suitable structure is used to hold it and lowering the spring harness **21**. A bottle can then be engaged with the stopper means **20** while the bottle is being supported in a vertical position. After the stopper means **20** is firmly in the bottle, the spring harness is stretched until it will engage the bottle bottom as shown in FIG. **1**. Chain **24** is then resecured and valve **18** opened. When as many bottles as desired are mounted and connected to manifold **10**, air is admitted or applied under pressure at end **11** of the manifold **10**. As the liquor which has filled the manifold **10** by gravity feed is displaced by air, the connection **16** nearest end **11** is eventually at least partly exposed to the air. As the air is lighter than the liquor, it will rise given opportunity. As soon as the air reaches a connection **16**, therefore, it will rise in the connection. If there is a bottle secured to the connection, the air will pass up to the most elevated portions of the bottle. This action will permit liquor to flow or force it to flow depending on whether the system is pressurized or not. Since the bottles nearest the end **11** of manifold **10** will have air entering them first, they will always be emptied first. In the course of a very busy dispensing period, one or more bottles may be entirely empty long before the anticipated dispensing period is over. If it appears that may be the case, valves **18** for all empty bottles may be closed and new full bottles connected without disturbing the continuous operation of the system. In an event such as that described above, the dispensing period may end with only partially filled bottles on the device. These partially filled bottles may be replaced, at least in part, before a new dispensing period starts. The only partially filled bottles may then be used up at a time when a less than full bottle would seem to be adequate to complete a dispensing period.

The invention is defined as required by law in the following claims.

We claim:

1. A method of dispensing liquor comprising the steps of:

A. connecting a plurality of liquor bottles directly and separately to a common dispensing manifold,

B. providing a plurality of valves at least one of which is interposed between each bottle and the dispensing manifold

C. elevating one end of the manifold,

D. applying air pressure to the elevated end of the manifold,

E. opening valves to bottles the contents of which are to be then used and closing the valves to bottles not then to be used,

F. withdrawing liquor from the lower end of the manifold,

G. replacing empty bottles while continuing to withdraw liquor from the manifold and connecting liquor bottles;

whereby the bottles are emptied sequentially and independently beginning with bottles having open valves nearest to the elevated end of the manifold.

2. The method of claim 1 wherein the step D includes elevating the manifold until it assumes an angle of 25° to the horizontal.

3. A liquor-dispensing system comprising:

A. a manifold having one end elevated with respect to the other,

B. a plurality of valve members for connecting liquor bottles

to the manifold along its length; said bottles being connected separately in a manner such that the valve members can be closed allowing empty bottles to be removed while continuing to use the contents of those containing liquor,

C. an air inlet at the elevated end of the manifold having air pressure applied to it so that liquor which has filled the manifold is dispensed by said air pressure whereby air rises in the bottles so that bottles empty in a sequential pattern the one with an open valve nearest the elevated end of the manifold emptying first,

D. A liquor-dispensing outlet at the lower end of the manifold.

4. The system of claim 3 in which the manifold is elevated to be at an angle of 25° to the horizontal.

* * * * *