June 21, 1927. 1,632,781

W. BANGSER

MOUNTING FOR SEWING MACHINE MOTORS

Filed Dec. 10, 1925 2 Sheets-Sheet 1

Fig. 1.

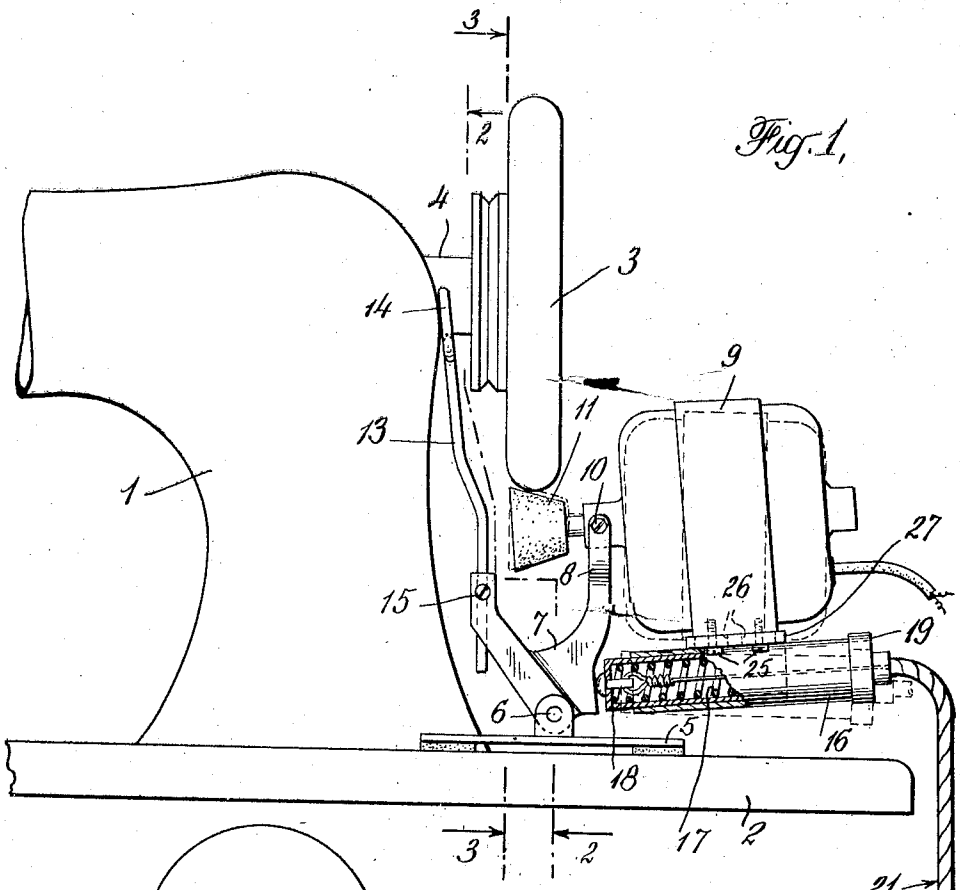

Fig. 2

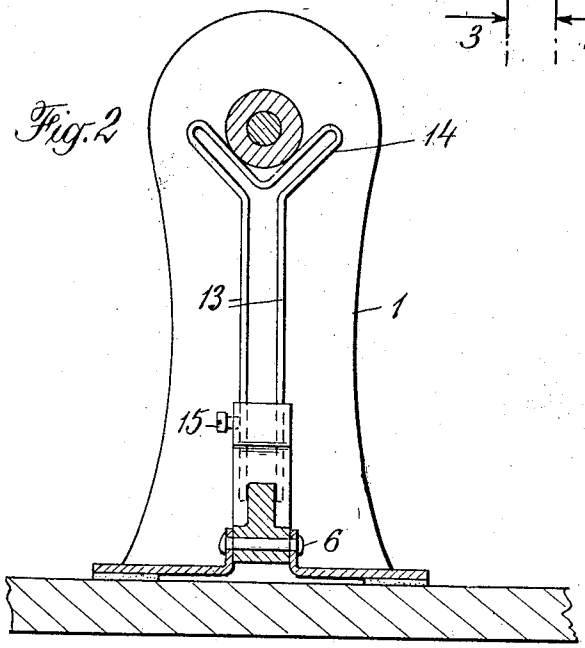

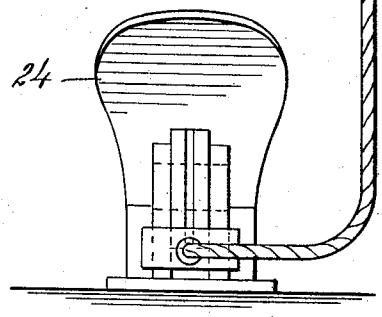

INVENTOR
William Bangser
BY
Pennie, Davis, Marvin & Edmonds
his ATTORNEYS

June 21, 1927. 1,632,781

W. BANGSER

MOUNTING FOR SEWING MACHINE MOTORS

Filed Dec. 10, 1925 2 Sheets-Sheet 2

Fig. 3.

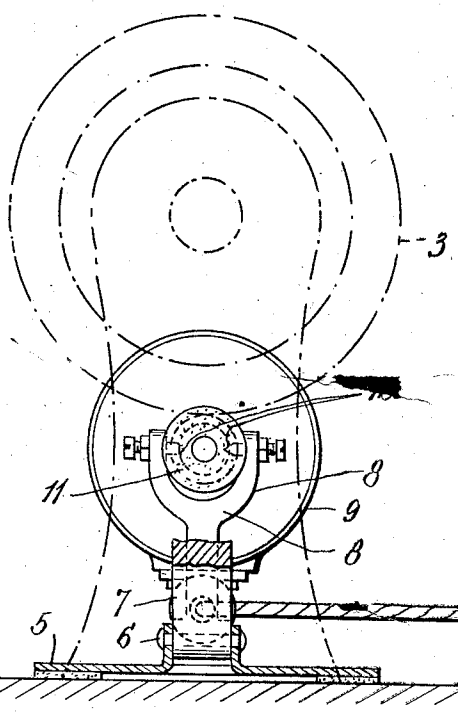

Fig. 4.

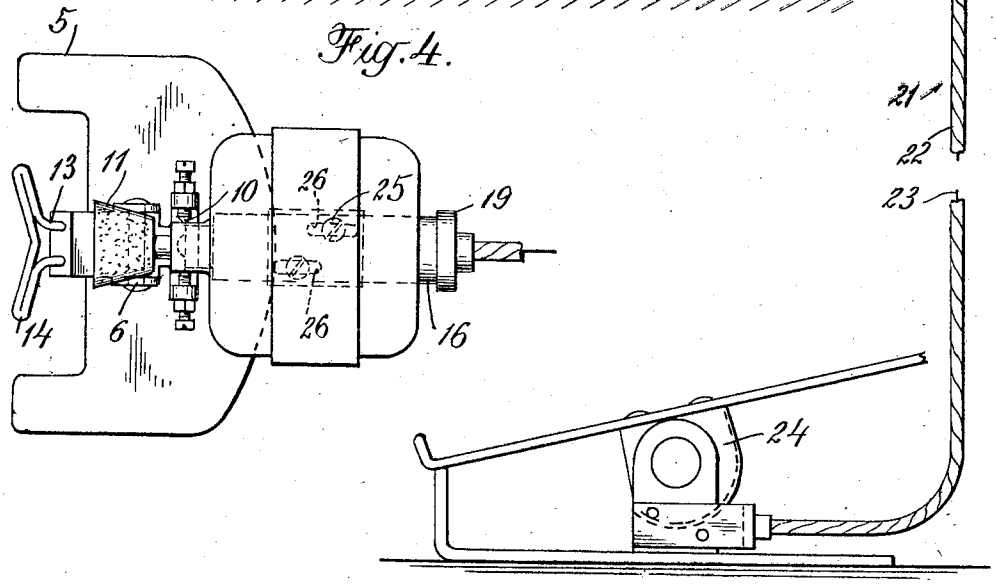

INVENTOR
William Bangser
BY
Pennie Davis, Marvin & Edmonds
ATTORNEYS

Patented June 21, 1927. 1,632,781

UNITED STATES PATENT OFFICE.

WILLIAM BANGSER, OF NEW YORK, N. Y., ASSIGNOR TO MAIMIN SPEED CONTROL CORPORATION, A CORPORATION OF NEW YORK.

MOUNTING FOR SEWING-MACHINE MOTORS.

Application filed December 10, 1925. Serial No. 74,493.

This invention relates to motor drives for sewing machines and more particularly to means for mounting the motor in driving relation to the machine.

It is common practice to drive sewing machines by means of small electric motors externally mounted adjacent the hand-wheel of the machine, driving either through frictional contact with the periphery of the hand-wheel or by means of a belt. Such drives when used in connection with commercial machines can be bolted to the table or otherwise permanently fixed in position; the problem of providing a mounting for the drive on a domestic sewing machine is not so simple. Such a mounting should be readily secured to all types of hand or foot-operated domestic sewing machines without the use of screws, bolts or other fastening means requiring the services of a mechanic and defacing the machine or its stand. It should be readily removable to permit closing or covering of the machine and yet hold the motor securely in position during use. It is an object of the present invention to provide such a mounting, particularly adapted for use in connection with domestic machines.

The speed of the sewing machine must be under control, and this control is commonly effected by varying the speed of the motor by means of a rheostat. The use of rheostats is objectionable for several reasons; they are expensive, they get out of order easily, and they do not, for the most part, give a smooth curve variation in the speed of the motor. I prefer to vary the speed of the machine, not by varying the speed of the motor held in fixed driving relation to the machine, but by varying the driving pressure between the motor and the machine while running the motor at constant speed. This variation in the driving pressure is effected by a controlled bodily movement of the motor relative to the machine. When the drive is a friction drive, the functional contact between the driving pulley of the motor and the hand-wheel of the machine is varied, and where the drive is a belt drive, the tension on the belt is varied. In order to limit the maximum driving pressure it has been proposed to employ the weight of the motor itself for exerting this pressure. This is commonly known as the gravity control and is illustrated in Patent No. 1,377,018 wherein is described a motor drive for sewing machines in which a motor running continuously at a constant speed is mounted adjacent the machine and constantly urged into driving relation by means of its own weight. This movement, however, is opposed by means of a spring which normally holds the motor in inoperative position and the force of which must be counteracted by the operator to permit the motor to move under its own weight into driving position. The effective driving pressure of the motor and hence the speed of the sewing machine can thus be nicely and easily controlled. It is a more specific object of the present invention to provide a motor mounting suitable for a drive in which the speed of the machine is varied by varying the driving pressure of the motor, and particularly adapted for a gravity control drive.

In attaining these objects I have mounted the motor upon a support intended to rest upon the table or stand of the machine and clamped in position between the table and the frame of the machine by means of an arm extending from the support and bearing against the frame. The motor is moved into driving relation with the machine by means of its own weight but is normally held out of driving relation by means of a spring under the control of the operator.

In the accompanying drawings I have illustrated a preferred embodiment of my invention. In these drawings Figure 1 is a side elevation of the right-hand end of a sewing machine showing a driving motor mounted adjacent the hand-wheel in accordance with the present invention, Figure 2 is a section taken along line 2—2 of Figure 1. Figure 3 is a section taken along line 3—3 of Figure 1, and Figure 4 is a plan view of the motor support and motor. The sewing machine illustrated in these figures comprises the usual frame 1 extending upward from a horizontal surface or table 2, and having a hand-wheel 3, the shaft of which is journaled within a boss 4 extending rearwardly from and forming an integral part of the frame. I shall now describe the motor drive and its mounting.

Resting upon the table to the right of the

frame and beneath the hand-wheel is a motor-supporting base member 5 on which is pivotally mounted at 6 a bracket 7 provided with a yoke 8 on which, in turn, the motor 9 is pivotally mounted at 10 in such a manner that the cone-shaped driving pulley 11 of the motor is positioned immediately below the handwheel 3. The shaft of the motor is in a plane with the axis of rotation of the hand-wheel and generally parallel thereto. The motor support is clamped in position on the table by means of a vertical arm 13 adjustably mounted on the bracket 7 and provided at its upper end with a yoke 14 which bears against the lower side of the boss 4. The arm 12 is held in vertical adjustment by means of a set screw 15. It will be observed that the center of gravity of the motor is well beyond the pivot point 6 on the far side of the frame so that the moment exerted by the weight of the motor about the point 6 tends to hold the yoke 14 firmly against the boss 4. Thus, although the motor support can be clamped between the frame and the table by means of manual adjustment of the arm 13, fixed by set screw 14, a tight contact between the arm and the boss, and between the base and table is always assured because of this moment exerted by the weight of the motor about the point 6. I shall now describe briefly the manner in which the gravity speed control principle is adapted to the motor drive of the present invention.

Secured to the lower part of the motor housing is a cylindrical casing 16 which houses a compression coil spring 17 and a cylindrical shell 18. The inner end of this coil spring bears against a cap 19 on the casing and the outer end against the bottom of the shell 18, which in turn bears against the bracket 7. The spring is so designed that, pressing against the fixed bracket 7 through the end of the shell 18, it opposes the weight of the motor and normally holds it tilted about its pivot in the position illustrated in full lines in the drawing, the driving pulley being thus held out of contact with the hand-wheel as shown. In order to permit the motor to swing downward about its pivot and move the driving pulley into contact with the hand-wheel it is necessary to compress the spring. This is done by means of a Bowden wire 21 under the control of the operator. This Bowden wire comprises the usual casing 22 and inner wire 23. The upper end of the wire 23 is secured to the bottom of the shell 18 and the lower end to a treadle 24. The operator by pressing the outer end of the treadle downward exerts a pull on the wire 23 which, acting through the shell 18, compresses the spring 17, thus overcoming the effectiveness of that spring and permitting the motor to swing its driving pulley into contact with the hand-wheel. The driving pressure exerted by the driving pulley against the hand-wheel can thus be controlled by the operator and the speed of the machine regulated accordingly.

By making the pulley in the form of a truncated cone, with its big end toward the machine, the contact between the rounded periphery of the hand-wheel and the pulley is one of true tangency. As the pressure increases this contact may develop into a small area, but the increase in the effective driving pressure is constant. With a grooved pulley this might not be the case. The pulley, shaped and positioned as illustrated, also tends to move the motor toward the machine and hence tighten the clamping action exerted by the support and the arm 13.

The spring casing 16 is adjustably mounted on the motor housing by means of a pair of set screws extending through longitudinal slots 26 in a plate 27 affixed to or integral with the spring casing. By adjusting the position of the casing relative to the motor the normal angular elevation of the latter can be controlled and the drive thus made comformable to hand-wheels of different diameters. Setting of the entire drive can of course be made to bring the driving pulley 11 into proper longitudinal relation to the hand-wheel.

No matter in what position the motor finds iself, the motor support is firmly clamped between the head and the table and permits of all of the fine adjustments inherent in the gravity control principle. The mounting of the present invention is quickly and easily placed in position and just as easily and quickly removed. Any housewife can readily do these things and readily operate the drive when in position. Furthermore, there is nothing about the mounting requiring the use of any permanent fixture on the sewing machine and nothing which can in any way mar or scratch it.

I claim:

1. In a sewing machine having a frame and a table, the combination of motor-supporting base resting on the table adjacent the frame, a bracket pivotally mounted on the base, a motor mounted on the bracket with its center of gravity beyond the pivot on the far side of the frame, and means extending from the bracket and bearing against the frame for clamping the base between the frame and the table.

2. In a sewing machine having a table, a frame and a boss on the frame, the combination of a support for a motor, a motor on the support, and an arm extending upward from the support and bearing against the boss for clamping the support between the table and the boss.

3. In a sewing machine having a hand-wheel, a frame, a boss on the frame in which

the hand-wheel shaft is journaled, and a table, the combination of a support for a motor resting on the table, a motor on the support, a driving pulley on the motor contacting with the hand-wheel, and a vertical arm extending upward from the support and bearing against the boss.

4. In a sewing machine having a hand-wheel, a frame and a table, the combination of a support for a motor resting on the table, a motor pivotally mounted on the support with its axis generally parallel with the axis of rotation of the hand-wheel, a driving pulley on the motor positioned below the hand-wheel and urged into contact therewith by the weight of the motor, means for clamping the support between the table and the frame, a spring opposing the weight of the motor and normally holding the driving pulley out of contact with the hand-wheel, and means under the control of the operator for counteracting the force of the spring and permitting the weight of the motor to move the driving pulley into driving contact with the hand-wheel.

5. In a sewing machine having a table, a frame and boss on the frame, the combination of a motor base resting on the table, a supporting bracket pivotally mounted on the base, a motor mounted on the bracket with its center of gravity beyond the base pivot on the far side of the frame, an arm mounted on the bracket and contacting with the boss, and means for moving the motor into and out of driving relation to the machine.

6. A motor drive for a sewing machine having a frame, a hand-wheel and a table, comprising the combination of a motor, a driving pulley on the motor, a support for the motor, means for clamping the support between the frame and the table with the driving pulley adjacent the hand-wheel and constantly urged into contact therewith by the weight of the motor, a spring carried by the motor normally opposing the weight of the motor and holding the driving pulley out of contact with the hand-wheel and means under the control of the operator for counteracting the effect of the spring.

7. In a sewing machine having a frame, a hand-wheel and a table, the combination of a motor support clamped between the frame and the table, a motor pivotally mounted on the support beyond and below the hand-wheel about an axis transverse to its own axis of rotation, the axis of rotation of the motor being in a vertical plane with the axis of rotation of the hand-wheel, and a frustro-conical driving pulley on the motor positioned to contact with the hand-wheel the large end of the pulley being between the point of contact and the frame of the machine.

8. A motor drive for a sewing machine having a frame, a hand-wheel and a table, comprising the combination of a motor, a driving pulley on the motor, a support for the motor holding the driving pulley adjacent the hand-wheel and constantly urged into contact therewith by the weight of the motor, a spring carried by the motor normally opposing the weight of the motor and holding the driving pulley out of contact with the hand-wheel and means under the control of the operator for counteracting the effect of the spring.

9. A motor drive for a sewing machine having a frame, a hand-wheel and a table, comprising the combination of a motor, a driving pulley on the motor, a support for the motor holding the driving pulley adjacent the hand-wheel and constantly urged into contact therewith by the weight of the motor, a spring carried by the motor abutting against a fixed element normally opposing the weight of the motor and holding the driving pulley out of contact with the hand-wheel, means permitting adjustment of the spring relative to the motor, and means under the control of the operator for counteracting the effect of the spring.

In testimony whereof I affix my signature.

WILLIAM BANGSER.