July 3, 1962 R. L. McINTYRE 3,041,758

PORTABLE ELECTRIC PUFF IRONS

Filed Aug. 1, 1961

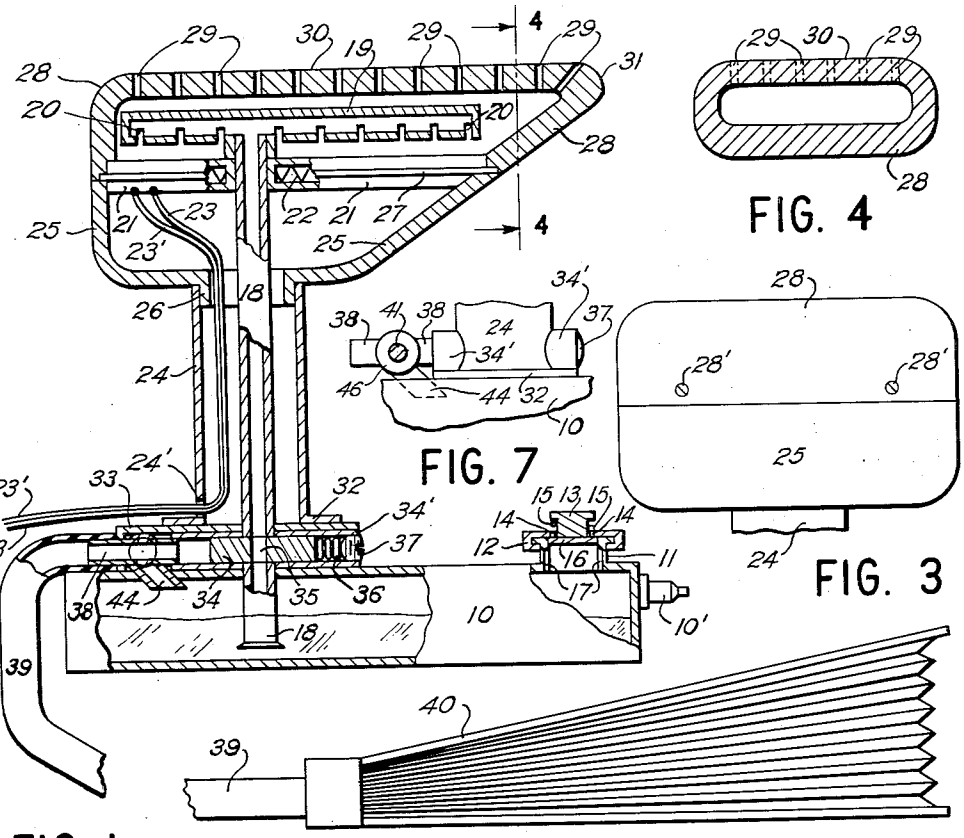

FIG. 1

FIG. 4

FIG. 3

FIG. 7

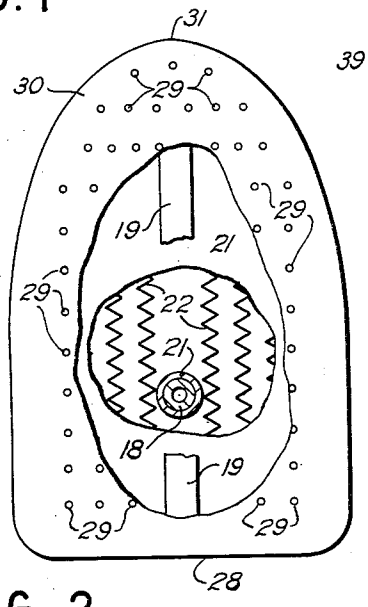

FIG. 2

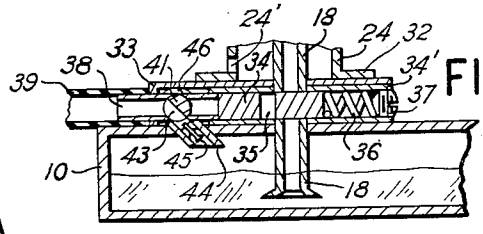

FIG. 5

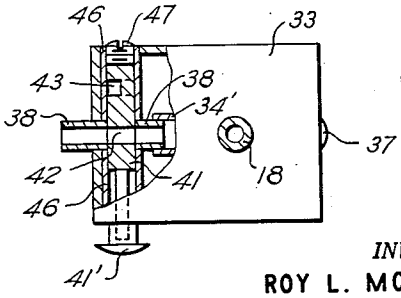

FIG. 6

INVENTOR.
ROY L. MC INTYRE
BY Loyal H. McCarthy
ATTORNEY.

United States Patent Office

3,041,758
Patented July 3, 1962

3,041,758

PORTABLE ELECTRIC PUFF IRONS

Roy L. McIntyre, 17520 SW. Redfern Ave., Lake Grove, Oreg.

Filed Aug. 1, 1961, Ser. No. 128,422
2 Claims. (Cl. 38—99)

My invention relates to portable electric steam puff irons which embody a water reservoir and means for controlling the application of the water to the heating element for generating steam in the operation of the puff iron.

One object of my invention is to provide a portable electric steam puff iron which contains its own water reservoir and means for applying pressure to the water within the reservoir and for controlling the supply water to its heating element.

Another object of my invention is to provide a portable electric puff iron having a means for applying pressure to the reservoir thereof, which means may also be used to effect and control the generation of steam by the puff iron.

A further object of my invention is to provide a portable, electric puff iron, utilizing low pressure steam, which will be simple in operation and which is capable of home or commercial uses.

Other and further objects of my invention will be apparent from the drawings, specification and claims, as hereinafter set forth.

Referring to the drawings:

FIG. 1 is a side elevation of my steam puff iron with portions thereof broken away, showing details of the iron head, the water distributor and the supply pipe, the heating element, the valves assembly unit and the selector switch and valve therein, the base tank and the pressure release cap and showing the source of compressed air.

FIG. 2 is a top plan view of the head portion of the puff iron, with portions thereof broken away, showing the steam vent holes, the water distribution head and the water supply line, and the electrical resistance wires of the heating element.

FIG. 3 is an end elevation view from the rear of the head portion of the puff iron.

FIG. 4 is a cross sectional view of the head of the puff iron along line 4—4 of FIG. 1 in the direction of the arrows.

FIG. 5 is a fragmentary cross sectional detail view of the reservoir, the water supply pipe, the selector switch for controlling admission of air to the reservoir with the switch in position to admit air to the reservoir, and the sliding valve controlling water supply from the reservoir to the distributor head with the latter valve in position to close off the supply of water.

FIG. 6 is a detail plan view, with parts thereof broken away, of the valves assembly unit, showing the selector switch in position to direct pressure to the water supply sliding valve with the said valve in the fully open position for admitting water to the water distributor head.

FIG. 7 is a fragmentary detail view of an alternate mounting for the sliding valve and selector switch.

Referring further to the drawings:

The base **10** is a closed, air-tight and water-tight tank, preferably polyhedronal in shape. A fill pipe **11** is positioned on the top surface of the base **10** near one end thereof and is provided with a sealing cap **12**. The sealing cap **12** is provided with a pressure release button **13** concentrically positioned. A plurality of air escape holes **14** are positioned concentrically around the pressure release button **13**. A tensioning spring **15** is positioned between the top of the sealing cap **12** and the flange of the pressure release button **13** so as to hold the same in the

closed position. A valve disc **16** is secured to the lower end of the pressure release button **13** inside the sealing cap **12** so that it closes off the air escape holes **14** when the pressure release button **13** is in the closed position. A plurality of channeled air passages **17** are positioned around the inner peripheral surface of the fill pipe **11** in spaced relation and extend from a point just below the valve disc **16**, when in the closed position, to the interior of the base tank **10**. They are so arranged that depressing the pressure release button **13** will move the valve disc **16** downwardly into such a position within the fill pipe **11** that air under pressure within the base tank **10** will escape through the channeled air passages **17** around the valve disc **16** and through the air escape holes **14** in the sealing cap **12**. An automatic safety valve **10'** is optional and may be placed on the tank **10**, cap **12** or made a part of the release button **13**.

Spaced apart from the fill pipe **11** on the top surface of the base tank **10**, a water supply pipe **18** extends vertically from within the tank **10** through a hole in the top of the base tank **10**, making an air-tight seal therewith, and continues upwardly to terminate in a water distributor head **19** which is provided with a plurality of water outlets **20** so positioned as to direct water passing therethrough downwardly onto an encased heating element **21** encircling the supply pipe **18**, forming an air- and water-tight seal therewith, below the distributor head **19**. The encased heating element **21** has resistant, heat generating wires **22** coiled within it. Electric supply wires **23—23'** are attached to the encased heating element **21**, preferably near the lower surface thereof, so as to supply a flow of electric current from a source of electricity to the resistant wires **22** coiled within the encased heating element **21**. The electric supply wires **23—23'** are contained within a standard **24** which also encloses the water supply pipe **18** and supports the lower portion **25** of the puff iron head. The puff iron head may be provided with suitable attachment means, such as a depending collar **26** which is press-fitted to the top end of the standard **24** to secure the two elements together or which may have screws inserted through holes in the upper end of the standard **24** and threaded into the depending collar **26** positioned therewithin, or any other suitable attachment means may be employed. A flange **27**, medially of the depth thereof, circumscribes and is secured to the encased heating element **21** and seats upon a portion of the top edge of the lower half **25** of the head of the puff iron. The upper portion **28** of the puff iron head mates with the flange **27** and the heating element **21** so as to form a tight joint with the upper surfaces of the lower portion **25** of the puff iron head at its outer peripheral margin. A plurality of steam holes **29** are positioned in the upper surface **30** of the upper portion **28** of the puff iron head with the holes being preferably arranged so as to enable steam also to escape near point **31** of the upper surface **30** of the puff iron head. If necessary, or desired, the flange **27** of the encased element **21** may be secured to the upper surfaces of the lower portion **25** of the puff iron head by means of cap screws, etc. The upper portion **28** of the puff iron head may be secured by screws **28'** or engaging lips and slots, etc., to the lower portion **25** of the puff iron head. The lower end of the standard **24**, the end thereof opposite from the puff iron head, is provided with any suitable means of attachment such as circumferential flange **32** disposed thereto at right angles to enable securing the standard firmly upon the upper surface of the valves assembly unit **33**. An access opening **24'** is positioned in standard **24** above flange **32** to accommodate wires **23—23'**.

The valves assembly unit **33** surrounds and encases the water supply pipe **18** by means of an air- and water-

tight joint. Positioned within and disposed longitudinally of the valves assembly unit 33, a sliding valve 34, provided with a hole 35 disposed vertically therethrough, intersects the water supply pipe 18. The valve housing 34' for valve 34 may be separate from or an integral part of the valves assembly unit 33. A spring 36 butts against one end of the sliding valve 34 and is retained in position by means of a screw 37 or other suitable means. The spring 36 will hold the sliding valve 34 against the inner end of a compressed air access means, such as a nipple 38 when valve 34 is not subjected to pressure from the air access means.

An air supply hose 39 is secured upon the outer end of the nipple 38 and connected to the outlet of a source of, means supplying, compressed air 40, such as a bellows, pump, etc., which may be either manually, pedally or automatically operated. The nipple 38 is intersected by a selector switch 41, positioned within the valves assembly unit 33, which may be either a rotary or push-pull type. The disclosed embodiment depicts a push-pull type selector switch 41, having a removable knob 41' disposed on the outer end thereof, with two separate air passageways therethrough. The transverse air passageway 42 is so disposed as to align axially with the passageways within the segments of the nipple 38 on each side of the selector switch 41. The angularly disposed passageway 43 forms an angle, preferably of 45 degrees, with the passageway through the outer segment of nipple 38 and, when it is aligned in the nipple 38, deflects air passing through the outer segment of nipple 38 into spout 44 which terminates within the base tank 10. The spout 44 preferably, but not necessarily, contains a check valve 45 which prevents compressed air seepage regardless of the positioning of selector valve 41. A close tolerance fit for the moving parts of the selector valve 41 and the customary construction of such valves, however, is felt to be sufficient for purposes of this invention to prevent air pressure leaks. The selector valve 41 is provided with a housing 46 which may be separate from or an integral part of the valve assembly unit 33. A stop screw 47, preferably of the headless type, is disposed in the opposite end of housing 46 from the knob 41'. Screw 47 serves as an adjustment and stop means for selector valve 41. If desired, the valves assembly unit may be eliminated and the valve housing 34' may be mounted in the standard 24. In this arrangement the selector switch valve housing 46 could be positioned on top of the base tank 10 transversely to the housing 34'.

In operation of my device the base tank 10 is partially filled with water through fill pipe 11. Sealing cap 12 is then seatedly engaged upon the fill pipe 11 and the selector valve 41 is positioned so that the angular passageway 43 thereof intersects the passage through nipple 38 to connect said passage with inlet spout 44 opening within base tank 10 at a point above the water level therein. The source of compressed air 40 is then activated, such as by pedal operation of a bellows, thereby forcing air through air supply line 39 into nipple 38, through passage 43 of the selector valve 41, inlet spout 44 and check valve 45 into the base tank 10 above the level of the water therein. The source of compressed air 40 is continued in operation until the desired pressure is obtained within the base tank 10. The pressure attained should be sufficient to force water upwardly through the passage of the water supply line 18 and into the distributor head 19 at the upper end thereof. When the necessary and desired pressure has been attained within the base tank 10, the selector switch 41 is moved into position for its passage 42 to align with both passageways through the segments of the nipple 38. When the selector valve 41 is so positioned, continued operation of the source of compressed air 40 will direct air under pressure against the end of slide valve 34 which is nearest to the inner end of nipple 38. The air pressure will

overcome the tension supplied by the spring 36 at the opposite end of valve 34 and move said valve against a stop means, which may be the completely compressed spring 36, in which position the vertical passageway 35 through the valve 34 will align with the passageways within the segments of the water supply pipe 18. In this position the pressure within the base tank 10 will force water upwardly through the water supply pipe 18 and through the outlets 20 of the distributor head 19. Since the distribution head is positioned above the heating element 21, water disbursed onto the surface of the element 21, which has been heated by means of connecting the electric supply wires 23—23' into source of electrical energy, will be converted into steam which will escape through the steam vent holes 29 through the surface 30 of the upper portion 28 of the puff iron head. Since there is no check valve in the inner end of nipple 38, relasing the pressure applied by the source of compressed air 40 will enable the spring 36 to force the passageway 35 of valve 34 out of alignment with the passageway through water supply pipe 18. The supply of water to the distributor head 19 and its outlets 20 is thereby cut off and the generation of steam ceases. This arrangement enables controlling steam as it is required during the operation of the puff iron.

After use the pressure release button 13 of the sealing cap 12 may be depressed, so that pressure remaining in base tank 10 may escape through channeled air passages 17 and air escape holes 14. Sealing cap 12 may then be removed and base tank 10 emptied of water remaining therein.

It is obvious that during the operation of the puff iron one may alternately move the selector valve to the appropriate position for purposes of replenishing pressure within the tank or of controlling the generation of steam within the head of the puff iron. It is also obvious that variations from the particular embodiment, as disclosed herein, are feasible without departing from the spirit and scope of my invention. I am, therefore, not to be understood as limiting myself to the specific embodiment herein disclosed, which is merely a presently preferred form thereof.

Having thus described my invention, I claim:

1. In a portable electric steam puff iron: a hollow, closed base tank having a fill pipe; a removable pressure sealing cap complementary to said fill pipe, said cap being provided with manual pressure release means; automatic safety means for said base tank; a valves assembly unit secured on said base tank; a water supply pipe extending upwardly from within said base tank through said valves assembly unit to a point above said base tank; a water distributor containing a plurality of water outlets secured on the upper end of said water supply pipe; an encased electrical heating element circumscribing said water supply pipe at a point below said water distributor; a selector switch positioned within said valves assembly unit; air access means intersecting said selector switch and having its outer end extending beyond said valves assembly unit; a sliding valve engaging with the inner end of said air access means and having a vertical opening disposed therethrough, said sliding valve intersecting said water supply pipe; an inlet spout between said selector switch and the interior of said base tank; a check valve positioned within said inlet spout; means for supplying compressed air; an air supply hose connecting with said outer end of said air access means and said means for supplying compressed air; a standard secured on top of said valves assembly unit and encasing said water supply pipe; and an head consisting of upper and lower portions, said lower portion secured to the upper end of said standard and supporting said encased heating element, said upper portion having a plurality of steam vent holes through its upper surface and seatedly engaging said lower portion, said head portions enclosing said heating element and said water distributor.

2. In a portable electric steam puff iron: a hollow, closed base tank having a fill pipe; a removable pressure sealing cap complementary to said fill pipe; manual pressure release means for said base tank; automatic safety means for said base tank; a water supply pipe extending upwardly from within said base tank to a point above said base tank; a water distributor containing a plurality of water outlets secured on the upper end of said water supply pipe; an encased electrical heating element circumscribing said water supply pipe at a point below said water distributor; a standard secured on top of said base tank and encasing said water supply pipe; a sliding valve having a vertical opening therethrough, disposed through said standard and intersecting said water supply pipe; means for supplying compressed air; air access means having one end connected to said sliding valve and having its other end connected to said means for supplying compressed air; a selector switch intersecting said air access means; an inlet spout between said selector switch and the interior of said base tank; a check valve positioned within said inlet spout; and an head consisting of an upper portion having an upper surface with a plurality of steam vent holes therethrough and a lower portion secured to the upper end of said standard and engaging with said upper portion, said upper and lower portions of said head enclosing said heating element and said water distributor.

References Cited in the file of this patent

UNITED STATES PATENTS

514,601	Mandot	Feb. 13, 1894
2,501,628	Glover	Mar. 21, 1950