US010637233B2

(12) **United States Patent**
Hao

(10) **Patent No.: US 10,637,233 B2**
(45) **Date of Patent: Apr. 28, 2020**

(54) **FAULT MAGNITUDE CALCULATION DURING CURRENT TRANSFORMER SATURATION**

(71) Applicant: **Schweitzer Engineering Laboratories, Inc.**, Pullman, WA (US)

(72) Inventor: **Kei Hao**, Pullman, WA (US)

(73) Assignee: **Schweitzer Engineering Laboratories, Inc.**, Pullman, WA (US)

(*) Notice: Subject to any disclaimer, the term of this patent is extended or adjusted under 35 U.S.C. 154(b) by 85 days.

(21) Appl. No.: **16/010,044**

(22) Filed: **Jun. 15, 2018**

(65) **Prior Publication Data**

US 2019/0386485 A1 Dec. 19, 2019

(51) **Int. Cl.**

H02H 7/22	(2006.01)
H02H 1/00	(2006.01)
G05B 19/042	(2006.01)

(52) **U.S. Cl.**

CPC ***H02H 7/22*** (2013.01); ***G05B 19/0428*** (2013.01); ***H02H 1/0007*** (2013.01); ***H02H 1/0092*** (2013.01); *G05B 2219/2639* (2013.01)

(58) **Field of Classification Search**

CPC H02H 7/22; H02H 1/0007; H02H 1/0092; G05B 19/0428; G05B 2219/2639

See application file for complete search history.

(56) **References Cited**

U.S. PATENT DOCUMENTS

5,974,361	A *	10/1999	Vu	H02H 1/046 324/620
6,040,689	A *	3/2000	Gluszek	G01R 19/15 324/102
9,250,282	B2	2/2016	Ukil et al.	
9,366,715	B2	6/2016	Ukil et al.	
2013/0141827	A1	6/2013	Ukil et al.	
2013/0221977	A1*	8/2013	Ukil	H02H 3/081 324/522

FOREIGN PATENT DOCUMENTS

CA	2929382	A1 *	5/2014
CN	106099850	A *	11/2016

OTHER PUBLICATIONS

Chothani et. al., "New Algorithm for current transformer saturation detection and compensation based on derivatives of secondary currents and Newton's backward difference formulae", IET Gener. Transco. Distrib., 2014, vol. 8, Iss. 5, pp. 841-850. (Year: 2014).*

(Continued)

Primary Examiner — Thomas C Lee
Assistant Examiner — Michael Tang
(74) *Attorney, Agent, or Firm* — Richard M. Edge

(57) **ABSTRACT**

Improvements in the functioning of a line-mounted device to calculate a fault current magnitude during current transformer (CT) saturation are disclosed herein. The line-mounted device may determine direct current (DC) components of a sampled current signal using valid sample pairs obtained during unsaturated regions of peaks of the sampled current signal. The DC components may be removed from the sampled current signal to produce a sinusoidal current signal. The fault current magnitude may be calculated using the sinusoidal current signal with the DC components removed.

20 Claims, 8 Drawing Sheets

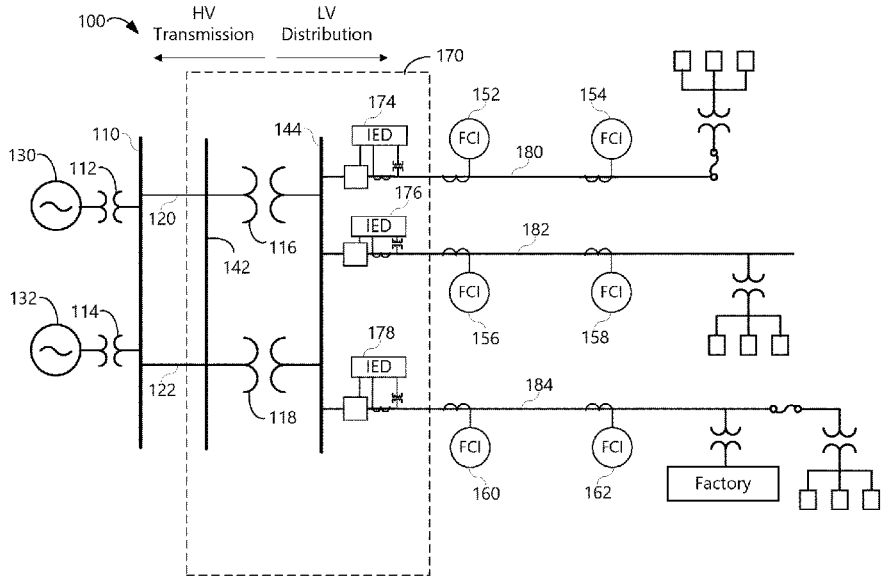

(56) **References Cited**

OTHER PUBLICATIONS

Ukil, Abhisek, et al., "Current-Only Directional Overcurrent Relay". IEEE Sensors Journal, Nov. 22, 2010, vol. 11, Issue 6.
Ukil, Abhisek, et al., "Current-Only Directional Overcurrent Protection for Distribution Automation: Challenges and Solutions". IEEE Transactions on Smart Grid, Aug. 22, 2012, vol. 3, Issue 4.

* cited by examiner

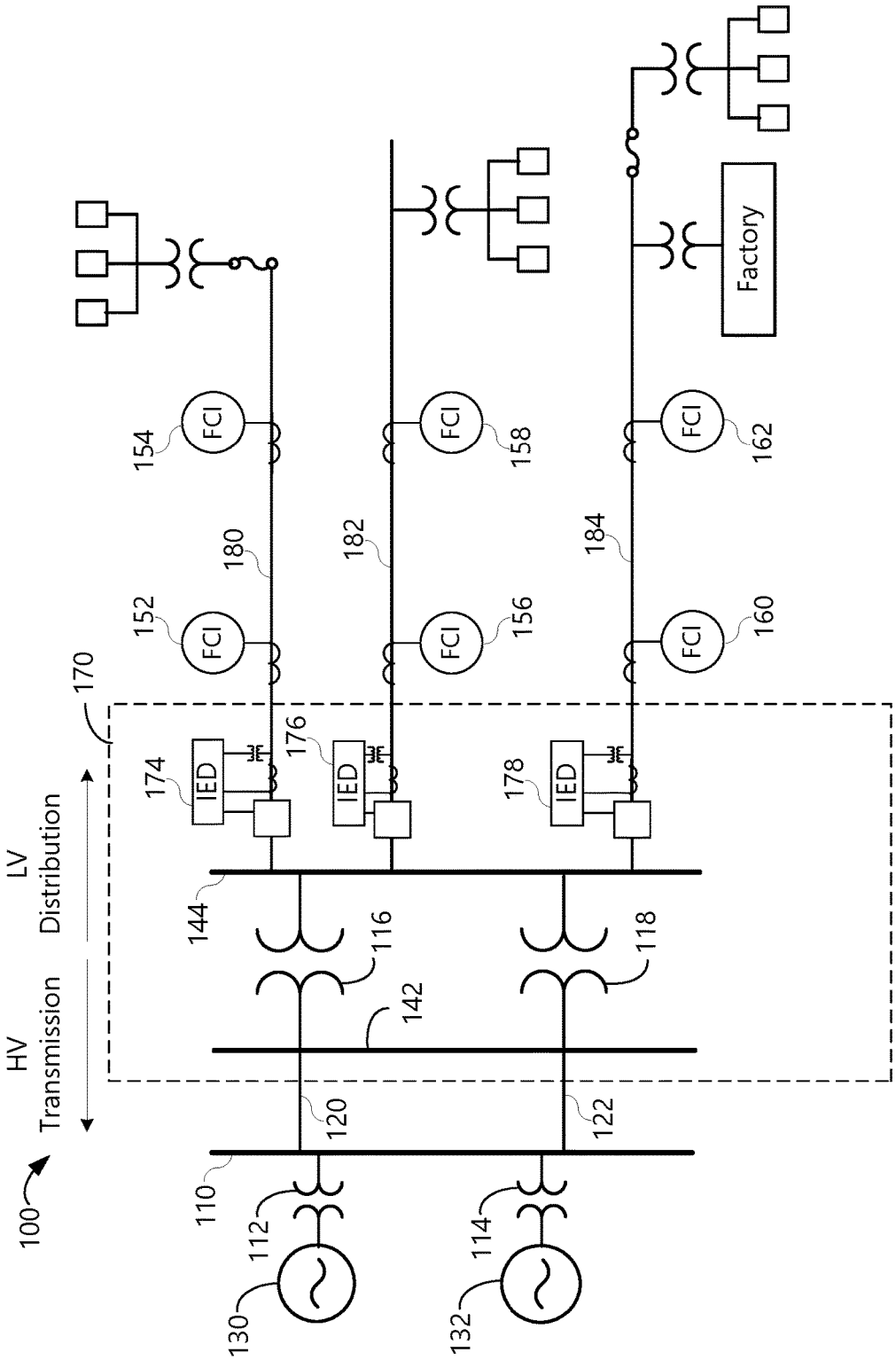
100
HV
Transmission
LV
Distribution
170
110
112
114
130
132
120
122
142
116
118
144
174
176
178
IED
IED
IED
152
154
156
158
160
162
FCI
FCI
FCI
FCI
FCI
FCI
180
182
184
Factory

Figure 1

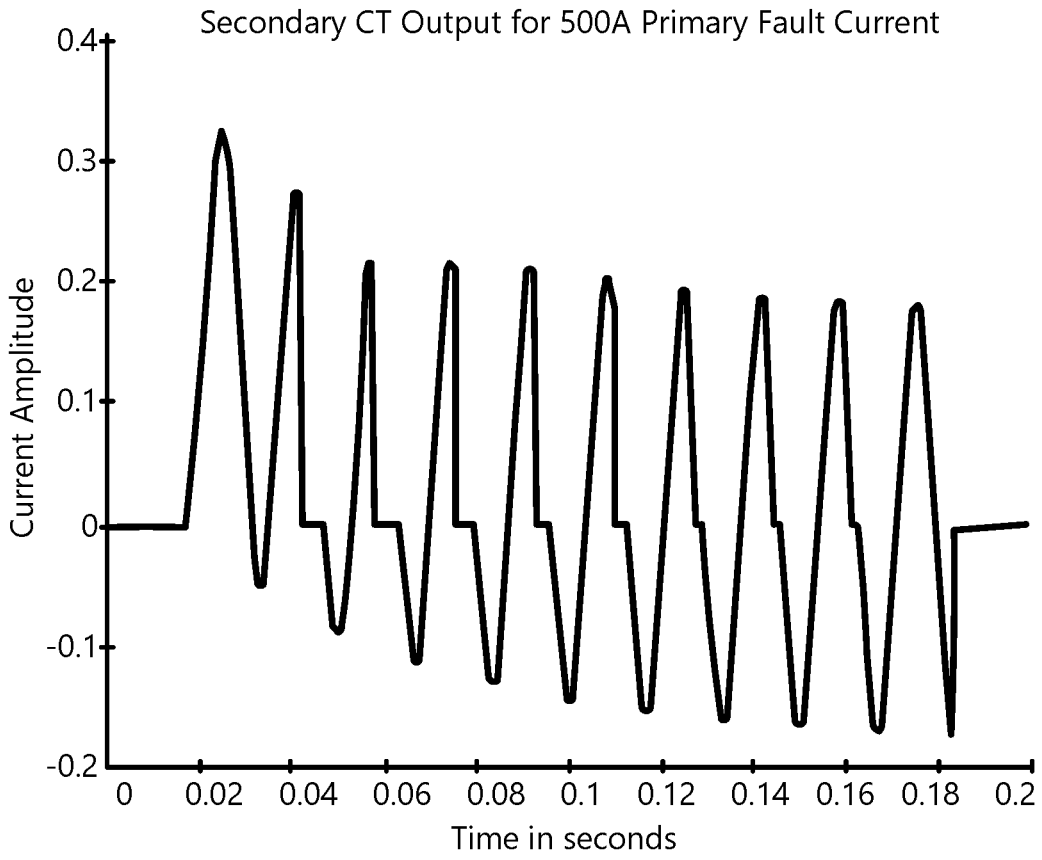
Secondary CT Output for 500A Primary Fault Current
Current Amplitude
0.4
0.3
0.2
0.1
0
-0.1
-0.2
0
0.02
0.04
0.06
0.08
0.1
0.12
0.14
0.16
0.18
0.2
Time in seconds

Figure 2A

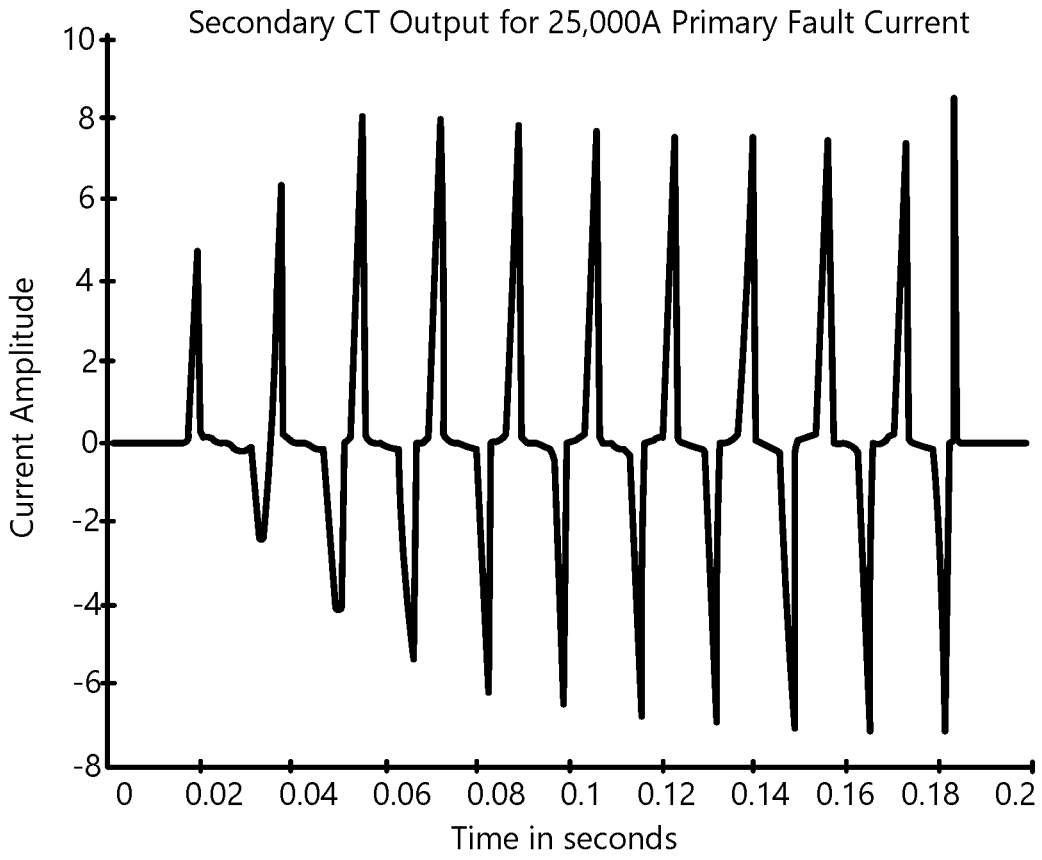
Secondary CT Output for 25,000A Primary Fault Current
Current Amplitude
10
8
6
4
2
0
-2
-4
-6
-8
0
0.02
0.04
0.06
0.08
0.1
0.12
0.14
0.16
0.18
0.2
Time in seconds

Figure 2B

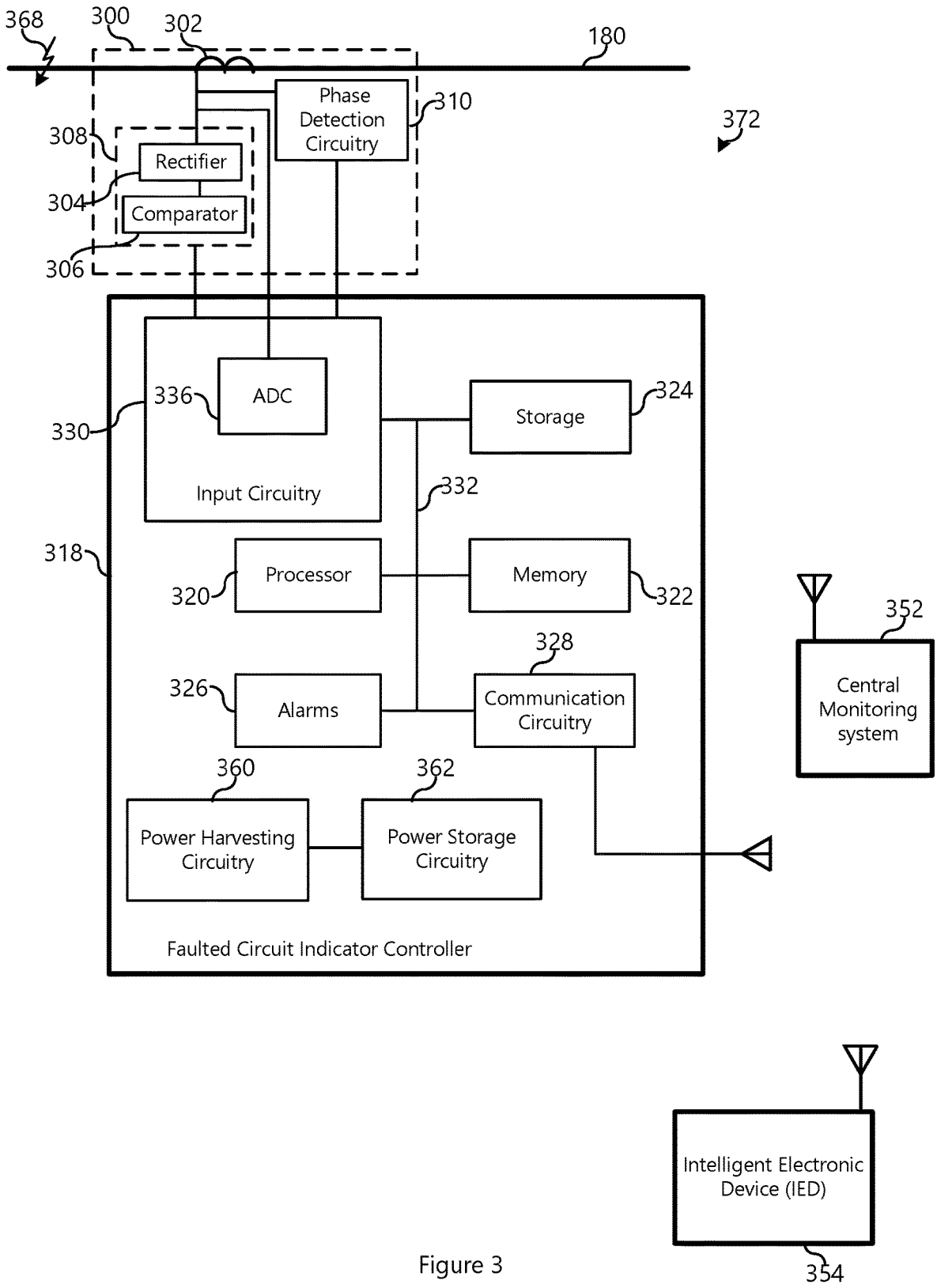
368
300
302
180
Phase Detection Circuitry
310
372
308
Rectifier
304
Comparator
306
336
ADC
330
Input Circuitry
Storage
324
332
318
Processor
320
Memory
322
352
328
326
Alarms
Communication Circuitry
Central Monitoring system
360
362
Power Harvesting Circuitry
Power Storage Circuitry
Faulted Circuit Indicator Controller
Intelligent Electronic Device (IED)
354

Figure 3

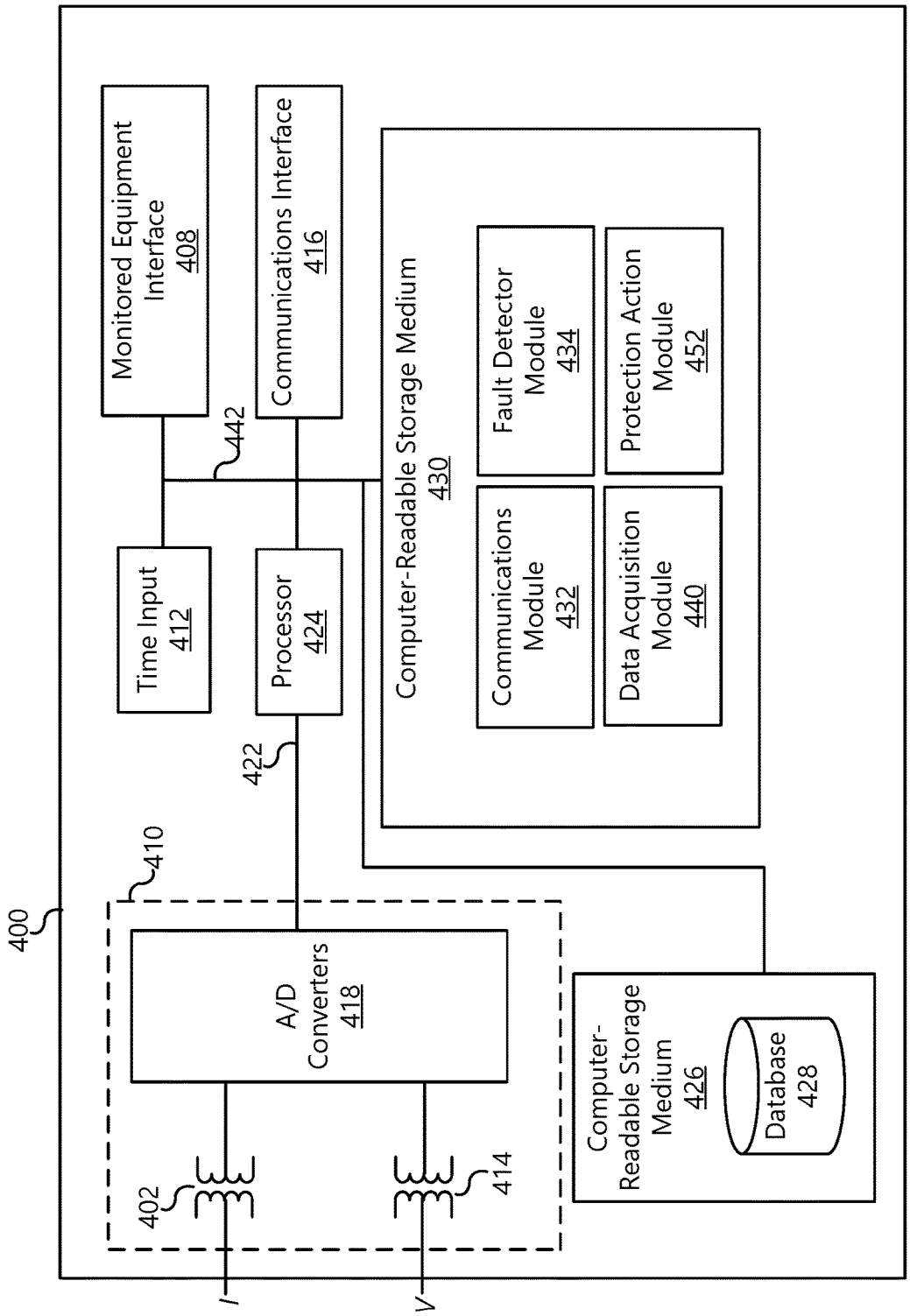
400
Monitored Equipment Interface 408
Communications Interface 416
442
Time Input 412
Processor 424
422
410
A/D Converters 418
402
414
I
V
Computer-Readable Storage Medium 430
Fault Detector Module 434
Protection Action Module 452
Communications Module 432
Data Acquisition Module 440
Computer-Readable Storage Medium 426
Database 428

Figure 4

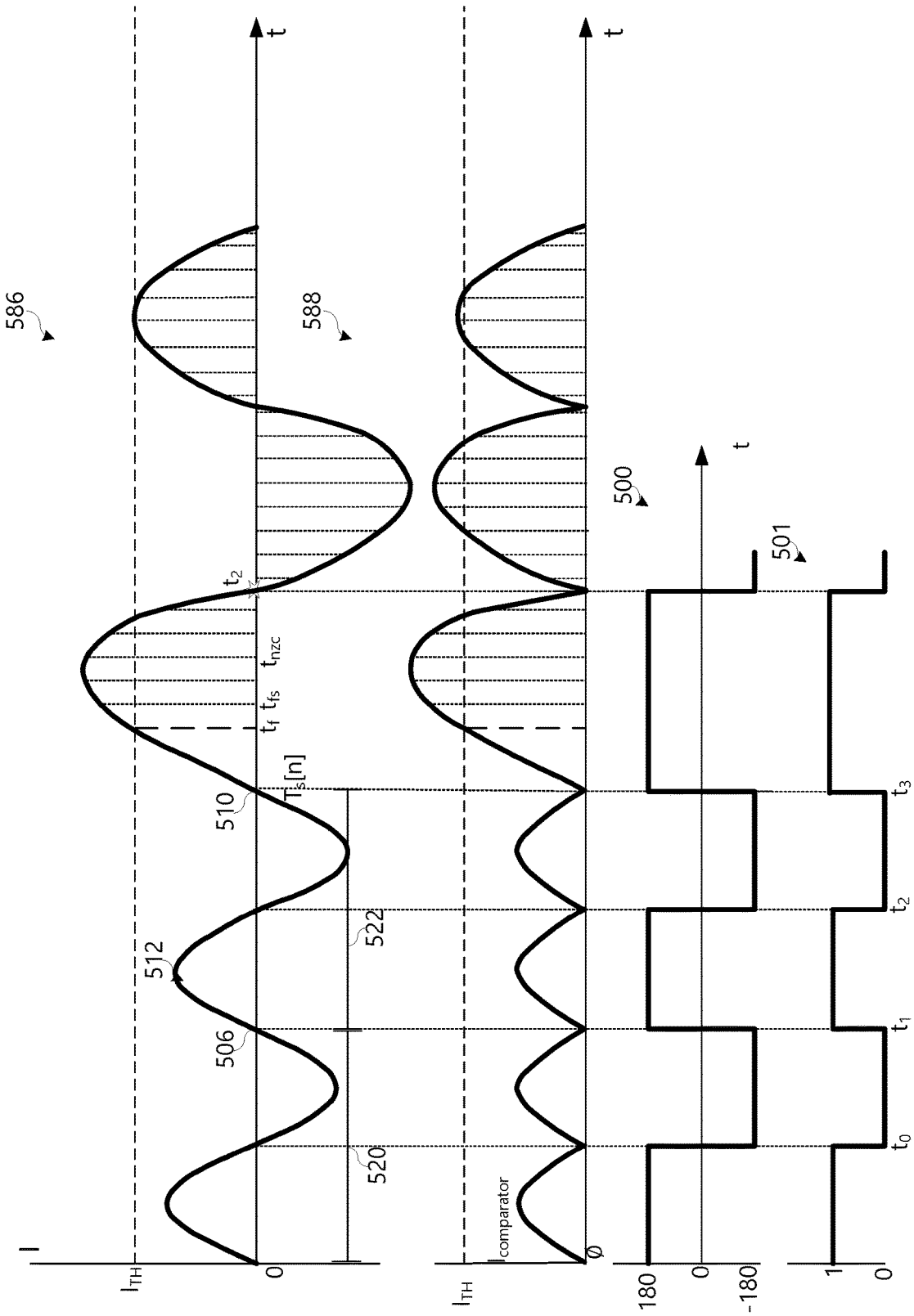
586
588
500
501
I
t
I_{TH}
0
$I_{comparator}$
180
-180
1
t_0
t_1
t_2
t_3
t_2
t_f
t_{fs}
t_{nzc}
$T_s[n]$
510
512
506
520
522

Figure 5

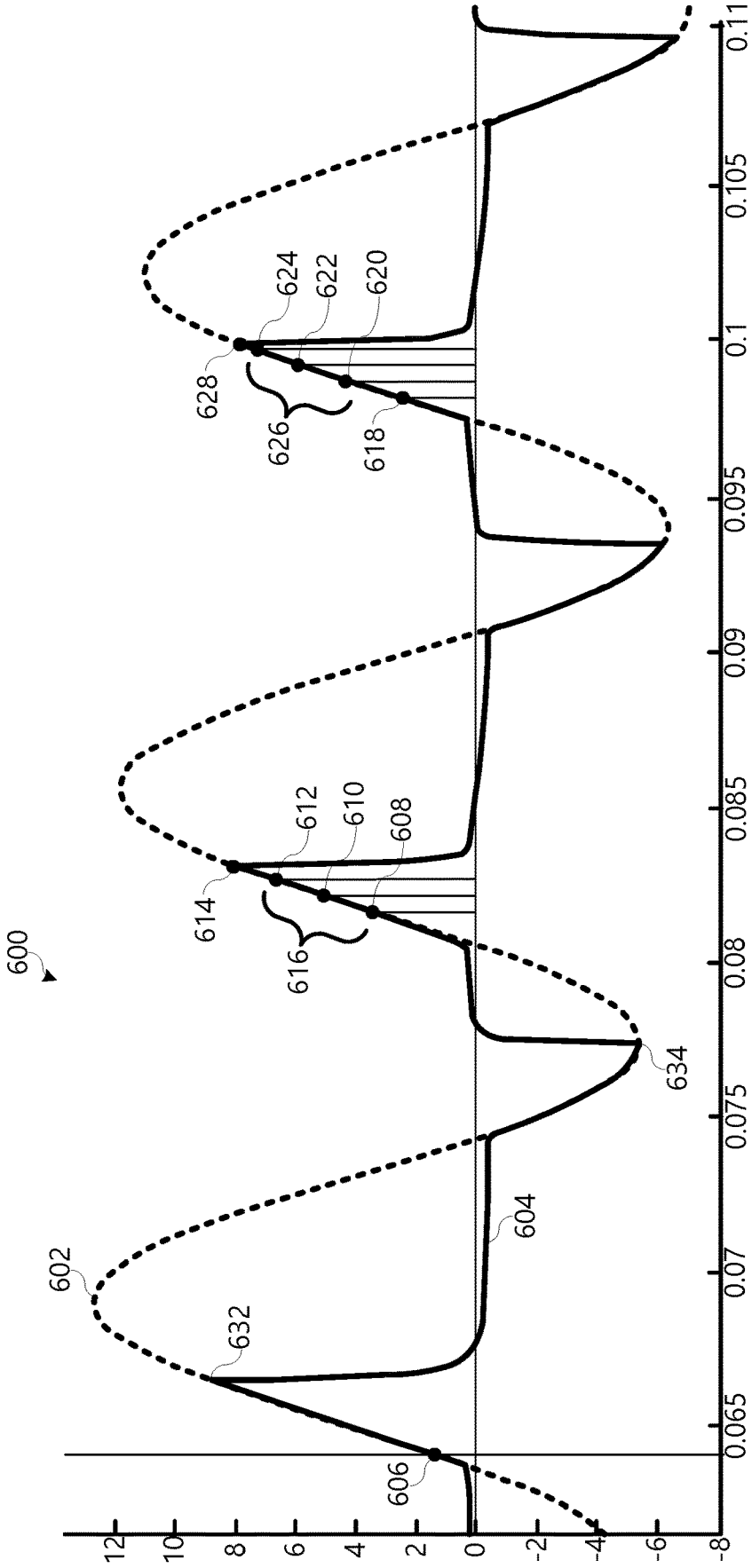
600
602
604
606
608
610
612
614
616
618
620
622
624
626
628
632
634
12
10
8
6
4
2
0
-2
-4
-6
-8
0.065
0.07
0.075
0.08
0.085
0.09
0.095
0.1
0.105
0.11

Figure 6

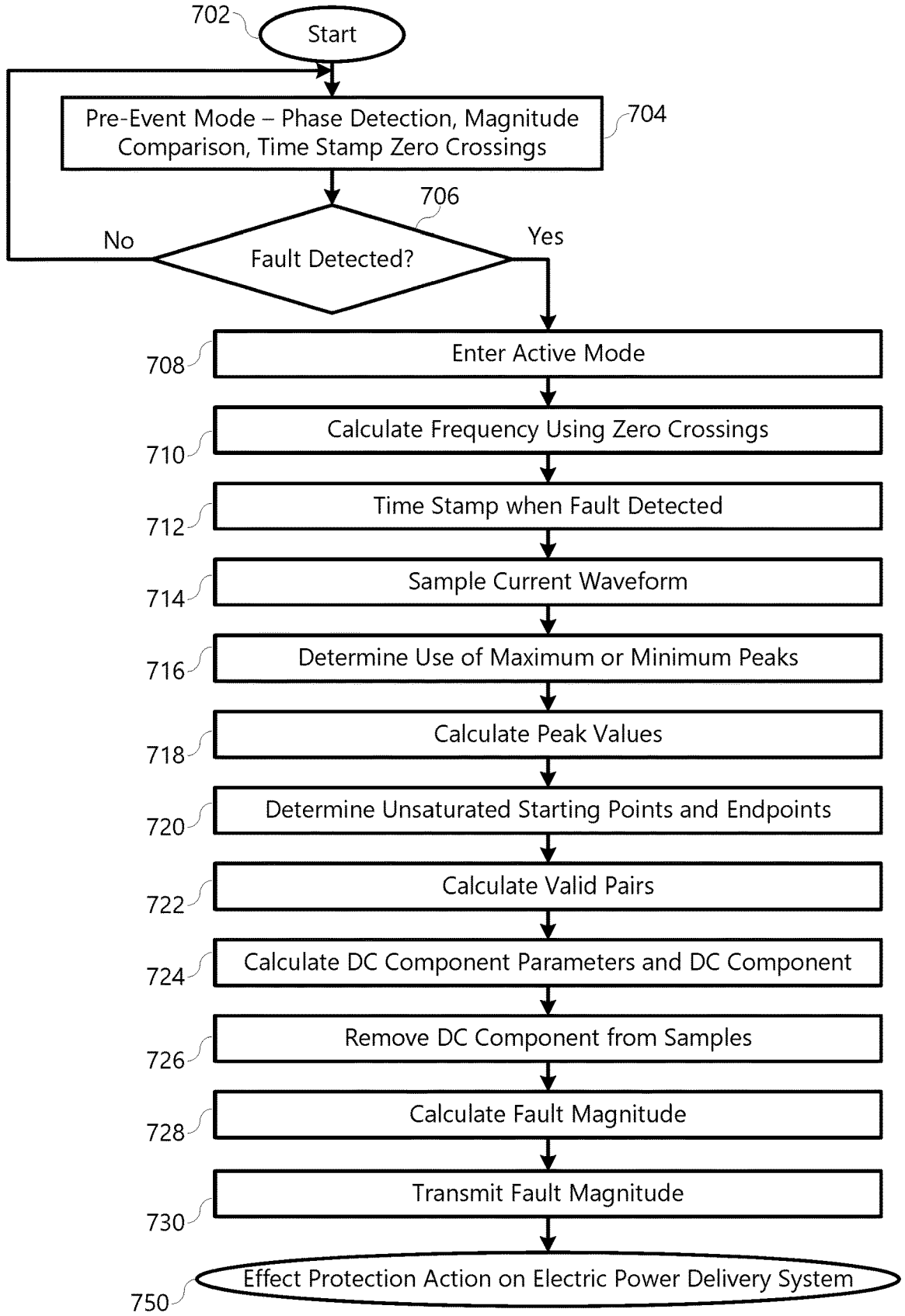
702
Start
Pre-Event Mode – Phase Detection, Magnitude Comparison, Time Stamp Zero Crossings
704
706
No
Fault Detected?
Yes
708
Enter Active Mode
710
Calculate Frequency Using Zero Crossings
712
Time Stamp when Fault Detected
714
Sample Current Waveform
716
Determine Use of Maximum or Minimum Peaks
718
Calculate Peak Values
720
Determine Unsaturated Starting Points and Endpoints
722
Calculate Valid Pairs
724
Calculate DC Component Parameters and DC Component
726
Remove DC Component from Samples
728
Calculate Fault Magnitude
730
Transmit Fault Magnitude
750
Effect Protection Action on Electric Power Delivery System

Figure 7

FAULT MAGNITUDE CALCULATION DURING CURRENT TRANSFORMER SATURATION

RELATED APPLICATION

none

TECHNICAL FIELD

This disclosure relates to calculating a magnitude of a fault on an electric power delivery system. More particularly, this disclosure relates to calculating the fault magnitude during current transformer saturation. This disclosure also relates to protecting an electric power delivery system using a calculated fault magnitude during current transformer saturation.

BRIEF DESCRIPTION OF THE DRAWINGS

Non-limiting and non-exhaustive embodiments of the disclosure are described, including various embodiments of the disclosure with reference to the figures, in which:

FIG. **1** illustrates a simplified one-line diagram of an electric power delivery system

FIGS. **2**A and **2**B illustrate secondary current signals from a current transformer (CT) during saturation.

FIG. **3** illustrates a simplified block diagram of a line-mounted sensor according to several embodiments herein.

FIG. **4** illustrates a simplified functional block diagram of an intelligent electronic device (IED) in accordance with several embodiments herein.

FIG. **5** illustrates current and data plots in accordance with several embodiments herein.

FIG. **6** illustrates a current signal from a saturated CT along with points useful for determining current measurements in accordance with several embodiments herein.

FIG. **7** illustrates a flow chart representing a method of protecting an electric power delivery system using fault magnitude values calculated by a line-mounted device under CT saturation.

DETAILED DESCRIPTION

Electric power delivery systems are used throughout the world to generate, transmit, and distribute electric power to loads for consumption. To monitor, protect, and automate the electric power delivery system and its equipment, intelligent electronic devices (IEDs) may be used to obtain and process information from the electric power delivery system, perform monitoring and protection functions, and effect control operations on the electric power delivery system equipment. Typically, IEDs are located at substations and near major equipment.

To improve the data gathering, monitoring, and protection of the electric power delivery system, line-mounted devices may be used to obtain electric power system measurements and provide measurements and information to IEDs and supervisory systems. Measurements and electric power delivery system information from line-mounted devices may be used by IEDs to improve monitoring and protection of the electric power delivery system. For example, a line-mounted device may obtain current measurements during a fault condition. The line-mounted device may detect the fault, and report the fault condition along with a fault magnitude to the IEDs or supervisory system. IEDs or the supervisory system may use fault magnitude to determine a more accurate fault

location. Indeed, an IED may provide a better estimation of the fault location using a fault magnitude from a line-mounted device nearer to the fault than a fault magnitude obtained from the location of the IED.

Accordingly, what is needed is a line-mounted device that provides an accurate fault magnitude calculation to an IED to improve the accuracy of the fault location calculation. Furthermore, what is needed is a line-mounted device that provides accurate fault magnitude calculation during current transformer (CT) saturation. Also, what is needed is a line-mounted device that provides accurate fault magnitude calculation while reducing power consumed by the line-mounted device.

Line-mounted devices may obtain electric power current measurements from the line using CTs. CTs used be line-mounted devices may be constrained by requirements related to size, power consumption, weight, and the like. Accordingly, CTs used by line-mounted devices may saturate when the current exceeds the nominal current for the portion of the electric power delivery system where the line-mounted device is applied or when current approaches a fault current magnitude.

Accordingly, what is needed is a method to determine a current signal using the output of a saturated CT. Electric power system monitoring and protection is improved by the calculation of current signals using the output of a saturated CT. Furthermore, the accuracy of a fault location is improved by using a fault magnitude from a line-mounted device even under saturated CT conditions.

The embodiments of the disclosure will be best understood by reference to the drawings, wherein like parts are designated by like numerals throughout. It will be readily understood that the components of the disclosed embodiments, as generally described and illustrated in the figures herein, could be arranged and designed in a wide variety of different configurations. Thus, the following detailed description of the embodiments of the systems and methods of the disclosure is not intended to limit the scope of the disclosure, as claimed, but is merely representative of possible embodiments of the disclosure. In addition, the steps of a method do not necessarily need to be executed in any specific order, or even sequentially, nor need the steps be executed only once, unless otherwise specified.

In some cases, well-known features, structures or operations are not shown or described in detail. Furthermore, the described features, structures, or operations may be combined in any suitable manner in one or more embodiments. It will also be readily understood that the components of the embodiments as generally described and illustrated in the figures herein could be arranged and designed in a wide variety of different configurations.

Several aspects of the embodiments described may be implemented as software modules or components. As used herein, a software module or component may include any type of computer instruction or computer executable code located within a memory device and/or transmitted as electronic signals over a system bus or wired or wireless network. A software module or component may, for instance, comprise one or more physical or logical blocks of computer instructions, which may be organized as a routine, program, object, component, data structure, etc., that performs one or more tasks or implements particular abstract data types.

In certain embodiments, a particular software module or component may comprise disparate instructions stored in different locations of a memory device, which together implement the described functionality of the module.

Indeed, a module or component may comprise a single instruction or many instructions, and may be distributed over several different code segments, among different programs, and across several memory devices. Some embodiments may be practiced in a distributed computing environment where tasks are performed by a remote processing device linked through a communications network. In a distributed computing environment, software modules or components may be located in local and/or remote memory storage devices. In addition, data being tied or rendered together in a database record may be resident in the same memory device, or across several memory devices, and may be linked together in fields of a record in a database across a network.

Embodiments may be provided as a computer program product including a non-transitory computer and/or machine-readable medium having stored thereon instructions that may be used to program a computer (or other electronic device) to perform processes described herein. For example, a non-transitory computer-readable medium may store instructions that, when executed by a processor of a computer system, cause the processor to perform certain methods disclosed herein. The non-transitory computer-readable medium may include, but is not limited to, hard drives, floppy diskettes, optical disks, CD-ROMs, DVD-ROMs, ROMs, RAMs, EPROMs, EEPROMs, magnetic or optical cards, solid-state memory devices, or other types of machine-readable media suitable for storing electronic and/or processor executable instructions.

FIG. **1** illustrates a simplified one-line diagram of an electric power delivery system **100**. Electric power may be generated by generation sites **130**, **132**, which supply electric power to a transmission bus **110** via transformers **112**, **114**. Electric power may be transmitted via transmission lines **120**, **122** to bus **142** at substation **170**. Transformers **116**, **118** may reduce voltage of the electric power from bus **142** to distribution bus **144**. Several feeders **180**, **182**, **184** may distribute electric power from distribution bus **144** to various loads.

Although not separately illustrated, various of the electric power delivery system equipment may be monitored or protected by various IEDs. For example, generators may be monitored and protected by generator IEDs. Transformers, buses, transmission lines, and the like may be monitored and protected by respective IEDs. Feeder **180** may be monitored and protected using IED **174**, which obtains electric power signals from feeder **180** using CTs, PTs, and the like; and may effect control of the electric power system by control of a circuit breaker. Similarly, feeder **182** may be monitored and protected using IED **176**, and feeder **184** may be monitored and protected using IED **178**.

To improve the monitoring and protection of feeders **180**, **182**, and **184**, line-mounted devices in the form of faulted circuit indicators (FCIs) **152**, **154**, **156**, **158**, **160**, and **162** may be used on feeders **180**, **182**, and **184**. FCIs may obtain electric power signals from feeders **180**, **182**, **184** using, for example, CTs. Upon obtaining electric power signals, FCIs may sample a secondary signal from CTs, determine a fault condition, determine a fault current magnitude, and transmit information such as current, fault current magnitude, and the like to IEDs **174**, **176**, and **178** according to the embodiments herein described.

As suggested above, line-mounted devices often include CTs that may saturate under current conditions that exceed the nominal current condition of the electric power delivery system or approaches fault current magnitude. FIG. **2**A illustrates a plot of a secondary current signal from a saturated CT of a line-mounted device during a **500**A primary fault condition. As can be seen, the CT saturates leading to a distorted current signal. Similarly, FIG. **2**B illustrates a plot of a secondary current signal from a saturated CT of a line-mounted device during a 25,000 A primary fault condition. The evidence of saturation of the CT is even more evident than the saturation illustrated in FIG. **2**A given the distortion present in the secondary signal. Clearly, the sinusoidal current waveform is not represented by the current secondary from the saturated CT.

FIG. **3** illustrates a simplified block diagram of a line-mounted device **372** obtaining current measurements from feeder **180**, and determine a fault current magnitude even under saturated CT conditions according to several embodiments herein. The line-mounted device **372** may refer to any of the line-mounted devices or FCIs **152**, **154**, **156**, **158**, **160**, or **162** discussed above. The line-mounted device **372** may include sensor circuitry **300** configured to obtain a current signal from the feeder **180**. The sensor circuitry **300** may include one or more CTs **302** operatively coupled to the feeder **180** such that current through the feeder **180** induces current through the CT **302** proportional to current through the feeder **180** under unsaturated conditions. The sensor circuitry **300** may further include threshold detection circuitry **308** and phase detection circuitry **310**. The threshold detection circuitry **308** may have a rectifier **304** that rectifies the current signals from the CT **302** and a comparator **306** electrically coupled to an output of the rectifier **304**. The comparator **306** may compare the rectified signal to a threshold to detect an occurrence of an event such as fault **368**. As suggested herein, the CT may provide an accurate secondary current signal during nominal conditions but a distorted secondary current signal during saturated conditions (such as, for example, during an overcurrent condition).

The line sensor **372** may include a controller **318**, such as a microcontroller, having one or more processor(s) **320**, memory **322** and/or nonvolatile storage **324**, one or more alarms **326**, communication circuitry **328**, input circuitry **330**, or any combination thereof. Each of the processor **320**, the memory **322**, the storage **324**, the alarms **326**, the communication circuitry **328**, and the input circuitry **330** may be communicatively coupled by one or more communication busses **332**. In the illustrated embodiment, the input circuitry **330** may receive the output from the comparator **306**. For example, the comparator **306** may output a digital signal to the input circuitry **330** based on the comparison between the threshold and the rectified signal to indicate the occurrence of the event **368**.

In the illustrated embodiment, the line sensor **372** includes one or more analog to digital (A/D) converters **336** that receive an analog signal from the current transformer **302** or another current transformer and convert the analog signal into a digital signal. The A/D converter **336** may multiplex, sample, and/or digitize the measured current and/or voltage signals to form corresponding digitized current and/or voltage signals. For example, the A/D converter **336** may monitor an analog signal indicative of the operating parameter on the feeder **180** and output a digital signal representing the operating parameter on the feeder **180**.

The processor **320** and/or other data processing circuitry may be operably coupled with the memory **322** and/or the nonvolatile storage **324** to perform various operations. Such programs or instructions executed by the processor **320** may be stored in any suitable article of manufacture that may include one or more tangible, computer-readable media at least collectively storing the instructions or routines, such as

the memory **322** and the nonvolatile storage **324**. The memory **322** and the nonvolatile storage **324** may include any suitable articles of manufacture for storing data and executable instructions, such as random-access memory, read-only memory, rewritable flash memory, hard drives, or any other suitable optical, magnetic, or solid-state storage medium, or a combination thereof.

In some embodiments, the processor **320**, the memory **322**, and/or the nonvolatile storage **324** may be implemented as hardware components, such as via discrete electrical components, via a field programmable gate array (FPGA), and/or via one or more application specific integrated circuits (ASICs). The processor **320** may be embodied as one or more general-purpose microprocessors, one or more special-purpose microprocessors, a general purpose integrated circuit, an ASIC, an FPGA, and/or other programmable logic devices.

The input circuitry **330**, such as the A/D converter **336**, may be operatively coupled to the processor **320** (e.g., via the communication bus **332** or another bus), through which digitized representations of current and/or voltage signals may be transmitted to the processor **320**. The processor **320** may analyze the event **368** based on the digitized representations of current using instructions stored in the memory **322**. The processor **320** may then provide a signal indicating the occurrence of the event **368**. In certain embodiments, the processor **320** may send a signal to the alarm **326** to indicate the event **368** occurrence. The alarm **326** may provide an audio alert, a visual alert (e.g., LEDs), or the like. The processor **320** may send a signal to the communication circuitry **328** to output a wireless signal to an electronic device to indicate that the event **368** has occurred or is ongoing. In some embodiments, the communication circuitry **328** may include a transceiver that receives and/or transmits data to enable the processor **320** to communicate with other electronic devices. For instance, the processor **320** may communicate, via a communication network with a central monitoring system **352**, such as a supervisory control and data acquisition (SCADA) system and/or a wide area control and situational awareness (WACSA) system. The central monitoring system **352** may provide protective operations for the power transmission and distribution system.

The processor **320** may communicate, via a communication network and/or via direct radio signals sent by the transceiver, with one or more intelligent electronic devices (IEDs) **354**. The IED **354** may be remote from the central monitoring system **352** and may communicate directly or over the communication network with the central monitoring system **352** and/or one or more other IEDs.

In certain embodiments, the line-mounted device **372** may communicate via radio signals with an intermediary device which transmits information to IEDs, SCADA, WACSA, or similar monitoring systems. An intermediate device may be in radio communication with several line-mounted devices, and transmit information therefrom to IEDs, SCADA, WACSA, or similar monitoring systems.

The line sensor **372** may include power harvesting circuitry **360** (e.g., current transformers coupled to the power line **358**, photovoltaic cells, etc.) and/or power storage circuitry **362** (e.g., battery cells, capacitors, supercapacitors, and the like) to store, for example, the harvested energy. Electric power for the energy harvesting circuitry **360** may be obtained using CT **302**. The power harvesting circuitry **360** and/or the power storage circuitry **362** may provide power to the line sensor **372** to enable the line sensor **372** to monitor the feeder **180** and provide an indication of the event **368**.

The line sensor **372** may be a wireless line sensor that is powered with the power harvesting circuitry **360** and/or the power storage circuitry **362**. The power harvesting circuitry **360** of wireless line sensors may be limited in which the line sensor **372** is powered via the current transformer **302** or another current transformer without being directly electrically coupled to the power grid. That is, alternating current on the feeder **180** may produce a magnetic field that magnetically induces alternating current in the current transformer **302** (e.g., through a core), harvested by the power harvesting circuitry **360**, to power each of the operations of line sensor **372** without additional sources of power other than the power harvesting circuitry **360** and/or the power storage circuitry **362** (e.g., without directly conducting electrical energy via a conductor directly electrically coupled to the power grid). In other embodiments, the power harvesting circuitry **360** may harvest power via photovoltaic cells. The power storage circuitry **362** may include one or more battery cells, capacitors, supercapacitors, or the like, to store energy from the power harvesting circuitry **360** to power the line sensor **372**. In some embodiments, the line sensor **372** may perform each of the operations described herein using power from the power harvesting circuitry **360** and/or power storage circuitry **362** without additional power sources.

Because power to perform operations may be limited on the line sensor **372** based on the power harvesting circuitry **360** and/or the power storage circuitry **362**, it may be desirable for the line sensor **372** to conserve power. Line sensors that continuously monitor samples (e.g., sampling 3, 4, 5, 10, 20, or more samples within a period) of the current during normal operation may utilize significant power. As described below, embodiments consistent with the present disclosure may improve line sensor technology by determining a fault and fault current magnitude of the event without continuously monitoring the current during normal operations (e.g., operations prior to or without an event). By determining a fault current magnitude of the event while limiting power consumption, additional functionality of the wireless line sensor technology may be enabled in which the line sensor **372** provides or stores an indication of the event.

The phase detection circuitry **310** may monitor a feature of the operating parameter, such as changes in the current or voltage. In the illustrated embodiment, the phase detection circuitry **310** may monitor a time at which a feature, such as a zero crossing of the current, a zero crossing of the voltage, a peak (e.g., maximum and/or minimum) of the current, or a peak (e.g., maximum and/or minimum) of the voltage, occurs.

The phase detection circuitry **310** may send an activation signal to activate (e.g., wake up) the controller **318** to enable the controller **318** to store a time stamp associated with each zero crossing. For example, the phase detection circuitry **310** may activate, via hardware interrupts, the controller **318** at each rising edge (e.g., from negative phase to positive phase) and/or falling edge (e.g., from positive phase to negative phase). Upon activation, the controller **318** may record a time stamp associated with the rising edge and/or falling edge and be deactivated until reactivated.

Prior to the event, the controller **318** may be in a sleep mode or in a low power mode, referred to herein as being in a pre-event mode, in which the controller **318** may not measure samples of the magnitude of the current on the feeder **180** to conserve power. That is, the controller **318** may be activated to record time stamps of the zero crossing

but may not sample the magnitude of the current or may otherwise be inactive in the pre-event mode. For instance, by being activated to record the time stamps of zero crossings (e.g., awake 60 times per second for a 60 hz signal). For example, the controller **318** may begin in an inactive state. Upon occurrence of a zero crossing, the phase detection circuitry **310** may send the activation signal to the controller **318** to activate the controller **320**. The processor **320** may record a time stamp of the zero crossing based upon the activation signal and return to being inactive. The controller **318** may repeat this process while operating in the pre-event mode to conserve power by the controller **318** being inactive other than during the zero crossings.

The controller **318** may receive an event signal from the threshold detection circuitry **308** indicating the occurrence of the event **368** due to current exceeding a threshold. The controller **318** may activate upon receiving the event signal and operate in an event mode in which the controller **318** is active, awake, on, or in a high power mode that utilizes more power than the low power mode (e.g., due to being active for longer periods than when active in the pre-event mode) prior to the event. The controller **318** may then measure samples of the current of the feeder **180**. In some embodiments, the controller **318** may measure repeated samples (e.g., 8, 16, 32, or more samples), in the event mode, during or following the event **368** to analyze the event **368**. That is, the controller **318** may not take any samples of current magnitude prior to the event **368** but may be active to record zero crossings and, upon receipt of the event signal, transition to the event mode and take repeated samples. In other embodiments, the controller **318** may take fewer samples prior to the occurrence of the event **368** than during the occurrence of the event **368**. Further, the processor **320** may determine the times at which the zero crossings occurred from the activations by the phase detection circuitry **310** and store the times in the memory **322** and/or nonvolatile storage **324**. Based on the zero crossings prior to the event **368** and the repeated samples during or following the event **368**, the processor **320** may determine a fault current magnitude of the event **368** even without samples obtained prior to the event, and even under saturated CT conditions.

FIG. **4** illustrates a simplified block diagram of an IED **400** for monitoring or protecting at least a portion of the electric power delivery system. Any of IEDs **174**, **176**, **178** of FIG. **1** may be configured similarly to IED **400**. As has been suggested above, IED **400** may be configured to obtain electric power system signals from equipment of the electric power delivery system.

IED **400** includes a communications interface **416** configured to communicate with devices (such as line-mounted devices or intermediary devices) and/or IEDs. In certain embodiments, the communications interface **416** may facilitate direct communication with devices and other IEDs or communicate with systems over a communications network. According to various embodiments, the communications interface **416** may be configured to communicate via radio communications, and include an antenna for radio communications. IED **400** may further include a time input **412**, which may be used to receive a time signal (e.g., a common time reference) allowing IED **400** to apply a time-stamp to the acquired samples. In certain embodiments, a common time reference may be received via communications interface **416**, and accordingly, a separate time input may not be required for time-stamping and/or synchronization operations. One such embodiment may employ the IEEE 1588 protocol.

A monitored equipment interface **408** may be configured to receive status information from, and issue control instructions to, a piece of monitored equipment (such as a circuit breaker, conductor, transformer, or the like). In various embodiments, IED **400** may be configured to effect a control or protection operation on an electric power delivery system using the monitored equipment interface **408**. Upon detection of an event, the IED **400** may be configured to issue a signal to the monitored equipment to perform a function via the monitored equipment interface **408**. For example, upon detection of a fault within a zone of protection of the IED **400**, the IED may signal a circuit breaker to open to remove electric power from a portion of the electric power delivery system.

Processor **424** may be configured to process communications received via communications interface **416**, time input **412**, and/or monitored equipment interface **408**. Processor **424** may operate using any number of processing rates and architectures. Processor **424** may be configured to perform various algorithms and calculations described herein. Processor **424** may be embodied as a general purpose integrated circuit, an application specific integrated circuit, a field-programmable gate array, and/or any other suitable programmable logic device.

In certain embodiments, IED **400** may include a sensor component **410**. In the illustrated embodiment, sensor component **410** is configured to gather data directly from conventional electric power system equipment such as a conductor (not shown) using conventional PTs and/or CTs. The sensor component **410** may use, for example, transformers **402** and **414** and A/D converters **418** that may sample and/or digitize filtered waveforms to form corresponding digitized current and voltage signals provided to data bus **422**. Current (I) and voltage (V) inputs may be secondary inputs from conventional instrument transformers such as, CTs and VTs. A/D converters **418** may include a single A/D converter or separate A/D converters for each incoming signal. A current signal may include separate current signals from each phase of a three-phase electric power system. A/D converters **418** may be connected to processor **424** by way of data bus **422**, through which digitized representations of current and voltage signals may be transmitted to processor **424**. In various embodiments, the digitized current and voltage signals may be used to calculate time-domain quantities for the detection and the location of a fault on an electric power system as described herein.

A computer-readable storage medium **426** may be the repository of a database **428** containing electric power line properties for each transmission line and/or each section of each transmission line, such as impedances, resistances, propagation times, reactances, lengths, and/or the like. Another computer-readable storage medium **430** may be the repository of various software modules configured to perform any of the methods described herein. A data bus **442** may link monitored equipment interface **408**, time input **412**, communications interface **416**, and computer-readable storage mediums **426** and **430** to processor **424**.

Computer-readable storage mediums **426** and **430** may be separate mediums, or may be the same medium (i.e. the same disk, the same non-volatile memory device, or the like). Further, the database **428** may be stored in a computer-readable storage medium that is not part of the IED **400**, but that is accessible to IED **400** using, for example, communications interface **416**.

Communications module **432** may be configured to allow IED **400** to communicate with any of a variety of external devices via communications interface **416**. Communications

module **432** may be configured for communication using a variety of data communication protocols (e.g., UDP over Ethernet, IEC 61850, etc.).

Data acquisition module **440** may collect data samples such as the current and voltage quantities and the incremental quantities. The data samples may be associated with a timestamp and made available for retrieval and/or transmission to a remote IED via communications interface **416**. Data acquisition module **440** may operate in conjunction with fault detector module **434**. Data acquisition module **440** may control recording of data used by the fault detector module **434**. According to one embodiment, data acquisition module **440** may selectively store and retrieve data and may make the data available for further processing. Such processing may include processing by fault detector module **434**, which may be configured to determine the occurrence of a fault with an electric power distribution system.

A protective action module **452** may be configured to implement a protective action based on the declaration of a fault by the fault detector module **434**. In various embodiments, a protective action may include tripping a breaker, selectively isolating a portion of the electric power system, etc. In various embodiments, the protective action module **452** may coordinate protective actions with other devices in communication with IED **400**.

As is illustrated and described, line-mounted devices may be installed in a somewhat distributed manner on conductors in an electric power delivery system. The line-mounted devices may monitor current on the conductor, determine current levels, determine fault conditions, and communicate such information back to an IED or supervisory system either directly or indirectly through intermediary devices, communication networks, and the like. Furthermore, line-mounted devices may be configured to operate using electric power harvested from the conductor, onboard power sources, or the like. To conserve electric power for operation, the line-mounted device may be configured to reduce the amount of electric power used by its various components. To that end, the line-mounted device may be configured to operate with the processor in a low-power mode unless certain conditions are detected. As illustrated in FIG. **3**, the line-mounted device may use sensor circuitry to determine phase, compare current magnitude to a threshold, filter the current signal, and the like. The processor **320** may be activated to record time stamps of zero crossings determined by the phase detection circuitry **310**. The processor **320** may be activated upon determination of a fault condition by the comparator **306**, at which time the processor may be active to record sampled current signals, determine fault conditions, determine a direction to the fault, determine a fault magnitude, effect communication, and the like. Otherwise, the processor **320** may remain in low-power or pre-event mode without continuously sampling the current signal.

FIG. **5** illustrates plots of signals during different time periods and stages of a line-mounted device. The set of graphs in are meant to be illustrative of concepts consistent with embodiments of the disclosure, and while the graphs are depicted visually, the line sensor **372** may process data from the sensor circuitry **300** and/or the phase detection circuitry **310** without generating the visual depiction of the graphs.

A first graph **586** shows current measurements obtained at the current sensor circuitry **300** representative of current through the power line **180** with respect to time. A second graph **588** illustrates the rectified current obtained at the comparator **306** to detect the occurrence of the event **368**. A third graph **500** shows a signal analyzed via the phase detection circuitry **310** used to activate the controller **318** to obtain the time stamps of the zero crossings. A fourth graph **501** shows an activation signal sent from the phase detection circuitry **310** to the controller **318** to record the time stamps of the zero crossings. The phase detection circuitry **310** may detect the times at which the phase alternates directions at time stamps t_0, t_1, t_2, and t_3. Each of the time stamps t_0, t_1, t_2, and t_3 may be stored in memory **322** and/or the nonvolatile storage **324** the controller **318**. In an embodiment, the phase detection circuitry **310** may send the activation signal to activate the controller **318** at each rising edge at time t_1 and t_3. In another embodiment, the phase detection circuitry **310** may send the activation signal to activate the controller **318** at each falling edge at time t_0 and t_2.

In the illustrated embodiment, upon detecting that the current exceeds the threshold, the line-mounted device may detect an overcurrent fault, and determine the fault magnitude for transmission to an IED or supervisory system such that additional aspects of the fault may be determined. As described above, the CT may become saturated, such that the fault magnitude cannot be measured directly using the secondary signals therefrom. To determine the fault magnitude even during CT saturation, the line-mounted device may: 1) time stamp zero crossing of the pre-event current and determine the power system period and frequency; 2) when the current magnitude exceeds a predetermined threshold, time stamp the instant that the threshold is crossed, and start sampling the current; 3) calculate the first maximum peak and minimum peak of the sampled waveform; 4) find the maximum or minimum peaks (depending on step 3) and find the unsaturated region of samples depending on the maximum or minimum peaks; 5) determine data pairs of samples within the unsaturated regions in consecutive cycles; 6) determine direct current (DC) component parameters; 7) remove DC components from the samples; and 8) determine the fault magnitude with the DC components removed.

The processor **320** may retrieve the time stamps t_1 and t_3 of rising zero crossings of the pre-event current **512** from the memory **322** and/or the non-volatile storage **324**. The processor **320** may determine a period (or frequency) **520** and **522** of the pre-event current **512** based on the time stamps t_1 and t_3 the rising edge zero crossings **506**, and **510**. In an embodiment, the processor **320** may utilize a moving average filter to determine the period **520** and **522**. For example, a low pass filter (which may be implemented in the processor **320**, or may be implemented in hardware in, for example, the input circuitry **330**) having a moving average of time between each of the rising zero crossings may be implemented according to Equation 1:

$$T_{average}[n] = \frac{1}{4}(t_s[n] - t_s[n-4]) \qquad \text{Eq. 1}$$

$$f = \frac{1}{T_{average}[n]}$$

where

t_s represents the time stamps of the rising edge zero crossings of the nth sample. Note that while rising edge zero crossings are used as an example, falling edge or a combination of both may be used.

At time t_f, the sensor circuitry **300** may detect an occurrence of the event **368** by determining that measured current has exceeded a current threshold (I_{TH}). Upon determining

that the measured current exceeds I_{TH}, the sensor circuitry **300** may send the event signal to the controller **318** to activate the controller **318** to operate in the event mode from operating in the pre-event mode. The processor **320** may begin repeatedly sampling the fault current for one or more cycles (e.g., 2.5 cycles, 3 cycles, 5 cycles, 6 cycles, 10 cycles, etc.). The processor **320** may obtain the first sample at time t_{fs} according to Equation 2:

$$t_{fs} = t_s[n] + m_{min} * \frac{T_{average}[n]}{N} \quad \text{Eq. 2}$$

where

$t_s[n]$ is the last time stamp of the zero crossing of current prior to the event;

N is the total number of samples per cycle;

$T_{average}[n]$ is derived from equation (1); and,

m_{min} is the smallest integer number in which $t_f < t_{fs}$ where t_f refers to the time at which the current threshold is exceeded.

The sampling frequency (f_{samp}) selected may depend on the period to obtain a given number of samples per cycle.

TABLE 1

Example sampling frequencies (f_{samp}).

Frequency range (Hz)		Period range (ms)		Sampling frequency for 8 samples per cycle (kHz)	Sampling frequency for 16 samples per cycle (kHz)	Sampling frequency for 32 samples per cycle (kHz)
64.75	65.25	15.44	15.33	0.522	1.044	2.088
64.25	64.75	15.56	15.44	0.518	1.036	2.072
63.75	64.25	15.69	15.56	0.514	1.028	2.056
63.25	63.75	15.81	15.69	0.51	1.02	2.04
62.75	63.25	15.94	15.81	0.506	1.012	2.024
62.25	62.75	16.06	15.94	0.502	1.004	2.008
61.75	62.25	16.19	16.06	0.498	0.996	1.992
61.25	61.75	16.33	16.19	0.494	0.988	1.976
60.75	61.25	16.46	16.33	0.49	0.98	1.96
60.25	60.75	16.60	16.46	0.486	0.972	1.944
59.75	60.25	16.74	16.60	0.482	0.964	1.928
59.25	59.75	16.88	16.74	0.478	0.956	1.912
58.75	59.25	17.02	16.88	0.474	0.948	1.896
58.25	58.75	17.17	17.02	0.47	0.94	1.88
57.75	58.25	17.32	17.17	0.466	0.932	1.864
57.25	57.75	17.47	17.32	0.462	0.924	1.848
56.75	57.25	17.62	17.47	0.458	0.916	1.832
56.25	56.75	17.78	17.62	0.454	0.908	1.816
55.75	56.25	17.94	17.78	0.45	0.9	1.8
55.25	55.75	18.10	17.94	0.446	0.892	1.784
54.75	55.25	18.26	18.10	0.442	0.884	1.768

For example, a sampling frequency for a system frequency between 59.75 Hz and 60.25 Hz (i.e., a period of approximately 16.60 ms to 16.74 ms) with 8 samples per cycle may have a sampling frequency of approximately 0.482 kHz. While the table provides example sampling frequencies, these are simply meant to be illustrative and any suitable sampling frequency may be used.

The sequence of sampled values at the chosen frequency {Sm} may refer to:

$$s_m = s\left(t_{fs} + m\frac{T_{average}[n]}{N}\right) \quad \text{Eq. 3}$$

where m is the integer sample (e.g., m=0, 1, 2, . . .).

With the sequence of sampled values, the processor may calculate the first maximum peak and minimum peak values of the sampled waveform. FIG. **6** illustrates a current waveform **600** captured by a line-mounted device with a CT that has been saturated by an overcurrent condition. As can be seen, a secondary current without a saturated CT would appear as trace **602**. However, due to the CT saturation, the measured secondary current is represented by trace **604**. At point **606** an overcurrent condition is detected, the processor enters active mode, and sampling begins. Maximum peak **632** is determined, as is minimum peak **634**. The line-mounted device will use samples from either the maximum peaks or minimum peaks depending on the magnitudes thereof. If the first maximum peak has a magnitude greater than that of the first minimum peak, then samples of the maximum peaks will be used. If the first minimum peak has a magnitude greater than that of the first maximum peak, then minimum peaks will be used. In the illustrated embodiment, the first maximum peak has a magnitude greater than the magnitude of the first minimum peak, so the line-mounted device will use samples of the maximum peaks.

The line mounted device may then find the maximum peak values for at least two of the maximum peaks. As illustrated, peaks **614** and **628** are determined as the first two maximum peaks. In the illustrated example, the first illustrated peak **632** may be ignored because the sampling thereof did not start until the current exceeded the threshold at **606**. However, various embodiments may include such a first observed peak. The peak samples may be denoted as S_{m1} (**614**), S_{m2} (**628**), S_{m3}, S_{m4}, S_{m5}, and so forth.

From the peak values, the samples closest to, for example, 90% of the peak value are found, and referred to herein as unsaturated endpoints. The unsaturated endpoints may be denoted as n_{me1} (**612**), n_{me2} (**624**), n_{me3}, n_{me4}, n_{me5}, and so forth. From the peak values, the samples closest to, for example, 50% of the peak value are found, and referred to herein as unsaturated starting points. The unsaturated starting points may be denoted as n_{ms1} (**608**), n_{ms2} (**620**), n_{ms3}, n_{ms4}, n_{ms5}, and so forth. The unsaturated starting points and unsaturated endpoints are used to determine the unsaturated regions of the CT. As illustrated the unsaturated region of the first peak includes the region **616** from unsaturated starting point **608** to unsaturated endpoint **612**; and the unsaturated region of the second peak includes the region **626** from unsaturated starting point **620** to unsaturated endpoint **624**.

It should be understood that the unsaturated region may be determined using different starting points and endpoints. In one embodiment, the unsaturated endpoints are determined as the sample closest to 95% of the peak value. In another embodiment, the unsaturated starting points are determined as the sample closest to 40% of the peak value. Indeed, different combinations of the starting point and endpoint values may be used. For example, an embodiment may use the sample closet to 40% of the peak value for the starting point and the sample closest to 90% of the peak value for the endpoint. Furthermore, different starting point and endpoint values may be used for different peaks of the waveform. For example, in one embodiment, the unsaturated region of the first peak may be determined with a starting point as the sample closest to 50% of the first peak value and an endpoint as the sample closest to 90% of the first peak value; where the unsaturated zone of the second peak may be determined with a starting point as the sample closest to 40% of the second peak value and an endpoint as the sample closest to 95% of the second peak value.

With the unsaturated regions determined, valid data pairs may be selected. A valid data pair is a pair of data points in consecutive cycles, separated by the number of samples per cycle (N) that are each within the respective unsaturated region. That is, a valid pair meets the following criteria: 1) separated by N samples; and 2) each sample in the pair is within its unsaturated region. In the illustrated example, one pair includes points **612** and **622** because the two points are separated by N samples, and each is within its unsaturated region (**616**, **626**). Another pair includes points **610** and **620**, as these are separated by N samples, and each are within its unsaturated region (**616**, **626**). However, pair **608** and **618** are not a valid par because, although they are separated by N samples, point **618** is not within its unsaturated region, **626**, so the pair is not valid. Accordingly, in the example illustrated in FIG. **6**, two pairs are found.

According to several embodiments herein, at least two pairs in consecutive cycles are needed to determine the fault magnitude. As the pairs can come from any consecutive cycles, if the first two cycles do not yield at least two pairs, data samples from additional consecutive cycles may be used. For example, samples from the second and third cycle may be examined to determine if at least two valid pairs are found. Similar determinations may be made for subsequent cycles if needed. It should be noted that by increasing the number of samples per cycle (N), more pairs will be available in each unsaturated region. This will increase the likelihood that at least two valid pairs will be found. For purposes of examples herein, the first set of at least two valid pairs is denoted as N_{pairs}. Furthermore, if additional pairs are needed to provide sufficient valid pairs, additional sample points may be calculated by interpolating between recorded sample points in the unsaturated regions.

With at least two valid pairs determined, the pairs of samples may be used to calculate DC components of the saturated signal and to calculate the fault magnitude. This calculation may depend on the number of valid pairs found. If the number of valid pairs is 2 ($|N_{pairs}|=2$), then Equations 3 and 4 may be used to determine M_1 and M_2:

$$M_1 = \begin{bmatrix} 1 & 1 \\ 1 & 2 \end{bmatrix} \quad \text{Eq. 4}$$

$$M_2 = \begin{bmatrix} \cos(2\pi fT) & \sin(2\pi fT) \\ \cos(2*2\pi fT) & \sin(2*2\pi fT) \end{bmatrix} \quad \text{Eq. 5}$$

where:

$$T = \frac{1}{Nf_{sample}}$$

is the sampling interval;

M_1 is a DC component parameter matrix; and,

M_2 is a fault current magnitude matrix.

For the case with two valid pairs, the two data points may be denoted as $N_{pairs}=\{n_1, n_2\}$. The DC component parameters may be calculated using Equations 6-8:

$$S[n] = s[n] - s[n+N] \text{ if maximum peaks are used} \quad \text{Eq. 6A}$$

$$S[n] = s[n+N] - s[n] \text{ if minimum peaks are used} \quad \text{Eq. 6B}$$

-continued

$$S_{M1} = \begin{bmatrix} \mathrm{Ln}(S[n_1]) \\ \mathrm{Ln}(S[n_2]) \end{bmatrix} \quad \text{Eq. 7}$$

$$D_c = \begin{bmatrix} D_{c1} \\ D_{c2} \end{bmatrix} = (M_1^T M_1)^{-1} M_1^T S_{M1} \quad \text{Eq. 8}$$

The DC fault current component can then be calculated using Equation 9:

$$S_{Dc}[n] = \lambda e^{n\alpha} \quad \text{Eq. 9}$$

where:

$\alpha = D_{C2}$;

$$\lambda = \frac{e^{D}C1}{1 - e^{N\alpha}}$$

if maximum peaks are used; and,

$$\lambda = \frac{e^{D}C1}{e^{N\alpha} - 1}$$

if minimum peaks are used.

However, if the number of valid pairs is 3 ($|N_{pairs}|=3$), then Equations 10 and 11 may be used to determine M_1 and M_2:

$$M_1 = \begin{bmatrix} 1 & 1 \\ 1 & 2 \\ 1 & 3 \end{bmatrix} \quad \text{Eq. 10}$$

$$M_2 = \begin{bmatrix} \cos(2\pi fT) & \sin(2\pi fT) \\ \cos(2*2\pi fT) & \sin(2*2\pi fT) \\ \cos(3*2\pi fT) & \sin(3*2\pi fT) \end{bmatrix} \quad \text{Eq. 11}$$

Following the same pattern as in the case of two valid pairs, the three data points may be denoted as $N_{pairs}=\{n_1, n_2, n_3\}$. The DC component parameters may be calculated using Equation 8, and the DC fault current component may be calculated using Equation 9, with S_{M1} may be calculated using Equation 12:

$$S_{M1} = \begin{bmatrix} \mathrm{Ln}(S[n_1]) \\ \mathrm{Ln}(S[n_2]) \\ \mathrm{Ln}(S[n_3]) \end{bmatrix} \quad \text{Eq. 12}$$

Furthermore, if the number of valid pairs is 4 ($|N_{pairs}|=4$), then Equations 13 and 14 may be used to determine M_1 and M_2:

$$M_1 = \begin{bmatrix} 1 & 1 \\ 1 & 2 \\ 1 & 3 \\ 1 & 4 \end{bmatrix} \quad \text{Eq. 13}$$

-continued

$$M_2 = \begin{bmatrix} \cos(2\pi fT) & \sin(2\pi fT) \\ \cos(2*2\pi fT) & \sin(2*2\pi fT) \\ \cos(3*2\pi fT) & \sin(3*2\pi fT) \\ \cos(4*2\pi fT) & \sin(4*2\pi fT) \end{bmatrix} \quad \text{Eq. 14}$$

Following the same pattern as in the case of two valid pairs, the four data points may be denoted as $N_{pairs}=\{n_1, n_2, n_3, n_4\}$. The DC component parameters may be calculated using Equation 8, and the DC fault current component may be calculated using Equation 9, with S_{M1} may be calculated using Equation 15:

$$S_{M1} = \begin{bmatrix} \mathrm{Ln}(S[n_1]) \\ \mathrm{Ln}(S[n_2]) \\ \mathrm{Ln}(S[n_3]) \\ \mathrm{Ln}(S[n_4]) \end{bmatrix} \quad \text{Eq. 15}$$

It should be noted that more valid data pairs may be used, where the DC component parameters and DC fault current components may be calculated following the same pattern as has been described above.

With the DC fault current component, the DC component may be removed from the original samples to obtain a sinusoidal part of the original sampled secondary current signal using Equation 16:

$$s_{Ac}[n]=s[n]-s_{Dc}[n] \quad \text{Eq. 16}$$

where $S_{AC}[n]$ represents the original samples with the DC component removed.

Upon obtaining samples with the DC component removed, the fault current magnitude may be calculated. In one embodiment, the sinusoidal waveform (A_C) may be calculated in Equations 17 and 18, using the fault current magnitude matrix M_2 from the above Equations 5, 11, and 14, depending on the number of valid pairs:

$$S_{M2} = \begin{bmatrix} S_{Ac}[n_1] \\ S_{Ac}[n_2] \end{bmatrix} \quad \text{Eq. 17}$$

$$A_c = \begin{bmatrix} A_{c1} \\ A_{c2} \end{bmatrix} = (M_2^T M_2)^{-1} M_2^T S_{M2} \quad \text{Eq. 18}$$

The fault magnitude I_{Fault} in Root-Means Squared (RMS) may be calculated using Equation 19:

$$I_{Fault} = \frac{\sqrt{A_{c1}^2 + A_{c2}^2}}{\sqrt{2}} \quad \text{Eq. 19}$$

Accordingly, a fault magnitude may be calculated for a current signal even when the CT obtaining the current signal is saturated, and does not deliver a secondary signal representative of the entire waveform of the primary current signal. Furthermore, a fault magnitude may be calculated for a current signal even when samples for pre-fault current are not available. In either case, the embodiments herein improve the operation of a line-mounted sensor by calculating a fault current magnitude even when the CT is saturated, and even when pre-fault samples are not available.

As has been suggested above, the line-mounted sensor may have a limited power supply, especially during a fault condition. For example, the line-mounted device may be powered by harvesting electric power from the electric power delivery system. The line-mounted sensor may store the electric power in temporary storage such as, for example, a supercapacitor, rechargeable battery, or the like. Furthermore, the line-mounted sensor may include a processor or memory of limited capacity. In either case, the line-mounted sensor may benefit from reducing computation complexity.

As the fault current magnitude matrix M_2 depends on system frequency f, and a fixed sampling rate N, (Equations 5, 11, 14), the line-mounted sensor may be configured with pre-populated or fixed fault current magnitude matrices M_2 at different frequencies that are expected. The pre-populated matrices may be predetermined for a particular nominal frequency (e.g. 60 Hz or 50 Hz), and frequencies in the range of the particular nominal frequency. For example, a line-mounted device configured to monitor an electric power delivery system with a nominal frequency of 60 Hz may be configured with pre-populated matrices of: 1) 60 Hz for measured frequencies from 59.75 Hz-60.25 Hz; 2) 60.5 Hz for measured frequencies from 60.25 Hz-60.75 Hz; 3) 59.50 Hz for measured frequencies from 59.25 Hz-59.75 Hz; and so forth. Accordingly, if the measured frequency at the time of the fault is 60.3 Hz, and four valid pairs are found, the line-mounted device would use the pre-populated matrix for 60.5 Hz with four pairs (Equation 14).

It should be noted that the ranges and numbers of pre-populated matrices may be different than described in the above embodiment. Furthermore, if the measured frequency falls outside of the ranges of the pre-populated matrices, the line-mounted device may use the Equations as described herein to calculate the matrices instead of using the pre-populated matrices.

Because the use of pre-populated matrices will result in some loss of accuracy of the fault magnitude, the line-mounted device may include correction factors for the difference between the measured frequency and the frequency of the selected pre-populated matrix. The correction factor may be applied to either the pre-populated matrix or the calculations resulting therefrom such as, for example, the fault magnitude.

As has been described above, the number of valid pairs needed to calculate the fault magnitude as at least two. To increase accuracy of the calculated fault magnitude, the line-mounted device may be configured to calculate the fault magnitude using valid pairs from different consecutive peaks according to the embodiments described herein, and then calculating an estimated fault magnitude using the calculated fault magnitudes. For example, the estimated fault magnitude may be an average of the calculated fault magnitudes. In another example, the estimated fault magnitude may be a weighted average of the calculated fault magnitudes. In one particular example, more weight may be given to fault magnitudes calculated from valid pairs from earlier peak pairs than the weights given to fault magnitudes calculated from valid pairs from later peak pairs. Alternatively, in certain embodiments, more weight may be given to fault magnitudes calculated from valid pairs from later peak pairs than weights given to fault magnitudes calculated from valid pairs from earlier peak pairs. In another particular example, more weight may be given to fault magnitudes calculated using more valid pairs than to fault magnitudes calculated from fewer valid pairs.

As generally described above, a fault current magnitude is determined during CT saturation by: sampling the current

waveform once an overcurrent threshold is crossed; determining an unsaturated region; determining a DC component; removing the DC component; and, calculating a fault current magnitude with the DC component removed. The DC component is calculated and removed according to several embodiments as described above using Equations 4-16 above. It should be noted that the above embodiments do not disclose the exclusive methods of calculating and removing a DC component from a signal from a saturated CT. In various embodiments, the DC component may be a constant rather than a decaying signal, and its absolute magnitude may be greater than zero. In such an instance, the DC component may be calculated and then be removed using Equation 16. In such an embodiment, the method may first determine whether the DC component is a constant with an absolute magnitude greater than zero. If both conditions are met, then the embodiment may proceed with using the DC component instead of using Equations 4-15. Otherwise, the embodiment may continue as described above to calculate the DC component described in Equations 4-15.

FIG. **7** illustrates a flow chart of a method for improving the functioning of a line-mounted device by calculating fault magnitude even when the CT is saturated. The method starts **702** in pre-event or low-power mode, during which the line-mounted device performs phase detection, compares a magnitude against a threshold, and time-stamps zero crossings **704**. The comparison of the current magnitude against the threshold may be used to determine if a fault has occurred and resulted in an overcurrent condition on the electric power delivery system. If a fault is not detected **706** (the current magnitude does not exceed the predetermined threshold), then the method continues in pre-event mode **704**.

If, however, a fault is detected (the current magnitude does exceed the predetermined threshold) **706**, then the method continues to cause the line-mounted device to enter active mode **708**. In active mode, the line-mounted device calculates frequency using zero crossings obtained during the pre-event mode **710**. The line-mounted device also applies a time stamp to the current magnitude when the fault is detected **712**. The line-mounted device also samples the current waveform **714** provided by the CT. It should be noted that steps **708**, **710**, **712**, and **714** may all be initiated upon detection of the fault **706** (upon the current magnitude exceeding the predetermined threshold). Although not separately illustrated, in various embodiments, power system frequency may be calculated during pre-event mode.

With the calculated frequency and the sampled current waveform, the line-mounted device may determine use of maximum or minimum peaks **716**. This determination may be made by calculating the values of the first maximum and first minimum peak. If the first maximum peak has a larger magnitude than the first minimum peak, then the maximum peaks are used; whereas if the first minimum peak has a larger magnitude than the first maximum peak, then the minimum peaks are used.

The peak values of the maximum or minimum peaks (depending on step **716**) are then calculated **718**. Starting points and endpoints for unsaturated regions are determined **720**. In some embodiments as described above, the samples with values closest to 90% of the peak value and 50% of the peak value may be used as starting points and endpoints of unsaturated regions for each peak. As described above, the starting points and endpoints may be different than the 90% and 50% of the above embodiments.

With the unsaturated regions determined, the line-mounted device may calculate valid pairs **722** as described above. The valid pairs may be used to calculate DC component parameters and DC components **724**. With the DC component parameters and DC components, the line-mounted device may remove DC components from the samples **726**. With the DC component removed, the line-mounted device may calculate the fault magnitude **728** as described herein, and transmit the fault magnitude **730** to an IED or supervisory system. The IED or supervisory system may then effect a control or monitoring operation on the electric power delivery system using the calculated and received fault magnitude from the line-powered device **750**.

Accordingly, presented herein is an improvement to the functioning of a line-mounted device in that the line-mounted device is capable of determining a fault magnitude even under CT saturation; and even when pre-fault samples are not available. Furthermore, presented herein is an improvement to the functioning of an electric power delivery system due to the improvement in fault magnitude calculation being used by the IED or supervisory system from the line-mounted device for protection and monitoring functions.

It should be noted that although the line-mounted devices described herein may be illustrated as applied to a distribution portion of an electric power delivery system, the line-mounted devices may be applied to any portion of an electric power delivery system including transmission, distribution, generation, and consumption; as well as at different voltage and current levels. Furthermore, the line-mounted devices herein may be applied to overhead portions of a power system, underground portions of a power system, or enclosed portions of a power system.

Furthermore, it should be noted that the improvements herein are applicable to any system configured to determine a fault current magnitude under saturated CT conditions. Accordingly, any device, such as an IED, that obtains secondary current signals from a saturated CT may use the improvements herein to determine a fault current magnitude.

The improvements herein may be used to recreate an alternating current (AC) signal from a secondary current signal of a saturated CT. Any device that receives secondary current signals from a saturated CT may use the improvements herein to remove DC components from the sampled current signal and produce samples representative of a secondary current signal without distortions introduced by CT satu ration.

While specific embodiments and applications of the disclosure have been illustrated and described, it is to be understood that the disclosure is not limited to the precise configurations and components disclosed herein. For example, the systems and methods described herein may be applied to an industrial electric power delivery system or an electric power delivery system implemented in a boat or oil platform that may not include long-distance transmission of high-voltage power. Moreover, principles described herein may also be utilized for protecting an electric system from over-frequency conditions, wherein power generation would be shed rather than load to reduce effects on the system. Accordingly, many changes may be made to the details of the above-described embodiments without departing from the underlying principles of this disclosure. The scope of the present invention should, therefore, be determined only by the following claims.

What is claimed is:

1. A line-mounted device for an electric power delivery system, configured to determine a fault magnitude under conditions of a saturated current transformer (CT), comprising:

a current transformer in electrical communication with a conductor of the electric power delivery system, comprising a core and a winding including secondary leads;

sensor circuitry in electrical communication with the secondary leads, configured to:

calculate a frequency of a current signal on the electric power delivery system using a secondary signal from the secondary leads;

compare a current magnitude of the secondary signal against a predetermined fault current threshold;

when the current magnitude exceeds the predetermined fault current threshold, signal a controller of a fault condition;

the controller in communication with the sensor circuitry, comprising:

a processor;

a non-transitory computer-readable storage in communication with the processor, comprising instructions that when operated cause the processor to:

record samples of the secondary signal from the sensor circuitry to form a sampled secondary signal;

determine first and second peaks of the secondary signal;

calculate a first unsaturated region of the first peak of the secondary signal and a second unsaturated region of the second peak of the secondary signal;

determine valid pairs of samples from the sampled secondary signal within the first and second unsaturated regions;

calculate a DC component of the sampled secondary signal from the valid pairs of samples;

remove the DC component from the sampled secondary signal;

calculate a fault magnitude from the sampled secondary signal with the DC component removed; and

transmit the calculated fault magnitude to a consuming device for effecting a protective action on the electric power delivery system.

2. The line-mounted device of claim **1**, further comprising communication circuitry in communication with the processor for transmitting the calculated fault magnitude to the consuming device.

3. The line-mounted device of claim **1**, wherein each of the valid pairs includes a first sample in the first unsaturated region and a second sample in the second unsaturated region.

4. The line-mounted device of claim **3**, wherein the first sample and the second sample are separated by one power system cycle.

5. The line-mounted device of claim **1**, wherein the secondary signal is distorted due to saturation of the CT.

6. The line-mounted device of claim **1**, wherein the calculation of the fault magnitude comprises calculation of a fault current magnitude matrix as a function of the calculated frequency of the current signal.

7. The line-mounted device of claim **1**, wherein the calculation of the fault magnitude comprises use of a pre-populated fault current magnitude matrix associated with the calculated frequency of the current signal.

8. The line-mounted device of claim **1**, wherein the instructions further cause the processor to:

determine a third peak of the secondary signal;

calculate a third unsaturated region of the third peak of the secondary signal;

determine valid pairs of samples from the sampled secondary signal within the second and third unsaturated regions; and

wherein the fault magnitude is calculated as an average of a first fault magnitude calculated using valid pairs from the first and second unsaturated regions and a second fault magnitude calculated using valid pairs from the second and third unsaturated regions.

9. A system for protecting an electric power delivery system, comprising:

a line-mounted device comprising a current transformer (CT) in electrical communication with a conductor of the electric power delivery system, and comprising a controller configured to:

during a pre-event mode, record times of zero crossings of a secondary current signal from the CT;

upon detection of a fault condition:

record a time of the detection of the fault condition;

calculate a frequency of a current on the electric power delivery system using the times of zero crossings of the current signal;

record samples of the secondary current signal from the CT to form a sampled secondary signal;

determine first and second peaks of the secondary signal;

calculate a first unsaturated region of the first peak of the secondary signal and a second unsaturated region of the second peak of the secondary signal;

determine valid pairs of samples from the sampled secondary signal within the first and second unsaturated regions;

calculate a DC component of the sampled secondary signal from the valid pairs of samples;

remove the DC component of the sampled secondary signal using the calculated DC component;

calculate a fault magnitude from the sampled secondary signal with the DC component removed; and

transmit the calculated fault magnitude to a consuming intelligent electronic device (IED) for effecting a protective action on the electric power delivery system; and,

the IED in communication with a portion of the electric power delivery system configured to receive the calculated fault magnitude; determine the protective action based on information from the electric power delivery system; and, effect the protective action on the electric power delivery system by signaling a circuit breaker to open in response to the determined protective action.

10. The system of claim **9**, wherein each of the valid pairs includes a first sample in the first unsaturated region and a second sample in the second unsaturated region.

11. The system of claim **10**, wherein the first sample and the second sample are separated by one power system cycle.

12. The system of claim **9**, wherein the secondary current signal is distorted due to saturation of the CT.

13. The system of claim **9**, wherein the calculation of the fault magnitude comprises calculation of a fault current magnitude matrix as a function of the calculated frequency of the current signal.

14. The system of claim **9**, wherein the calculation of the fault magnitude comprises use of a pre-populated fault current magnitude matrix associated with the calculated frequency of the current signal.

15. The system of claim **9**, wherein upon detection of the fault condition, the controller is configured to:

determine a third peak of the secondary signal;

calculate a third unsaturated region of the third peak of the secondary signal;

determine valid pairs of samples from the sampled secondary signal within the second and third unsaturated regions; and

wherein the fault magnitude is calculated as an average of a first fault magnitude calculated using valid pairs from the first and second unsaturated regions and a second fault magnitude calculated using valid pairs from the second and third unsaturated regions.

16. A method of improving functioning of a line-mounted device in determining fault magnitude in presence of current transformer (CT) saturation, comprising the steps of:

before detection of a fault, the line-mounted device receiving a secondary current signal using the CT in electrical communication with an electric power delivery system, determining zero crossings of the secondary current signal, time stamping and recording the zero crossings, and comparing a magnitude of the secondary current signal with a predetermined fault current threshold;

calculate a power system frequency using the zero crossings;

upon the magnitude of the secondary current signal exceeding the predetermined fault current threshold, the line-mounted device:

sampling the secondary current signal to form a sampled secondary current signal;

determining first and second peaks of the secondary current signal using the sampled secondary current signal;

calculating a first unsaturated region of the first peak of the secondary signal and a second unsaturated region of the second peak of the secondary signal;

determining valid pairs of samples from the sampled secondary signal within the first and second unsaturated regions;

calculating a DC component of the sampled secondary signal from the valid pairs of samples;

removing the DC component of the sampled secondary signal; and

calculating a fault magnitude from the sampled secondary signal with the DC component removed; and

effecting a protection action on the electric power delivery system using the calculated fault magnitude.

17. The method of claim **16**, wherein each of the valid pairs includes a first sample in the first unsaturated region and a second sample in the second unsaturated region.

18. The method of claim **16**, wherein the fault magnitude is calculated using a pre-populated fault current magnitude matrix associated with the calculated power system frequency.

19. The method of claim **16**, further comprising the steps of:

determining a third peak of the secondary current signal;

calculating a third unsaturated region of the third peak of the secondary current signal;

determining valid pairs of samples from the sampled secondary signal within the second and third unsaturated regions; and

wherein the fault magnitude is calculated as an average of a first fault magnitude calculated using valid pairs from the first and second unsaturated regions and a second fault magnitude calculated using valid pairs from the second and third unsaturated regions.

20. A system for protecting an electric power delivery system, comprising:

a line-mounted device comprising a current transformer (CT) in electrical communication with a conductor of the electric power delivery system, and comprising a controller configured to:

during a pre-event mode, record times of zero crossings of a secondary current signal from the CT;

upon detection of an overcurrent condition using the secondary current:

record a time of the overcurrent condition;

calculate a frequency of a current on the electric power delivery system using the times of zero crossings of the current signal;

record samples of the secondary current signal from the CT to form a sampled secondary signal;

determine a first peak and a second peak of the secondary signal;

calculate a first unsaturated region of the first peak and a second unsaturated region of the second peak;

calculate a DC component of the sampled secondary signal;

remove the DC component from the sampled secondary signal;

calculate a fault magnitude from the sampled secondary signal with the DC component removed; and

transmit the calculated fault magnitude to a consuming intelligent electronic device (IED) for effecting a protective action on the electric power delivery system.

* * * * *