Aug. 9, 1927. 1,638,025

W. W. EVERTS

EXERCISING BED

Filed June 29. 1926

FIG. 5.

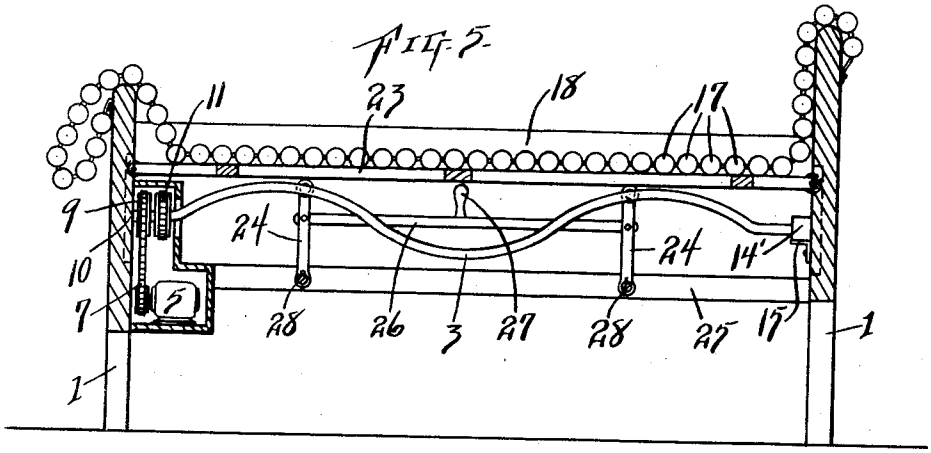

FIG. 4.

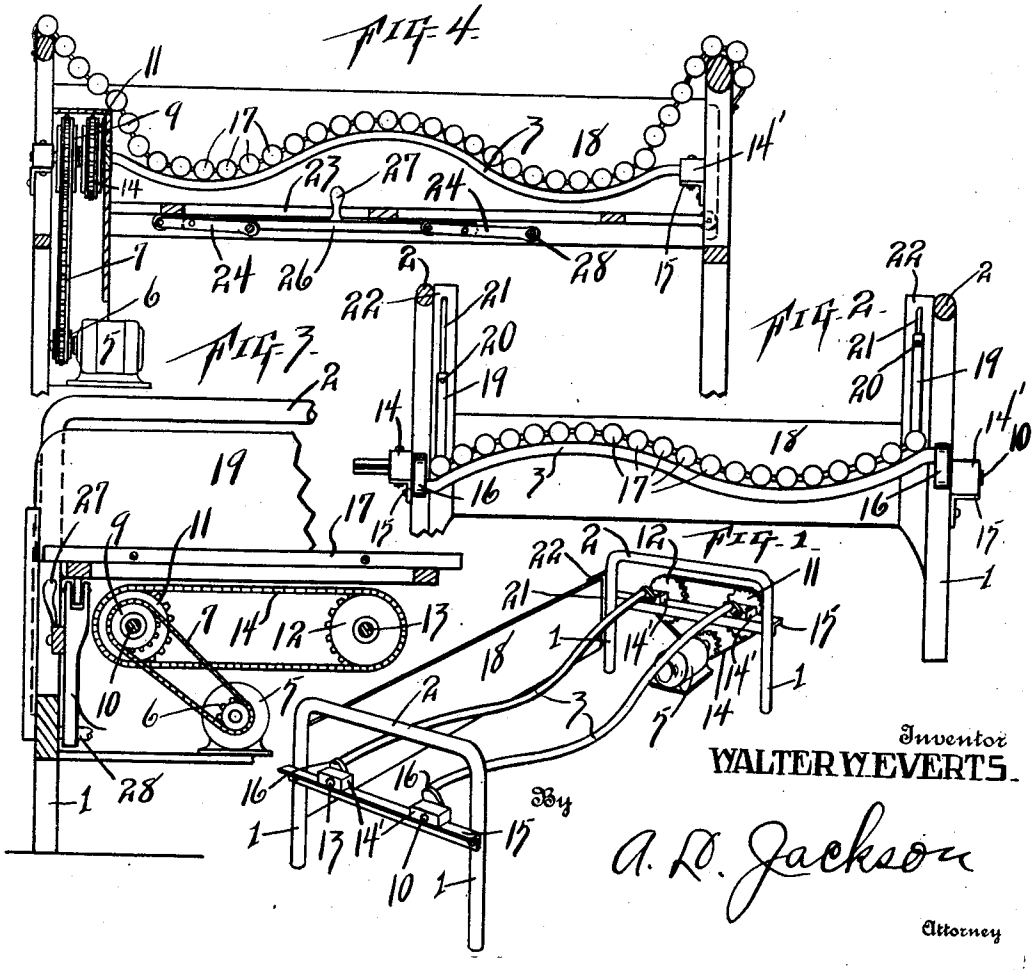

Inventor
WALTER W. EVERTS.

By A. D. Jackson

Attorney

Patented Aug. 9, 1927. 1,638,025

UNITED STATES PATENT OFFICE.

WALTER W. EVERTS, OF FORT WORTH, TEXAS, ASSIGNOR TO SID POST, C. H. CLARKE, AND A. G. McMATH.

EXERCISING BED.

Application filed June 29, 1926. Serial No. 119,343.

My invention relates to beds and more particularly to exercising beds; and the object is to equip a bedstead with means for exercising the body for keeping the body in good physical condition. It is the object to provide such devices which are applicable to bedsteads of ordinary type and also to provide bedsteads especially adapted for use with the improvements. One of the advantages of this invention is to improve the health conditions of the body and to make the body active and strong. Other objects and advantages will be fully explained in the following description and the invention will be more particularly pointed out in the claims.

Reference is had to the accompanying drawings which form a part of this application.

Fig. 1 is a perspective view of a bedstead with only the devices for exercising the body applied to the bedstead.

Fig. 2 is a longitudinal section in part, showing the arrangement of the exercising devices.

Fig. 3 is a broken end view, partly in section.

Fig. 4 is a side elevation of the bed with the side frame piece omitted and the body exercising slats shown in position for exercising the body and stationary supports let down so that the slats will not strike the exercising devices.

Fig. 5 illustrates the bed arranged for use as an ordinary bed without the exercising devices.

Similar characters of reference are used to indicate the same parts throughout the several views.

The bed shown is provided with ordinary upright legs 1 and connected at their upper ends by cross bars 2. Instead of the ordinary side bars connecting the front or head of the bed to make the head rigid with the foot of the bed, spiral bars 3 are provided and means are provided for revolving these bars 3. A motor 5 is located at any suitable position and provided with a driving pinion 6 which drives a sprocket chain 7. The chain 7 drives a sprocket wheel 9 which is rigid with shaft 10. A sprocket wheel 11 is rigid with shaft 10. A sprocket wheel 12 is rigid with a shaft 13 and a sprocket chain 14 is driven by wheel 11 and in this manner both shafts 10 and 13 are driven. The shafts 10 and 13 are stub shafts and are journaled in fixed bearings 14' which are attached to frame pieces 15 of the bed. The shafts 10 and 13 are operatively connected to the exercising spiral bars 3 by means of short cranks 16 which are rigid with shafts 10 and 13 and are revolubly connected to the exercising bars 3. The slats 17 are placed on the exercising bars 3 and flexibly connected to each other in series. The bends in the bars 3 must be symmetrical so that rising and fall of the slats 17 will be uniform from end to end. When the shafts or bars 3 are revolved, rising and falling motions are given to the body of a person lying on the slats 16, parts of the body going upwardly and other parts simultaneously going downwardly, the body being bent at pluralities of points at the same time.

The sides 18 of the bedstead serve as guides for the rising and falling motion of the slats 17. In the form shown in Figs. 1 to 3 inclusive, the end slats 17 are flexibly connected to boards 19 which are adapted to move vertically as the ends of the mat formed by the slats 17 rise and fall. The boards 19 have lugs 20 which project into and move vertically in slots 21 in frame members 22 which are rigid with the uprights 1.

In the form of the device shown in Figs. 4 and 5, the ends of the mat are extended over the head and foot boards and are attached to the outsides of these boards.

Means are provided for elevating the entire mat of slats 17 and holding the same elevated so that the bed can be used for holding a patient temporarily at ease for administering medicine, making examinations, taking temperatures, and for other purposes. A platform 23 composed of two longitudinal bars is provided. Link bars 24 are pivotally connected to the bars 23 and to the side bars 25 of the bed frame. A longitudinal bar 26 is pivotally connected to the link bars 24 and is provided with a handle 27. The rods 28 are rigid with the link bars 24 and run through to the opposite side and are journaled in the frame member 25 on the opposite side so that the link bars 24 on opposite sides will move the bars 23 vertically simultaneously. Fig. 4 shows the bars 23 let down out of the way of the exercising bars 3 and Fig. 5 shows

the bars 23 elevated to hold the slats 17 stationary.

Fig. 1 shows a variation in the gearing. One sprocket wheel is eliminated and one sprocket chain is eliminated. One chain drives the sprocket wheels 11 and 12 from the motor 5.

The main advantage of this invention is a movable bottom or a bed that has a flexible portion for supporting and exercising the body of a person lying thereon. It is apparent that different means may be used to move the slats vertically for securing the results set forth.

What I claim, is,—

1. An exercising bed comprising a bedstead, slats flexibly connected to each other and operatively connected to said bedstead, spiral rods operatively connected to said bedstead for moving said slats vertically at different points, and means for driving said rods.

2. An exercising bed comprising a bedstead, slats flexibly connected to each other in series and operatively connected to said bedstead, spiral rods operatively connected to said bedstead for moving said slats vertically at different points, and means for revolving said rods.

3. An exercising bed comprising a bedstead, a pair of spiral rods and cranks operatively connecting said rods to said bedstead, means for revolving said rods, a series of slats flexibly connected to each other and to said bedstead, vertical guide ways for the ends of said slats, and vertical guide boards for the sides of said slats.

4. An exercising bed comprising a bedstead, slats flexibly connected in series and connected to said bedstead, spiral rods operatively connected to said bedstead, means for revolving said rods for moving said slats vertically at different points, and means for lifting and holding said slats out of position to be moved by said rods when the bed is to be made temporarily stationary.

5. An exercising bed comprising a bedstead, a flexible movable bed bottom operatively connected to said bedstead, means operatively connected to said bedstead for causing systematically flexing motion of said bed bottom vertically intermediate the ends thereof, and means for driving the flexing means.

In testimony whereof, I set my hand, this 10th day of June, 1926.

WALTER W. EVERTS.