Office de la Propriété Intellectuelle du Canada
Un organisme d'Industrie Canada

Canadian Intellectual Property Office
An agency of Industry Canada

CA 2334304 A1 2001/08/22

(21) 2 334 304

(12) DEMANDE DE BREVET CANADIEN
CANADIAN PATENT APPLICATION

(13) A1

(22) Date de dépôt/Filing Date: 2001/02/06

(41) Mise à la disp. pub./Open to Public Insp.: 2001/08/22

(30) Priorité/Priority: 2000/02/22 (09/510,038) US

(51) Cl.Int.^{7}/Int.Cl.^{7} H01L 31/12, H04B 10/08

(71) Demandeur/Applicant:
LUCENT TECHNOLOGIES INC., US

(72) Inventeurs/Inventors:
MEYERS, MARK M., US;
O'BRIEN, STEPHEN, US

(74) Agent: KIRBY EADES GALE BAKER

(54) Titre : ENSEMBLE OPTIQUE
(54) Title: OPTICAL ASSEMBLY

(57) Abrégé/Abstract:
The invention, in accordance with one aspect, is an optical assembly (20) including a substrate (21), a light emitting device (22) mounted over a major surface of the substrate and having a back face (24), at least one channel (28) formed in the substrate near the back face of the light emitting device, and at least one photodetector (13) optically coupled to the light emitted from the back face. The channel includes at least one surface (32) adapted to receive a portion of the back face light and reflect it away from the photodetector so that the photodetector receives primarily direct light from the back face (FIG. 2).

Meyers-O'Brien 1-8

Abstract

The invention, in accordance with one aspect, is an optical assembly (20) including a substrate (21), a light emitting device (22) mounted over a major surface of the substrate and having a back face (24), at least one channel (28) formed in the substrate near the back face of the light emitting device, and at least one photodetector (13) optically coupled to the light emitted from the back face. The channel includes at least one surface (32) adapted to receive a portion of the back face light and reflect it away from the photodetector so that the photodetector receives primarily direct light from the back face (FIG. 2).

Meyers-O'Brien 1-8

OPTICAL ASSEMBLY

Field of the Invention

This invention relates to optical assemblies, and in particular to assembly structures which improve the detection of light from an optical device mounted on a substrate , as well as a method of forming such assemblies, and a transmitter and an optical network incorporating such assemblies.

Background of the Invention

Optical networks are the subject of increasing interest in telecommunications primarily due to their immense information handling capacity. One of the key elements of such a network is the wavelength tunable laser which allows the emission of several wavelengths from a single laser, and thereby provides multiple channels for transmission. In at least one form of the laser, light from the backface of the laser is used to lock the laser light onto the desired wavelengths.

In many types of present optical assemblies, the laser is mounted on a substrate, which is usually silicon, along with a lens near the front face, and a photodetector near the back face. A channel is used to reflect light from the back face onto the photodetector for monitoring the back face light. (See, e.g., U.S. Patent No. 5,881,193 issued to Anigbo.) A problem arises when the same type of substrate is used in an assembly where the back face light is employed for locking the light emission wavelength, as opposed to simply monitoring the back face light intensity. A photodetctor array used for locking is placed adjacent to the channel, and receives both direct light from the back face and reflected light from the channel. The secondary "beamlets" can corrupt the wavelength monitoring signal, which reduces the ability to lock the output wavelength of the laser. A different type of substrate might be employed, but it is more economical for most manufacturers to continue using the same type of substrate used for other devices.

It is desirable, therefore, to provide an assembly which increases the quality of the detected back face light for locking the wavelength of the emitted light and for other uses.

Meyers-O'Brien 1-8

Summary of the Invention

The invention, in accordance with one aspect, is an optical assembly including a substrate, a light emitting device mounted over a major surface of the substrate and having a face, at least one channel formed in the substrate near the back face of the light emitting device, and at least one photodetector optically coupled to the light emitted from the face. The channel includes at least one surface adapted to receive a portion of the face light and reflect it away from the photodetector so that the photodetector receives primarily direct light from the back face.

Brief Description of the Figures

These and other features of the invention are delineated in detail in the following description. In the drawing:

Fig 1 is a schematic diagram of a portion of an optical network including an optical assembly in accordance with an embodiment of the invention;

Fig 2 is a cross sectional view of a portion of an optical assembly in accordance with an embodiment of the invention; and

Fig. 3 is a plan view of a portion of the assembly illustrated in Fig. 2.

It will be appreciated that, for purposes of illustration, these figures are not necessarily drawn to scale.

Detailed Description

Fig 1 illustrates a portion of a typical optical network incorporating principles of the invention. An optical transmitter, 15, provides an optical signal which is transmitted over an optical fiber, 12, to a receiver, 13, where the optical signal is converted to an electrical signal. Amplifiers (not shown) such as Erbium-doped fiber amplifiers, , as well as other elements, can also be included between the transmitter, 15, and the receiver 13.

The transmitter, 15 includes a source, 11, of the optical signal, which may include a semiconductor laser or other optical device. The laser typically emits the light signal from a front face and also emits light from a back face. The back face light is coupled to a device, 12, where transmission is wavelength dependent such as a Fabry-Perot etalon, such that the optical output of the filter is a function of the wavelength of the back face light. The output of the filter is optically

coupled to one or more photodetectors, 13, which convert the light to an electrical signal. The resulting electrical signal is coupled to a wavelength control circuit, 14, which produces an electrical signal in response to the photodetector signal. The output from the wavelength control signal can be used, for example, to control the bias to the laser, or to control a thermo electric cooler to adjust either the bias or the temperature in order to lock the laser signal to desired wavelengths. In many systems, it may be desirable to split the back face signal into two beams, with one serving as a reference signal. The wavelength control circuitry may include analog and/or digital circuitry.

Fig 2 illustrates an optical assembly, 20, which may be incorporated into the optical source, 11, in accordance with an embodiment of the invention and Fig. 3 is a plan view of a portion of the optical assembly. The assembly includes a substrate, 21, which is preferably silicon or other crystallographic material. A light emitting device, 22, is preferably mounted on the top major surface of the substrate. In this example, the device is a semiconductor laser, such as an Electro-absorption Modulated (EML) laser or a Distributed Feedback (DFB) laser, but could be other types of light emitting devices. The device preferably has a front face, 23, and a back face, 24, from which light is emitted. The front face light usually comprises the signal light which is coupled to the network, while the back face light is used for determining the wavelength of the emitted light for purposes of locking the signal light to a desired wavelength. A modulator (not shown) which is integral with the laser, as in an Electroabsorption Modulated Laser, or separate therefrom, can also be included on the top surface.

A spherical lens, 25, (ball lens) is preferably mounted within a channel, 26, etched in the substrate surface in close proximity to the laser, 22. The lens, 25 functions to collimate the light emitted from the front face so that the light can be coupled to the optical fiber (12 of Fig 1). Desirably, an optical isolator (not shown) may be placed between the lens 25 and the fiber.

At least one additional, and in this example, two channels, 28 and 29, were formed in the surface of the substrate in close proximity to, and in this example adjacent to, the rear face, 24, of the laser. It will be recognized that in certain prior designs, a v-channel was formed with sloping end wall so that light from the back face would be reflected from the bottom and end wall onto the major surface of a photodetector which was mounted on the top surface of the substrate extending over the channel. (See U.S. Patent No. 5,881,193, previously cited.) For purposes of locking, the photodetector, 13, preferably includes an array of photodetectors which receive light from different portions of an etalon, 12, through a collimating lens, 27, all of which are mounted in a ceramic carrier, 40, in close proximity to the back face. In the presently preferred design, the

channels, 28 and 29, comprise at least two, V-grooves, with their vertexes, 30 and 31, essentially parallel to the rear face, 24, of the laser, 22. This provides at least one surface, and in this example two surfaces, 32 and 33, which are at an angle ,θ, e.g., 35.3°, other than 90 degrees with respect to the rear face of the laser, and preferably no greater than 60 degrees to the rear face. Consequently, the surfaces, 32 and 33, are oriented such that light from the rear face which is propogated toward the channel, 28, represented by arrow 34, is reflected away from the photodetector, 13, while direct light, represented by arrows, 35, is incident upon the photodetector. In this embodiment, the first V-groove surface, 32, reflects most of the light propogating toward the substrate, 21, while the second V-groove surface, 33, reflects glancing light from the back face which propogates past the first V-groove. The photodetectors, therefore, receive primarily only direct light from the laser (i.e. non-reflected light) which enhances the quality of the detected light. Preferably, the light received by the photodetectors is at least 97 percent direct light. One effect of the V-grooves, therefore, is to act as an integral beam dump which deflects undesired portions of the beam from the field of view of the wavelength control circuitry (14 of Fig 1.)

In a typical example, the major surface of the silicon substrate, 21, lies in the <100> crystallographic plane, and the surfaces, 32 and 33, would lie in the <111>crystallographic planes as a result of the etching of the top surface. This forms an angle, θ, of approximately 35.3degrees with the back face. The light emitted from the back face usually covers a range of angles in the range 0-35 degrees. Light from the back face which is incident on the silicon in the V-grooves at an angle larger than the critical angle of silicon (approximately 16 degrees) is reflected. Light incident at less than this angle is partially transmitted and partially reflected, but is still removed from the field of view of the photodetectors. An appropriate range of angles, θ, would be 10-75 degrees.

The assembly, 20, may be fabricated generally by standard bonding and etching techniques. The channels, 27 and 28, may be formed for example using a photoresist mask and wet etching.

Various modifications of the invention as described are possible. For example, the undesired light need not be reflected upward as shown, but could be reflected in other directions by an appropriate choice of the orientation of the reflecting surfaces, 32 and 33, as long as the light is reflected away from the photodetector. It should also be understood that the term "V-groove" includes truncated forms of the V-grooves illustrated in Fig 1, i.e. the bottom of the groove is flat.

Meyers-O'Brien 1-8

Claims

What is claimed is:

1. An optical assembly comprising:

a substrate (21);

a light emitting device (22) mounted over a major surface of the substrate and having a face; (24)

at least one channel (28) formed in the substrate near the face of the light emitting device; and

at least one photodetector (13) optically coupled to the light emitted from the face, the channel including at least one surface (32) adapted to receive a portion of the face light and reflect it away from the photodetector so that the photodetector receives primarily direct light from the face.

2. The assembly according to claim 1 wherein the substrate comprises silicon.

3. The assembly according to claim 1 wherein the light emitting device comprises a semiconductor laser.

4. The assembly according to claim 1 wherein the channel comprises at least one V-groove formed in the substrate.

5. The assembly according to claim 4 wherein the V-groove has a vertex (30) which is essentially parallel to the face.

6. The assembly according to claim 5 wherein the V-groove has a sloped wall (32) facing the face which makes an angle within the range 10 to 75 degrees with the face.

7. The assembly according to claim 4 wherein the substrate is silicon and the V-groove has surfaces in the <111>crystallographic plane.

8. The assembly according to claim 4 wherein the channels comprise at least two V-grooves. (28, 29)

9. The assembly according to claim 1 wherein the face is the back face of the device.

10. An optical assembly comprising:

a substrate (21) comprising silicon;

a semiconductor laser (22) mounted over a major surface of the substrate and having a back face (24);

at least one V-groove (28) formed in the substrate near the back face of the laser, the groove including surfaces (32) formed in the <111>crystallographic plane of the substrate; and

an array of photodetectors (13) optically coupled to light from the back face of the laser,

at least one of the surfaces of the V-groove adapted to receive a portion of the light from the backface and reflect it away from the photodetectors so that the photodetectors receive only direct light from the back face.

11. An optical transmitter (15) comprising an optical assembly (20), an optical filter (12) optically coupled to the assembly, at least one photodetector (13) optically coupled to the filter, and control circuitry (14) electrically coupled to the photodetector, the assembly comprising:

a substrate (21);

a light emitting device (22) mounted over a major surface of the substrate and having a face (24);

at least one channel (28) formed in the substrate near the face of the light emitting device, the

photodetector being optically coupled to the light emitted from the face, and the channel including at least one surface (32) adapted to receive a portion of the face light and reflect it away from the photodetector so that the photodetector receives primarily direct light from the face.

12. An optical network comprising a transmitter (15), an optical fiber (12) optically coupled to the transmitter, and a receiver (13) optically coupled to the fiber, the transmitter comprising an optical assembly comprising:

a substrate (21);

a light emitting device (22) mounted over a major surface of the substrate and having a face (24);

at least one channel (28) formed in the substrate near the face of the light emitting device; and

at least one photodetector (13) optically coupled to the light emitted from the face, the channel including at least one surface (32) adapted to receive a portion of the face light and reflect it away from the photodetector so that the photodetector receives primarily direct light from the back face.

Meyers-O'Brien 1-8

13. A method of forming an optical assembly comprising the steps of:

mounting a light emitting device (22) having a face (24) over a major surface of a substrate (21);

mounting a photodetector (13) so as to receive light emitted from the face; and

forming a channel (28) in the substrate in close proximity to the face, the channel including at least one surface (32) adapted to receive a portion of the light from the face and reflect it away from the photodetector so that the photodetector receives primarily direct light from the face.

14. The method according to claim 13 wherein the channel is formed by etching the major surface of the substrate.

15. The method according to claim 14 where the etching forms at least one V-groove in the channel.

16. the method according to claim 15 wherein the substrate is silicon, and the V-groove has walls in the <111> crystallographic plane of the substrate.

FIG. 1

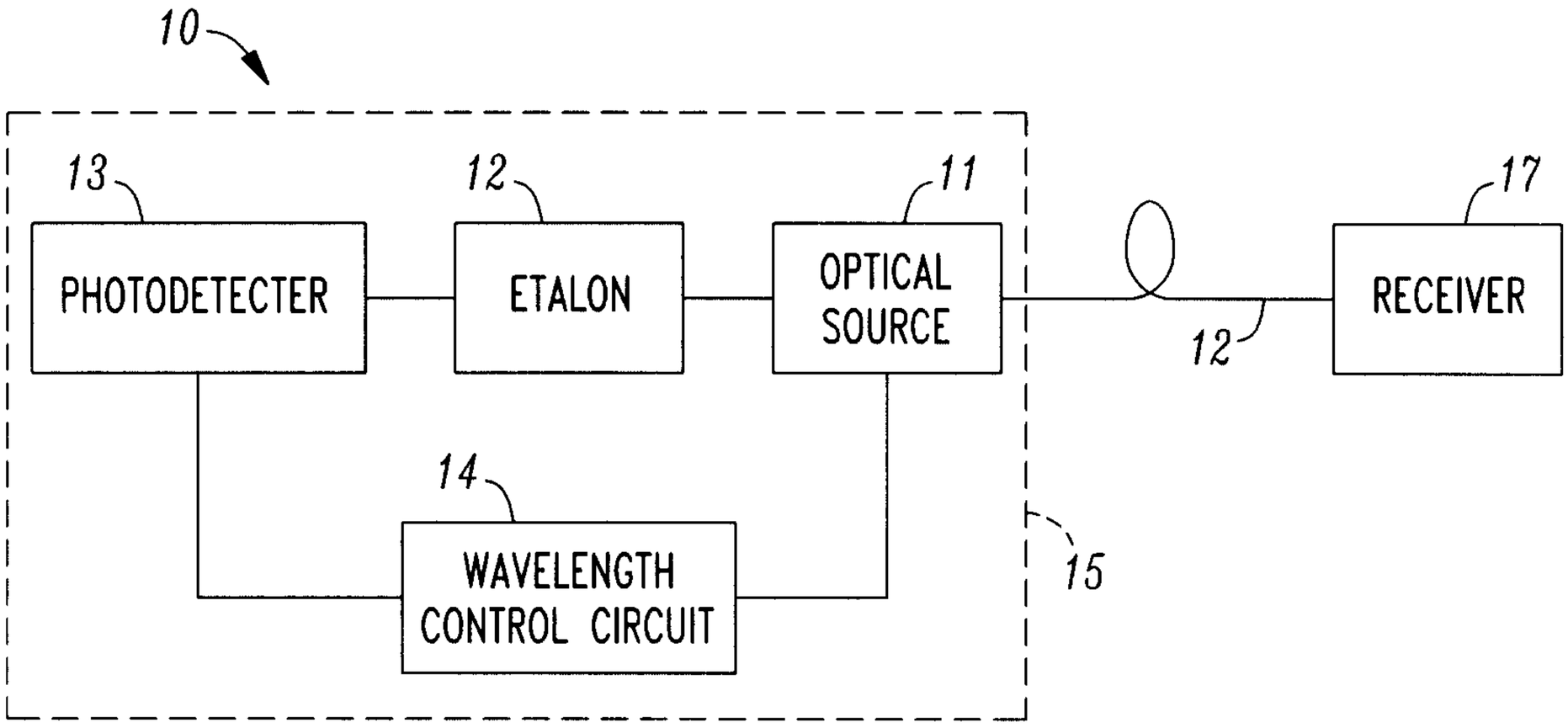
10
13
PHOTODETECTER
12
ETALON
11
OPTICAL SOURCE
12
17
RECEIVER
14
WAVELENGTH CONTROL CIRCUIT
15

FIG. 2

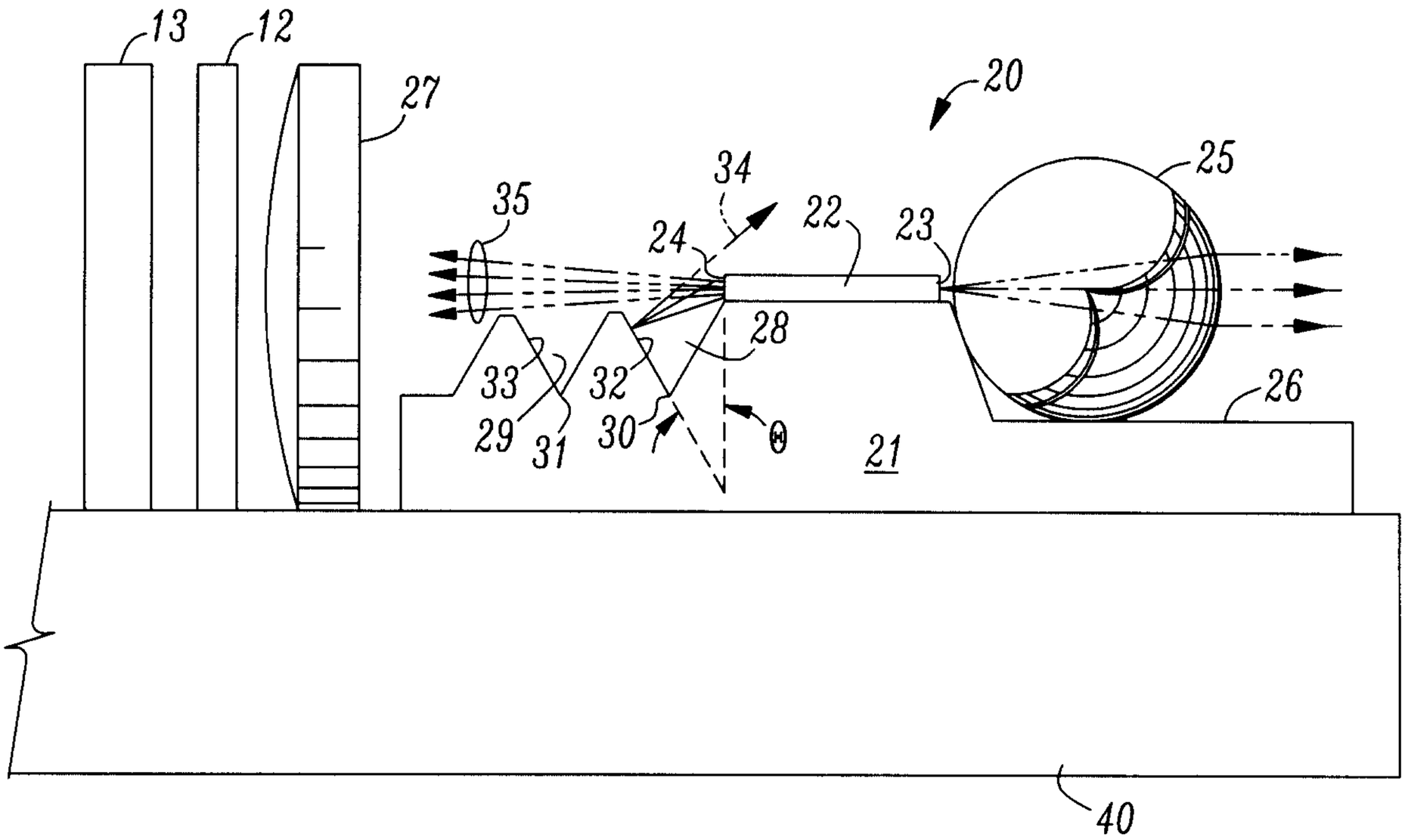
13
12
27
20
35
34
24
22
23
25
28
33
32
29
31
30
θ
21
26
40

FIG. 3

