Sept. 30, 1952 A. F. ANGELICOLA 2,612,238

ELEVATOR SYSTEM

Filed Dec. 31, 1949 4 Sheets-Sheet 1

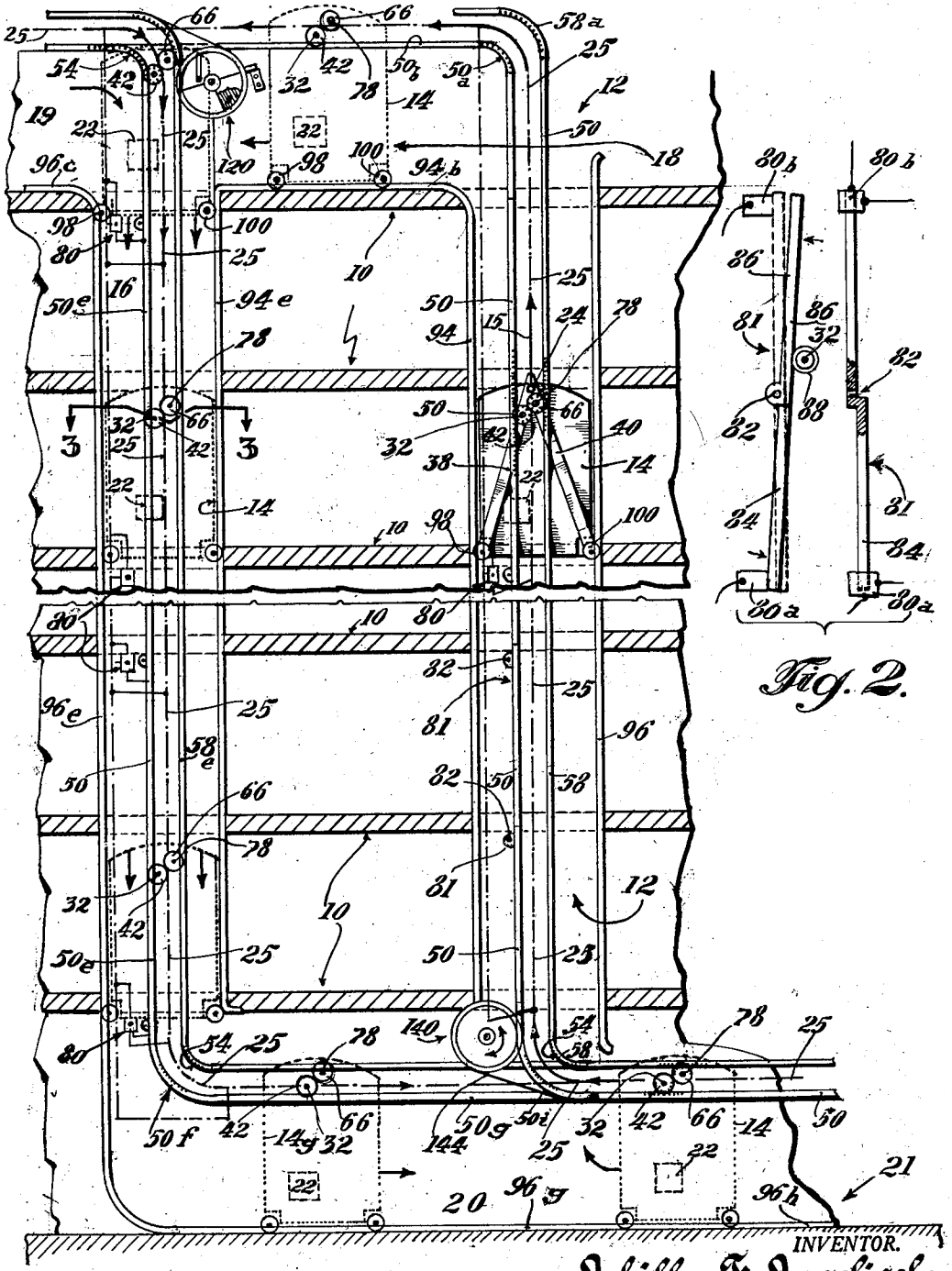

Fig. 2.

Fig. 1.

INVENTOR.
Achilles F. Angelicola
BY
Irving F. Goodfriend
Attorney

Sept. 30, 1952 A. F. ANGELICOLA 2,612,238

ELEVATOR SYSTEM

Filed Dec. 31, 1949 4 Sheets-Sheet 2

Fig. 3.

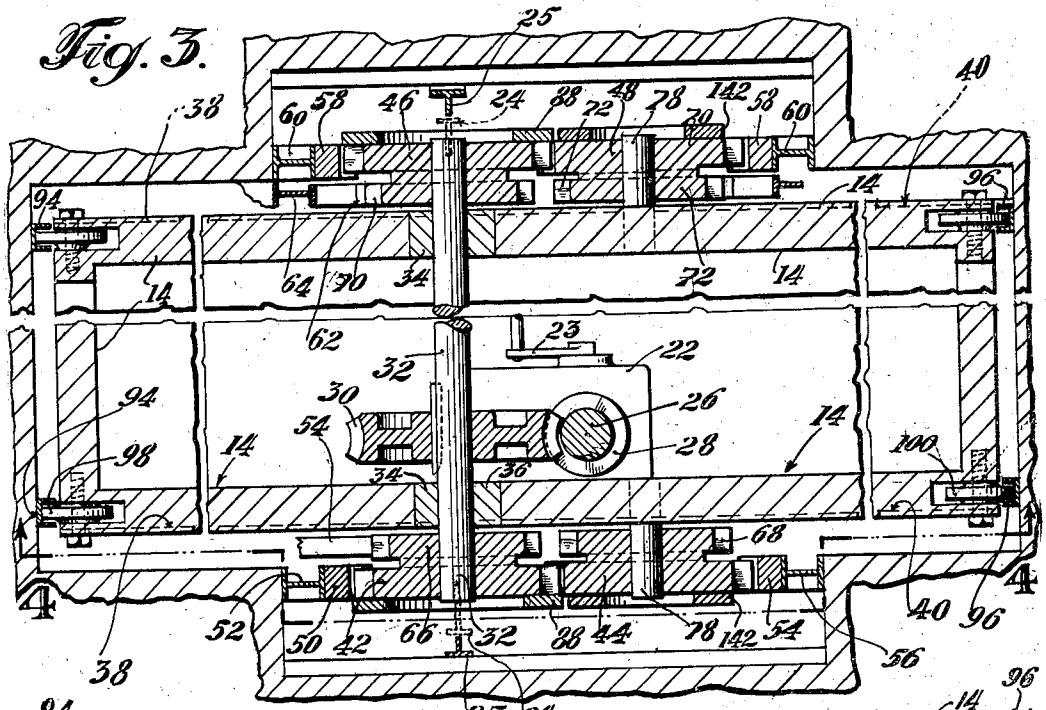

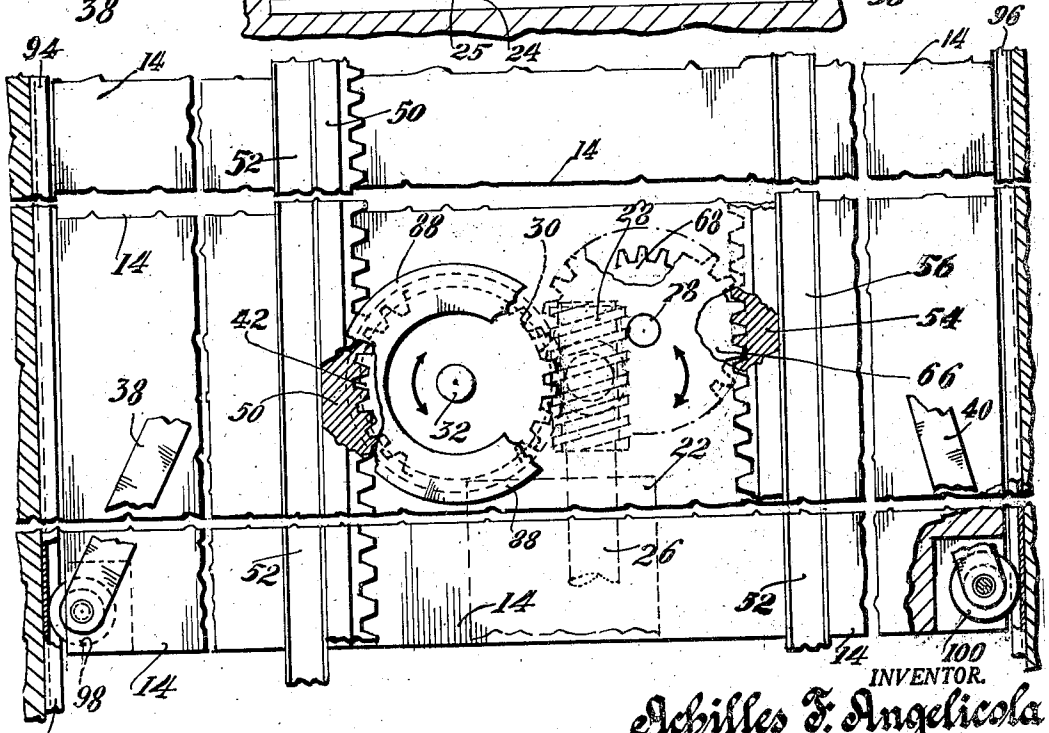

Fig. 4.

INVENTOR.
Achilles F. Angelicola
BY
Irving F. Goldfriend
Attorney

Sept. 30, 1952 A. F. ANGELICOLA 2,612,238

ELEVATOR SYSTEM

Filed Dec. 31, 1949 4 Sheets-Sheet 3

Fig. 5.

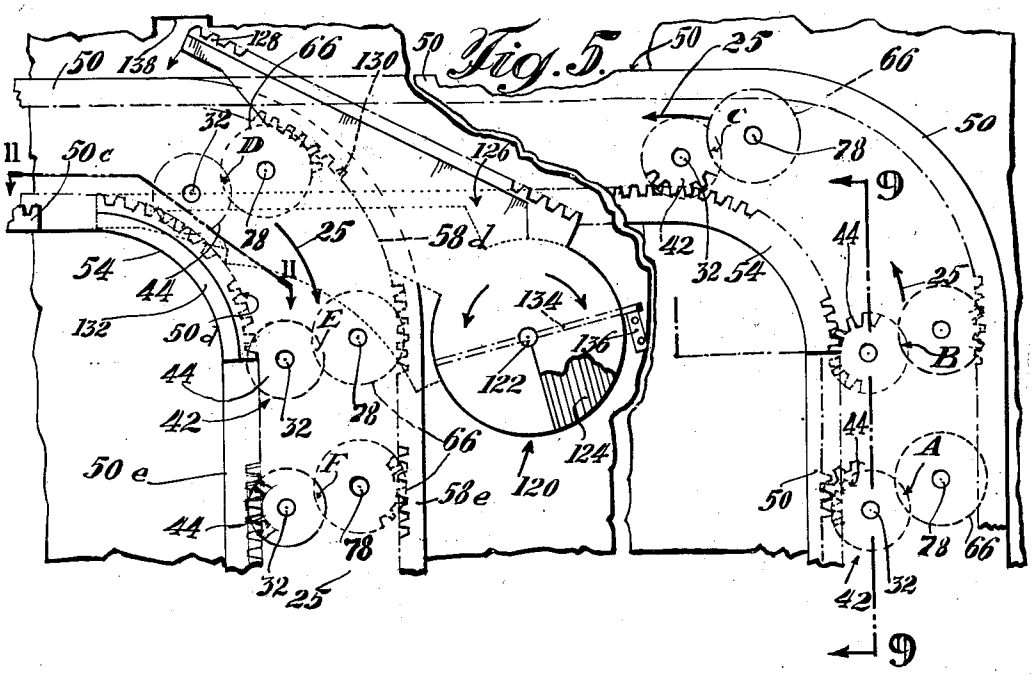

Fig. 6.

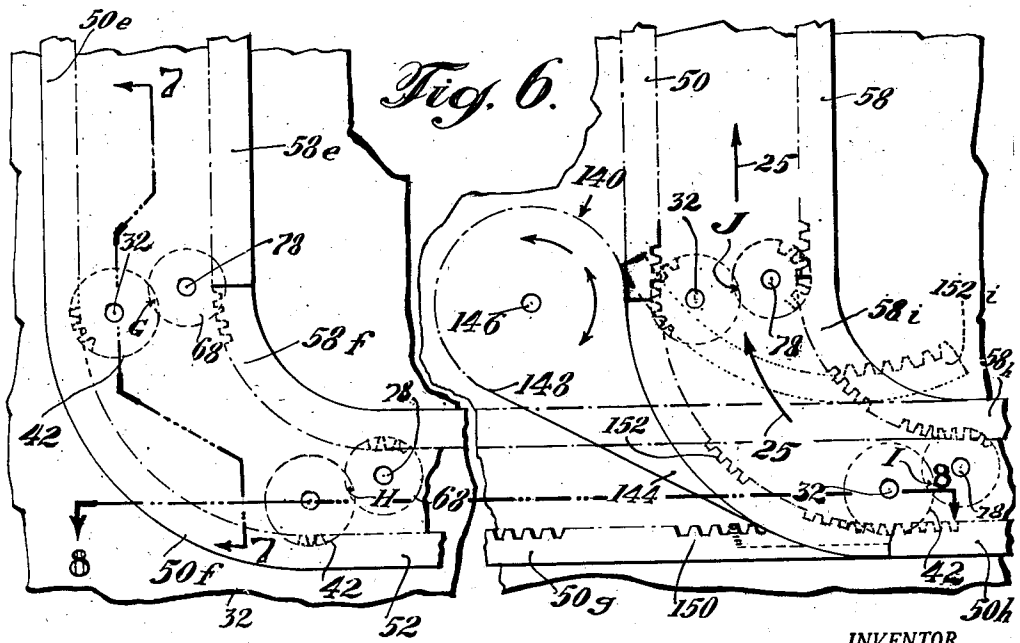

INVENTOR.
Achilles F. Angelicola
BY
Irving F. Goodfriend
Attorney

Sept. 30, 1952 A. F. ANGELICOLA 2,612,238

ELEVATOR SYSTEM

Filed Dec. 31, 1949 4 Sheets-Sheet 4

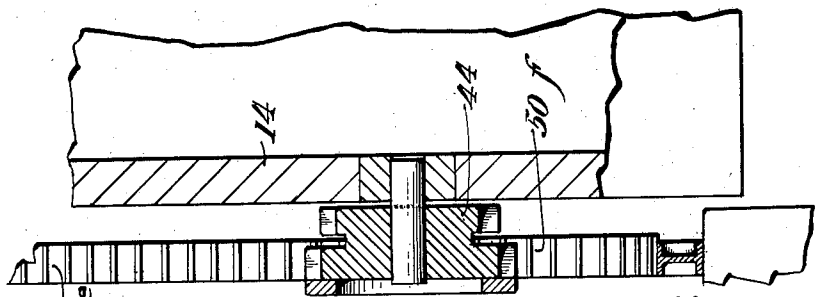

Fig. 7.

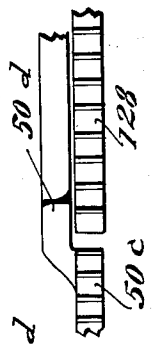

Fig. 10.

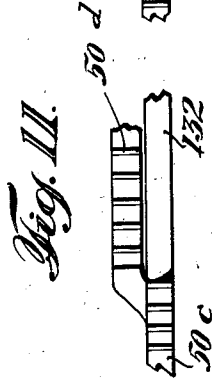

Fig. 11.

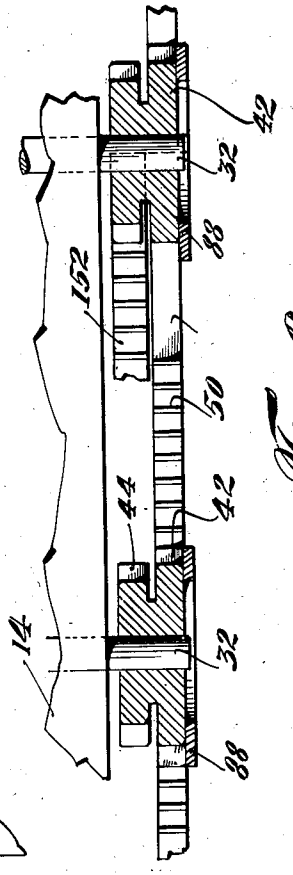

Fig. 8.

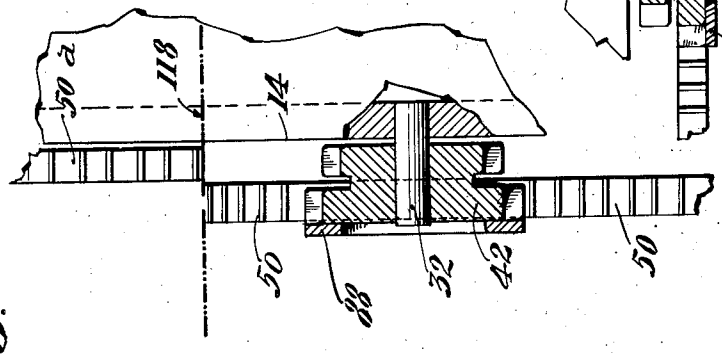

Fig. 9.

INVENTOR.
Achilles F. Angelicola
BY
Irving F. Goodfriend
Attorney

Patented Sept. 30, 1952 2,612,238

UNITED STATES PATENT OFFICE

2,612,238

ELEVATOR SYSTEM

Achilles F. Angelicola, North Bergen N. J.

Application December 31, 1949, Serial No. 136,274

9 Claims. (Cl. 187—16)

1

The present invention relates to a railroad system so constructed and arranged that it may be installed as an elevator system in a building.

My invention contemplates the provision of an elevator system for a building in which any elevator car may travel independently of any other car in the same direction of travel and in the same shaftway.

The present invention contemplates the provision of an elevator system having a plurality of shaftways in which a plurality of cars may travel in the same direction independently of one another; a first mentioned vertical shaftway in which the cars ascend between the floors of the building, a second mentioned vertical shaftway in which the same cars descend in the building, a first mentioned horizontal shaftway at the top of the building in which the cars are transferred from the first vertical shaftway to the second vertical shaftway for their descent and a second mentioned horizontal shaftway at the bottom of the building in which the cars may be transferred from the second vertical shaftway to return to the first shaftway for a repeated ascent of the building and travel around the elevator system. Thus, an elevator car may be operated in a continuous path around a continuous shaftway or trackway thereby eliminating the necessity of the car traveling in two different directions (up and down) in the same shaftway.

The present invention thus permits a plurality of cars to travel independently of each other in the same shaftway and in the same direction between the floors of the building thereby eliminating the conventional and usual multiplicity or bank of shaftways in each of which shaftways a single car travels both in the up and down direction. Thus, the flexibility and speed of service provided by a bank of elevator cars will be obtained by my elevator system in which more than one car is operated in the same shaftway.

The present invention further contemplates the provision of switches which function so that each car can travel only in one direction in a vertical shaftway. These switches are arranged and constructed so that they are operated by the car that is being transferred from one vertical shaftway to the other vertical shaftway to open the particular horizontal or transfer shaftway which connects them and which is normally closed, whereby movement of the elevator car from the one vertical shaftway to the other vertical shaftway is permitted. After the elevator car has moved away from the switch into position for its further movement in the other shaftway to which it has sought transfer, the switch is released and spontaneously returns to its normal position to again close this horizontal or transfer shaftway to thereby block return of the car to the shaftway from which it has emerged at the point of emergence.

The present invention further contemplates the provision of such an elevator system in which

2

the car is preferably driven by a self contained electric motor to which electric power is automatically switched off whenever another car is in a selected section of track in advance of that section of track in which the said succeeding car is located. Thus, in addition to conventional signals and other means, provision is made to prevent a succeeding car from "running into" the preceding car by effectively and automatically cutting off the power to the motor of the succeeding car, blocking off the progress of the succeeding car or otherwise preventing a succeeding car from approaching a preceding car any closer than a selected or pre-established distance without the full knowledge of the operator of the succeeding car.

The present invention still further contemplates the provision in an elevator system of an elevator car that is not raised and lowered by means of a cable or of a piston, but is provided with its own power plant which moves the car through gear means of the rack and pinion principle.

Since in my elevator system, a plurality of cars may concurrently ascend in one shaftway and concurrently descend in another shaftway independently of each other, no cable or counterweight is used. In prior elevator systems, the counter-weight used becomes proportional to the load in the car. If the counter-weight is overloaded, it has a tendency to permit the car to drop and if it is underloaded, there is a tendency for the car to rise.

In distinction, in an elevator system embodying the present invention, I propose driving the elevator car by means of power gear, idlers and racks or cog rails. Thus, in vertical operation on opposite sides of the car, a power gear engages one of the cog rails or racks mounted in the shaftway and rotates in one direction, driving the idler gear in the opposite direction, which idler gear engages another or opposed cog rail or rack. The power gear balances the weight of the car, while the idler gear merely forces the power gear to maintain the desired mesh with the cog rail or rack in the vertical shaftways. With the present construction, therefore, there is obtained a smoothness of operation not heretofore encountered since by this construction, it will not matter whether the elevator car is overloaded or underloaded, which would not be true where a counterweight is used.

The present invention still further contemplates the provision of a storage space for cars which are not required in operation. Such storage yards may be located at any convenient point reachable by a transfer track, for example, at the highest and at the lowest levels of the shaftways, or either.

These, other and further objects and advantages of my invention will be clear from the following description and the drawings appended thereto, in which:

Fig. 1 is a schematic side elevation of a continuous or endless shaftway and an elevator car constructed pursuant to my invention, partially broken away to condense the drawing.

Fig. 2 is a side elevation and partial section of a power cut-off lever that may be used in the practice of my invention.

Fig. 3 is a section on the line 3—3 of Fig. 1, broken away to condense the drawing.

Fig. 4 is a view on the line 4—4 of Fig. 5 broken away to condense the drawing.

Fig. 5 is a schematic partial view of the two vertical shaftways, the horizontal transfer shaftway, the car directional movement transfer switch at the top level and illustrating the different positions assumed by the driving gears or pinions and idler gears as they move on the curved portions of the cog rail or rack.

Fig. 6 is a similar schematic partial view at the lowermost level.

Fig. 7 is a view on the line 7—7 of Fig. 6.

Fig. 8 is a view on the line 8—8 of Fig. 6.

Fig. 9 is a view on the line 9—9 of Fig. 5.

Fig. 10 is a view on the line 10—10 of Fig. 5.

Fig. 11 is a similar view with the transfer switch in open position.

Reference shall now be made to the drawings, in which it will be understood that only so much of the details of construction are illustrated and described as will be necessary for an understanding of my invention, and more particularly to Fig. 1.

In the drawings and description, my invention is illustrated as applied to an elevator system installed in a building having a plurality of floors, indicated generally by the reference character 10 and any particular or specific flaw by such reference character 10 accompanied by a designated letter.

A vertical shaftway 12 is provided for the elevator car when ascending the building which elevator car is indicated by the reference character 14, and also when referring to the car at a specific position in the building by such reference character 14 accompanied by a particular letter. To transfer the car 14 so that its movement around the building will be continuous, I provide the system of shaftways which I shall now describe. The car 14 is moved upwardly in the direction of the arrow 15 into the down shaftway 16 through the horizontal or transfer shaftway 18 located at the top of the building.

At the bottom of the building, a second horizontal shaftway 20 is provided through which the car is transferred from the vertical shaftway 16 to the vertical shaftway 12 in position to again ascend the building.

Thus, there is provided a continuous shaftway around which a car may travel up and down in a building which it serves.

It will be understood that these horizontal shaftways 18 and 20 are long enough so that they provide storage spaces 19 and 21 (which need not be illustrated in detail since they will be similar to the shaftways from which they continue) in which spare cars 14 or those not in operation may be stored for use when required.

Each car 14 is provided with a self-contained driving motor 22 (see Fig. 3), having the controller 23. Current is supplied for operation of this motor through the contact shoes 24, which are of a conventional type and which engage throughout the travel of the car 14 the third rails 25 which are located in the shaftways and suitably insulated.

The motor shaft 26 has mounted on it the worm 28 which drives the gear 30 mounted on the countershaft 32, journaled for rotation in the bearings 34 and 36, supported in the sides of the car 14.

On each side of the car, inclined carrying members 38 and 40 may be mounted to provide desirable rigidity to the car.

The carrying members may be formed from conventional angle irons and mounted in the sides of the car.

The car is driven by the motor 22 and a driving unit on each side of the car. The driving unit on one side of the car comprises the driving gear 42 and the idler gear 44 and on the other side the driving gear 46 and idler gear 48.

The gear 42 engages the cog rail or rack 50 which is mounted on the I beam 52 in the up or ascending shaftway 12 and the idler gear 44 engages the opposed cog rail or rack 54 mounted on I beam 56. On the other side of the up or ascending shaftway 12, the driving gear 46 engages the cog rail or rack 58 mounted on the I beam 60 and the idler gear 48 engages the cog rail or rack 62 mounted on the I beam 64.

The gear 42 is integral with the inner smaller diameter gear 66 and the idler gear 44 is integral with the inner smaller diameter idler gear 68. On the other side of the car, the driving gear 46 is integral with the smaller diameter gear 70 and the idler gear 48 is integral with the smaller diameter idler gear 72. I shall hereinbelow describe the purposes for which these smaller diameter gears are used.

The driving gear or pinion 42 is set on the countershaft 32 which is mounted through the bearing 34 in the inclined members 38 and 40. On the other side of the car 14 the driving gear or pinion 46 is also set on the said countershaft 32, which is here mounted through bearing 36 in the inclined members 74 and 76. The purpose of inclining these members will become apparent in my later description.

The motor 22 through the worm 28 and gear 30 rotates the countershaft to drive the car 14 driving the gears or pinions 42 and 46 and the idler gears 44 and 48 which raise or lower the car as a unit on the cog rails or racks in the manner of double rack and pinion assemblies, as I shall further describe in detail.

Since the power gears or pinions 42 and 46, in the movement of the car 14, are rotated on the cog rails or racks 50 and 58 in one direction, the idler gears 44 and 48 on the other cog rails or racks 54 and 62 in the opposite direction, these units in addition constitute the equivalent of a counterweight for the elevator car. By reason of this construction, comparatively smooth operation of the car is obtained irrespective of whether the elevator car is overloaded or underloaded. Occupants of the car, constructed and operated in accordance with the present invention, do not experience an unpleasant sensation when the car is stopped or started.

In order that a car 14 will hold the position normally desired, the countershaft 32 is anchored as high as possible over the center of gravity of the elevator car. It should be noted that the shaft 78 on which the idler gears are mounted, is positioned higher than the shaft 32, on which the driving gears or pinions are mounted.

Electrical power is supplied to the motor 22 from the third rail 25 to rotate the countershaft 32 and consequently the gears or pinions 42 and 46 and through them the idler gears 44 and 48,

driving the car 14 on the cog rails or racks in the vertical up shaftway 12 and vertical down shaftway 16. When the car is transferred from the shaftway 12 to the shaftway 16, along the upper horizontal shaftway 18 and returned from the shaftway 16 to the shaftway 12 along the lower horizontal shaftway 20, the idler gears 44 and 48 do not engage a cog rail or rack, which is omitted in these horizontal shaftways.

To prevent a succeeding car from running into a car that is preceding it in the same shaftway, in addition to the usual signals ordinarily used, I provide means for effectively and automatically shutting off power to the section of the third rail 25 in rear of the preceding car by direct and by remote control operating the electrical switch 80. The means illustrated in Fig. 2 may be used for interlocking operation as well as for an emergency manual operation.

At suitable points in the installation, I locate an electrical switch 80 through which current is supplied to or cut off from the predetermined section of the third rail.

At each floor 10, I mount an interlocking power cut-off lever 81 (see Fig. 2).

These power cut-off levers 81 are pivoted at 82 in the shaftways and comprise a lower element 84 (below the pivot 82) and an upper element 86 (above the pivot 82).

On the outer side of the driving gears 42 and 46, I mount the ring 88 which, as the car moves in the proper direction in the shaftway, engages a power cut-off lever 81, referring now to Fig. 1 and more particularly to Fig. 2, for the purposes that I shall now describe.

To understand the operation of the cut-off lever 81, reference is now made to the schematic view illustrated in Fig. 2. As the car ascends the shaftway 12, upon clearing the pivot 82, the ring 88 is brought into engagement with the upper element 86 of a power cut-off lever 81, positioned at the proper interval in the shaftway.

The lower element 84 is brought away from a switch (in Fig. 2 indicated by the reference character 80*a*) to open or break the circuit to that section 90 of the third rail below the pivot 82 and which section of the shaftway 12 the car is then leaving. It will be recognized that the power cut-off lever 81 is rotated in a counterclockwise direction about the pivot 82 (as viewed in Fig. 2, the left part thereof from the broken lines to the full lines).

It will be understood that the normal position of the power cut-off lever 81 is such that the first or lower element 84 normally keeps the power switch 80*a* closed and the section of the third rail it controls, alive with power; that, upon ring 88 coming in contact with the second or upper element 86, the lever 81 rotates in a counterclockwise direction about the pivot 82; and that, upon ring 88 clearing the tip of the said second or upper element 86, the said power cut-off lever 81 automatically returns to its normal position.

As the car continues to move upward in the shaft 12 and clears the second or upper element 86, it (the upper element) is now automatically rotated in a clockwise direction, concurrently the first or lower element 84 is rotated in a similar (clockwise) direction against the switch 80*a* to close it and thus energize the section of the third rail it controls.

However, the first or lower element 84 of that particular power cut-off lever is rotated in a counterclockwise direction away from the switch 80*a* thereby cutting off power to the section 90 of the third rail below the section 92 in the shaftway in which the car is moving.

Thus, a succeeding car is prevented from entering the shaftway in which the section 90 is located since power thereto has been cut off by the action of the car in the particular power cut-off lever 81 zone, controlling power to those sections of the third rail in the shaftway in which a car has left and another is entering. A succeeding car is thereby prevented from approaching the preceding car any closer than the pre-established distance, the length of the third rail section 90.

It will of course be understod that switches 80 are of the make and break type and that levers 81 are interlocking; that is, a circuit to a succeeding third rail section is opened just prior to closing the circuit to the preceding third rail section.

To permit a reasonable tolerance in the operation of a car 14, a pair of opposed guide rails 94 and 96 are mounted in the shaftways (see Figs. 3 and 4) on each side thereof. At the lower end of each carrying member 38 and 40, I mount a guide wheel 98 and 100, which ride on the guide rails 94 and 96, holding the car in a vertical position and preventing its swaying in the shaft. It will of course be understood that similar guide rails are provided on the other side of the shaftway, in which similar guide wheels, mounted on the car, operate.

The inner guide rail 94 (as viewed in Fig. 1 to the left thereof) in the up shaftway 12 continues as the horizontal guide rail 94*b* along the transfer shaftway 18, and then into alignment with a guide rail 96*c* in the upper storage space 19. This horizontal rail 96*c* in the upper storage space 19 continues into the outer guide rail 96*d* in the down shaftway 16 (as viewed to the left in Fig. 1), which outer guide rail 96*d* continues into the horizontal guide rail 96*f* at the bottom of the lower horizontal shaftway 20.

This horizontal guide rail 96*f* continues into the guide rail 96*f* at the bottom of the lower storage space 21. The guide rail 94*b* in the transfer shaftway 18 continues into the inner guide rail 94*d* (as viewed in Fig. 1 to the right thereof) of the down shaftway 16.

When the car 14 is operated in the vertical up shaftway 12, it rides on the larger diameter driving gears 42 and 46 along the cog rail or racks 50 and 58, the larger diameter idler gears 44 and 48 riding on the cog rails or racks 54 and 62.

When the car 14 is operated in the upper horizontal shaftway 18, it rides on the driving gears 42 and 46 along the horizontal cog rail or rack 50*b* (Figs. 1 and 5) and a similar horizontal cog rail or rack on the other side of the shaftway 18 and which need not be shown. The idler gears 44 and 48 in this shaftway do not engage a corresponding horizontal cog rail or rack since they are not required for horizontal operation of the car.

When the car 14 is operated in the vertical down shaftway 16, it rides on the larger diameter driving gears 42 and 46 along the cog rail or rack 58*d*, the idler gears 44 and 48 riding along the cog rail or rack 58*d* and a similar cog rail or rack on the other side of the shaftway 16.

When the car 14 is operated in the lower horizontal shaftway 20, it rides on the driving gears 42 and 46 along the horizontal cog rail or rack 50*f* (Figs. 1 and 6) and a similar cog rail or rack on the other side of the shaftway.

Similarly, the idler gears 44 and 48 do not en-

gage a corresponding cog rail or rack in this horizontal shaftway 20 since it is not required.

It will be recognized that when the car transfers from the up shaftway 12 to the upper horizontal shaftway 18 and for its return to the bottom of the building through the down shaftway 16, it must negotiate a curved section of track.

The outer section 58*a* of the curved track (to the rights of Figs. 1 and 5) has a larger radius of curvature than that of the inner section 50*a* of the curved track.

In order that the car 14 can negotiate the curves when passing from the vertical to the horizontal position and vice versa, I provide the integral smaller diameter driving gears of pinions 66 and 70 and the inner smaller idler gears 68 and 72.

At the line of tangency 118 (see Fig. 5) of the vertical cog rail or rack 50 and the horizontal cog rail or rack 50*b* with the section 50*a* of the inner curved portion of the cog rail or rack, I locate this curved section (which has a smaller radius of curvature) on the inside, that is toward the car 14, of the vertical and horizontal sections (see Fig. 9). The curved sections 50*a* are preferably integral with the vertical 50 and horizontal 50*b* sections of the cog rails or racks. It will of course be understood that, while I illustrate and describe only one side of the shaftways, the cog rails or racks, transfer switches, etc., are duplicated on the other side of the shaftways.

Immediately at the point of tangency 118, teeth are omitted from the cog rail or rack 50 and are provided on the curved section 50*a* (see Fig. 9). Thus, the larger diameter driving gears or pinions 42 and 46 leave the corresponding vertical cog rails or racks 50 on which they ride in the vertical up shaftway 12, at the point of tangency 118 and the smaller diameter driving gears or pinions 66 and 70 concurrently mesh with and ride on the curved smaller radius section 50*a*.

Upon negotiating the curved portion of the track and proceeding into the horizontal shaftway 18, cog teeth are again provided at the point of tangency 118 on the horizontal cog rail or rack 50*b*.

The section 50*a* terminates at this point so that the larger diameter driving gears or pinions 42 and 46 are again in action and not the smaller diameter gears or pinions 66 and 70.

It will be recognized that the opposed curved portion 58*a* of the outer cog rail or rack 58 has the larger radius of curvature and is therefore continuous with the vertical part of this cog rail or rack which as previously pointed out, is not provided in the horizontal transfer shaftway 18 or in the upper storage space 19. In negotiating the curved section 58*a*, only the larger diameter idler gears 44 and 70 are utilized.

The operation of the larger diameter and smaller diameter driving gears and idler gears is illustrated in Fig. 5, which shows the different successive positions assumed by these gears as the car moves from the vertical up shaftway 12 into the upper horizontal shaftway 18 (positions A, B and C).

Exit from the upper horizontal shaftway 18 into the storage space 19, which is also used for transfer of the car into the vertical shaftway 16 through which it descends in the building, is blocked by the transfer switch, generally indicated by the reference character 120, and which switch normally closes this transfer shaftway 18 against entrance from left to right, as illustrated in Figs. 1 and 5, to which latter figure reference is now more particularly made.

The transfer switch 120 is pivoted just below the transfer shaftway 18 at 122 and is provided with the counterweight 124 so that it will spontaneously assume its normal position as illustrated in Fig. 5.

The switch 120 is provided with the arm 126, which has the upper straight surface whereon the cog teeth 128 are cut and the curvilinear under surface whereon the cog teeth 130 are cut.

Upon the car passing the position 14*b* (Fig. 1), the rings 88, which rings are positioned on the outside of the driving gears 42 and 46 (see Fig. 3), engage the arm 126 of the switch 120 and press the latter in a counterclockwise direction about the pivot 122 (as viewed in Fig. 5) to open the shaftway 18 and thereby permit the car 14 to pass through it.

The cog rails 50*d* are cut away at 132 (see Fig. 10) on the outside thereof to form a pocket in which the bevelled end 129 of the switch arm 126 is seated when the transfer switch 120 is opened by the passage of the car from the shaftway 18 into the storage space 19. Thus, the arm 126 bridges the space between the cog rails or racks 50*b* (in the transfer shaftway 18) and the cog rails or racks 50*c* (in the upper storage space 19).

Thus, there is provided an unobstructed continuation of the cog rails or racks from the shaftway 18 into the storage space 19 for the driving gears or pinions 42 and 46 to ride over and drive the car.

Upon the car clearing the switch 120, it automatically returns to its normal position, as by the action of the counterweight 124 or any other means, closing off the return of the car into the transfer shaftway 18. The arm 126 is held in its normal position by the arm 134 and the stop 136 and the walls of the pocket 138 at the upper part of the shaftway 18 (see Fig. 5). The curvilinear underside of the arm 126 constitutes a section of the cog rail or rack 58*d* having the larger radius of curvature similar to 58*a*, and on which the larger diameter idler gears 44 and 70 ride.

The curved section 50*d* on the inside of the pocket 132 has a smaller radius of curvature and this part of the cog rail or rack is similar to that illustrated in Fig. 9.

Thus, when the car 14 is reversed in direction, it being understood that the motor 22 is a reversible motor, the smaller diameter driving gears 66 and 70 ride on the smaller radius of curvature cog rails or racks 50*d* and the idler gears on the larger radius of curvature rack or cog rail 58*d* formed by the teeth 130.

The car 14 is thereby moved into position to descend the building in the down shaftway 16, as illustrated by the position 14*e* of Fig. 1. The different successive positions of the driving gears and idler gears in negotiating the passage from the horizontal storage space 19 into the vertical down shaftway 16 is illustrated in Fig. 5 by the positions D, E and F.

As the car 14 leaves the position 14*f* (Fig. 1) it negotiates the lower curvilinear transfer from the vertical down shaftway 16 to the lower horizontal shaftway 20. The larger diameter driving gears or pinions 42 and 46 ride on the larger radius of curvature cog rails or racks 50*f* and the smaller diameter idler gears 68 and 72 on the

smaller radius of curvature cog rails or racks **58***f*.

It will be understood that the curved cog rails or racks **50***f* and **58***f* are similar in construction to the curved cog rails or racks **50***a* and **58***a*. Referring to Fig. 6, the driving gears and idler gears are illustrated in successive positions assumed by them in negotiating the curve from the vertical to the horizontal at G and H.

Referring now to Figs. 1 and 6, and more particularly to the latter, the transfer switch, generally indicated by the reference character **140**, is normally arranged to close off movement of the car **14** from the lower storage space **21** into the transfer shaftway **20**, as illustrated in Figs. 1 and 6.

Upon passing the position **14***g* (see Fig. 1), the rings **142** on the shafts **78**, on which the idler gears are mounted, engage the under-sides of the arms **144** of the switches **140**, pressing them upwardly about the switch pivot **146** (in a counter-clockwise direction, as viewed in Figs. 1 and 6) to open entrance into the lower storage space **21**.

The underside of the arm **144** along the surface **148** engaged by the rings **142** is not cut with cog teeth since, as previously pointed out, the idler gears do not function in the horizontal shaftways.

When the car passes away from the end of the arm **144** into the storage space **21**, as indicated by the position of the car **14***h*, it (the arm **144**) returns by gravity into its normal position illustrated in Figs. 1 and 6. A pocket **150** is provided in the cog rails or racks **50***g* in which the end of the arm **144** is seated and which pocket serves as a stop to prevent further rotation of the arm **144** in a clockwise direction as viewed in Fig. 6 (see Figs. 6 and 8).

The inner surface of the arm **144** is concavedly curved and provided with the teeth **152**, which teeth are a continuation of the teeth of the cog rail or rack **50***h* and the teeth of the cog rail or rack **50**.

The inner surface of the arm **144** is of the larger radius of curvature with which the driving gears **42** and **46** mesh and ride on.

The curved portion **58***i* connecting the rail or rack **58***h* with the vertical cog rail or rack **58** is of the smaller radius of curvature and meshes with the idler gears **68** and **72** as the car negotiates the curve from the horizontal to the vertical.

It will of course be understood that the curved portion **58***i* of the cog rail or rack is similar to the construction illustrated in Fig. 9 for the section **50***a* and therefore is spaced inwardly, that is, toward the rear of the plane of the drawing, so that the arm **144** may swing in a counter-clockwise direction about the pivot **146**, as viewed in Fig. 6 and clear the cog rail or rack **58***i* and assume the position illustrated in broken lines at **152***i*.

The car **14** may thus be moved from the storage space **21** on the cog rails formed by the teeth **152** and the section **58***i* to ascend the vertical shaftway **12** and again repeat the up and down travel heretofore described.

It will now be recognized that I have provided an elevator system for a building in which any elevator car may travel in the same direction in the same shaftway thereby eliminating a bank of elevator shafts while providing the same flexibility of service.

It will be further recognized that I have provided an elevator system of this kind in which a succeeding car is prevented from running into or approaching any closer than a pre-established distance the car preceding it.

It will also be recognized that with an elevator system according to the present invention (where irreversible "worm and gear" transmission of power and the "rack and pinion" principle of motion are utilized) there is obtained a smoothness of operation independent of and not encountered in prior elevator systems in which the weight of the elevator car is counter-balanced.

It will be further recognized that I have provided an elevator system having vertical shaftways and horizontal shaftways having transfer switches so arranged and constructed that an elevator car may automatically travel from one shaftway to the other in one direction only.

While I have illustrated specific embodiments of my invention, I do not intend to be limited to the specific details shown but intend to claim my invention as broadly as the prior art and the scope of the appended claims permit.

I claim:

1. In an elevator system wherein the elevator car may be driven in an endless path, a pair of vertical shaftways connected by an upper horizontal shaftway and a lower horizontal shaftway, a driving means in the elevator car, opposed spaced cog rails in each vertical shaftway, a lower cog rail in each horizontal shaftway, a driving gear operated by the driving means and meshing with a first mentioned cog rail of said opposed cog rails in each vertical shaftway and the lower cog rail in each horizontal shaftway and an idler gear driven by the driving gear and meshing with a second mentioned cog rail of said opposed cog rails in each vertical shaftway.

2. In an elevator system having an elevator car, opposed vertical spaced cog rails for an up shaftway, a horizontal cog rail at an upper level for a transfer shaftway, a curved cog rail communicating at one end with a first vertical cog rail of said opposed cog rails and at the other end with with the horizontal cog rail, a second curved cog rail at one end with from the second vertical cog rail, said first curved cog rail of smaller radius of curvature than that of the second curved cog rail, said first curved cog rail spaced inwardly of the first vertical cog rail and the horizontal cog rail at the point of tangency with the curved cog rail and means for operating the elevator car including a driving gear meshing with the first vertical cog rail, an idler gear meshing with the second vertical cog rail, a second driving gear integrally driven by the first driving gear and of smaller diameter than the driving gear and corresponding to the radius of curvature of the first cog rail and a second idler gear integrally driven with the first idler gear and of smaller diameter than the said first idler gear and corresponding to the radius of curvature of the second curved cog rail, said second driving gear and said second idler gear being mounted inwardly of said first driving gear and said first idler gear.

3. In an elevator system having an elevator car, a pair of vertical spaced cog rails for a down shaftway, one of said vertical cog rails for mesh with a driving gear and the other of said vertical cog rails for mesh with an idler gear driven by the driving gear, a horizontal cog rail at an upper level for transfer of the elevator car to the down shaftway, a curved cog rail at one

end communicating with the horizontal cog rail and at the other end communicating with the cog rail for the driving gear, a second curved cog rail at one end communicating with the vertical cog rail for the idler gear, the radius of curvature of said first mentioned curved cog rail being smaller than the radius of curvature of said second mentioned curved cog rail, the first mentioned curved cog rail spaced inwardly of the horizontal cog rail and the vertical cog rail for the driving gear at the point of tangency therewith, a second driving gear integrally driven with the first driving gear and of smaller diameter than said first driving gear for mesh with the first curved cog rail, a second idler gear integrally driven with the first idler gear for mesh with the second curved cog rail and means for driving the elevator car including a driving gear and a second idler gear meshing therewith.

4. In an elevator system for an elevator car and having a pair of spaced vertical shaftways and a pair of spaced horizontal transfer shaftways at right angles to the vertical shaftways, means for driving the elevator car through the shaftways including a driving gear and an idler gear meshing therewith, a pair of spaced vertical cog rails in each vertical shaftway, one of said vertical cog rails for mesh with the driving gear and the other of said vertical cog rails for mesh with the idler gear, a horizontal cog rail in each horizontal shaftway and at right angles to the vertical cog rails, first mentioned curved rails at one end communicating with each vertical cog rail for the driving gear and at the other end communicating with each horizontal cog rail and a second mentioned curved cog rail at one end communicating with the vertical cog rail for the idler gear, one of said curved cog rails being of shorter radius than the other of said curved cog rails, said shorter radius curved cog rail spaced inwardly of the vertical cog rail connected thereby and the larger radius curved cog rail continuing into the vertical cog rail connected thereby.

5. In an elevator system for an elevator car, means for driving the car including a driving gear and an idler gear meshing therewith, an up shaftway, a down shaftway, a horizontal transfer shaftway at an upper level connecting said up and down shaftways, a pivoted weighted member, normally closing said horizontal shaftway and opening said down shaftway, said switch on the upper surface thereof having teeth for the car driving gear, said member being moved from normal position to horizontal position to open said horizontal shaftway and close said down shaftway upon engagement of said teeth on the upper surface by the car driving gear and movement of said car over said upper surface of the member, said member being spontaneously returnable to normal position and open the down shaftway, said down shaftway being closed upon disengagement of said driving gear with said teeth on said upper surface, said under surface of said member being curved and teeth on the said curved under surface of the switch for engagement by the idler gear.

6. In an elevator system having an elevator car, means for driving said car including a driving gear and an idler gear meshing therewith, a system of cog rails engaged by the driving gear and idler gears, a pair of vertical shaftways and a pair of connecting horizontal shaftways and weighted members having elements in alignment with cog rails of the system thereof,

said elements upon gravitation of the members normally closing the horizontal shaftways, said system of cog rails arranged in continuity in the shaftways, said members having teeth on the upper surface thereof continuing with the teeth of the cog rails, said upper surface being straight and said teeth thereon being continuous with the teeth on the aligned cog rails upon opening a horizontal shaftway, said members being curved on the undersurface thereof and having teeth on said under surface, said teeth on said under surface being continuous with the teeth on an aligned cog rail upon opening a down shaftway having an aligned cog rail whereby the car may be transferred from one shaftway to another shaftway.

7. In an elevator system wherein the elevator car may be driven in an endless path, a pair of vertical shaftways connected by an upper horizontal shaftway and a lower horizontal shaftway, and a pivoted weighted element in each horizontal shaftway, an element in said member in the path of travel of said car normally closing passage of the car through said horizontal shaftway, said member, upon movement of the car in one direction, thereby pivoted to bring said element into horizontal position to open passageway of the car through said horizontal shaftway and automatically pivotally gravitating to bring said element in up raised position to close said horizontal shaftway and prevent movement of the car in said horizontal shaftway in the opposite direction.

8. In an elevator system wherein the elevator car may be driven in an endless path, a pair of vertical shaftways connected by an upper horizontal shaftway and a lower horizontal shaftway and a member in each horizontal shaftway, said member having an element to open and close said horizontal shaftway, said member normally closing the horizontal shaftway, each element having an upper surface and a lower surface, one of said surfaces in normal position of the member engaged upon movement of the car in one direction for movement of the car through the horizontal shaftway in said direction and the other of said surfaces in normal position of the member for engagement upon movement of the car in the opposite direction to close the horizontal shaftway for movement of the car therethrough in said opposite direction.

9. In an elevator system having a third rail, an elevator car having an electric motor for driving the car, a power cut-off lever having an upper element and a lower element extending from a pivot at the center of the lever, the upper element offset horizontally from the lower element at the pivot and a switch for opening and closing a circuit to a section of the third rail below the pivot, said lower element engaged by means on the car to close the switch and said upper element engaged by said means on the car to open said switch upon movement of the car past said pivot.

ACHILLES F. ANGELICOLA.

REFERENCES CITED

The following references are of record in the file of this patent:

UNITED STATES PATENTS

Number	Name	Date
561,223	Hamilton	June 2, 1896
1,902,946	Breed	Mar. 28, 1933
1,930,219	Hunt	Oct. 10, 1933