June 16, 1959 W. C. ELMORE 2,891,178

SUPPORT FOR VIBRATORY DEVICES

Filed Aug. 19, 1957

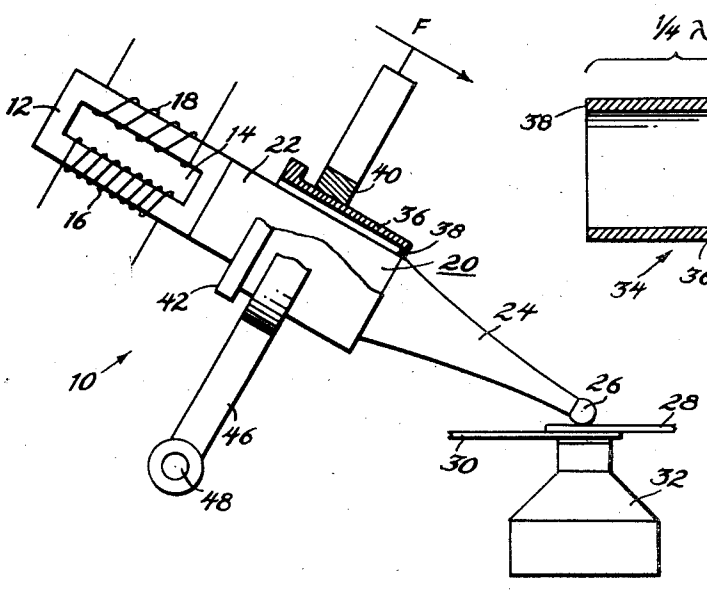

Fig. 1.

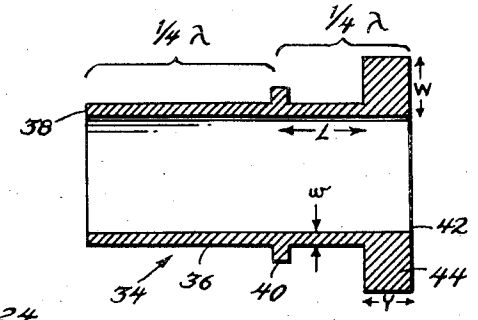

Fig. 2.

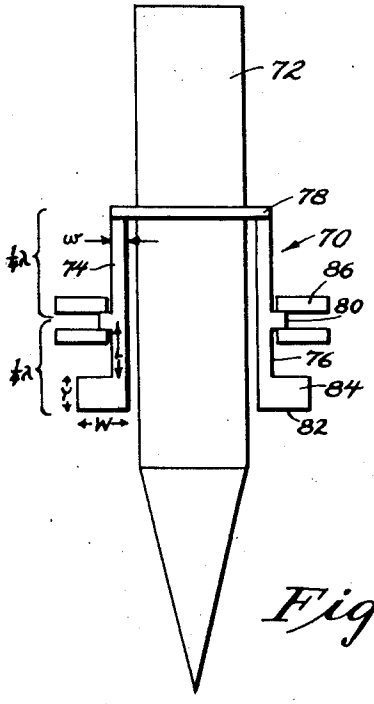

Fig. 4.

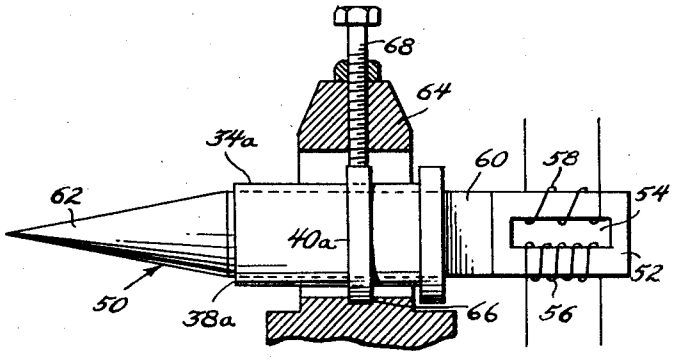

Fig. 3

INVENTOR.
WILLIAM C. ELMORE
BY Arthur H. Seidel
ATTORNEY.

United States Patent Office 2,891,178 Patented June 16, 1959

2,891,178

SUPPORT FOR VIBRATORY DEVICES

William C. Elmore, Media, Pa., assignor to Aeroprojects, Inc., West Chester, Pa., a corporation of Pennsylvania

Application August 19, 1957, Serial No. 678,942

17 Claims. (Cl. 310—26)

This invention relates to a support for vibratory devices and to vibratory devices comprising such supports; and more particularly, to a support for vibratory devices used in sonic and ultrasonic operations in which the loss of energy from the devices by absorption and the like is minimized.

Vibratory devices delivering sound energy have been widely used experimentally and industrially to perform various operations such as soldering, drilling, welding, machining, mixing, homogenizing, emulsifying, sterilizing, and the like. In general, these devices comprise a source of alternating electrical current, a transducer for converting the electrical current into mechanical oscillations and a coupler for conducting the vibratory energy developed by the transducer to a desired area. The coupler may also perform the added function of concentrating or diffusing the vibratory energy and of matching impedance between transducer and work. For operating purposes, these devices are generally supported in mounts of soft material, by rigid mechanical type mounts, on diaphragms, etc. In operation, the device is excited and the developed vibratory energy is transmitted through the device to the area being worked upon.

When the vibratory energy is being continuously transmitted by the device, part of the energy is reflected by boundaries such as interfaces, associated with changes in the speed of sound in the materials used. As a result thereof, standing wave patterns are established. When such standing wave patterns are established, certain sections of the vibratory device have zones of minimum motion, called nodes, which recur at one-half wavelength intervals. Other sections of the device have zones of maximum motion, called antinodes or loops, which also recur at one-half wavelength intervals and at a distance of one-quarter wavelength from an adjacent node. Since minimum motion of the vibratory device occurs at nodes, it has been considered desirable with prior devices to support such devices at these parts at which nodes are established to minimize energy losses by absorption.

However, a standing wave pattern exists only on an unloaded or partially loaded vibratory device. Accordingly, true nodes do not exist on a vibratory device which is delivering essentially all of its power. In a condition of perfect matching of the load to the vibratory device, which is desirable for maximum utilization of the energy developed, the standing wave patterns characteristic of an unloaded or partially loaded system are not established. Under these circumstances, all of the energy developed by the device is absorbed and none is reflected from the work face back along the device to cause standing wave patterns. Therefore, if the vibratory device is supported in inelastic or semi-elastic attachments, the transmission characteristics of the device are altered and some of the energy is absorbed.

Even when perfect matching of the load is not achieved, for example when one-half of the available energy of the vibratory device is being delivered so that standing wave patterns and nodal zones will exist in the coupler, the nodal zones will still have vibratory amplitude requisite for passage of the delivered half of the energy. If inelastic or semi-elastic attachments are made to the vibratory device, the energy delivered will be reduced still further, even if the attachments are positioned at the so-called nodal zones.

When a vibratory device has a free end, i.e. an end which is not delivering energy, a node will exist, one-quarter wavelength from the free end and at odd multiples of one-quarter wavelength when the device is longer than one-half wavelength.

I have discovered that by providing vibratory devices with a resonant member a unit multiple of one-half wavelength long according to the properties of the material of which the resonant member is made and the operating frequency, and having a free end, true standing wave patterns are set up in the resonant member, thus establishing a true node at which the devices can be supported, thereby minimizing losses by absorption of the vibratory energy developed by the device. This permits maximum energy output to the work area instead of complicating energy transmission. The support is simple and inexpensive to make and install and does not restrict the action of the apparatus. It does not require or preclude supporting the device rigidly and permits the device to be applied with force to the area being worked on, as required for drilling, welding, soldering, machining, extrusion, and other heavy-duty applications. The avoidance of energy losses by absorption analogous to leakage, permits the device of the present invention to have special utility for mixing, homogenizing, emulsifying, sterilizing and like operations.

The foregoing supports and vibratory devices including such supports comprise for the support a resonant member one-half wavelength long or unit multiples of one-half wavelength long according to the properties of the material of which the support is made and the operating frequency of the vibratory device with which the support is engaged. Such supports have a node one-quarter wavelength from the free end of the support, or odd multiples of one-quarter wavelength from the free end of the support, with the other end of the support secured to the unit being supported. Such supports and the apparatus embodiments comprising such supports and the vibratory devices engaged therewith, form the subject matter of my copending patent application Serial No. 517,599, entitled "Vibratory Device," filed June 23, 1955, of which this application is a continuation-in-part. Such supports render the vibratory device with which they are associated essentially force-insensitive regardless of the location on the vibratory device at which the support is secured, i.e. the vibratory device which is so-supported may be applied to a work area with force and under a load with a minimal loss of vibratory energy. For practical reasons, the support is generally secured to the vibratory device at an antinode or loop, which is a zone of minimum stress, or as near to an antinode or loop as possible.

Generally, the support is equivalent to one-half wavelength long, although for very long transducer-coupler arrays it may be advisable to utilize a support that is equivalent to unit multiples of one-half wavelength in length.

I have discovered that superior supports or mounts may be constructed in which the mount thickness is not uniform, and in which the wavelength properties of the mount are not linearly proportional to its length. Thus, I have found that material savings in length may be effected by thickening the mass of the mount adjacent its free end so that such mass has the characteristics of and is equivalent to one-quarter wavelength, or odd multiples of one-quarter wavelength, according to the material used

at the operating frequency of the device with which the support or mount is engaged, but has an appreciably smaller axial length and greater cross-sectional width for the equivalent of one-quarter wavelength than the portion of the mount intermediate the means for carrying the mount and the portion of such mount which is fixedly secured to the vibratory device with which the mount is engaged. The use of a thickened portion or a lumped or relatively large mass having a length equivalent to one-quarter wavelength, or odd unit multiples of one-quarter wavelength, preferably one-quarter wavelength, permits the mount to be used in locations where space is critical. For a resonant support member of generally uniform cross-sectional width and having a thickened mass adjacent to or at one free end, the relative proportions of the free end portion to the node at which the support member is carried and which has a lumped mass may be determined by applying the following equation:

$$w \cot kL = W \tan kY$$

in which the left hand side of the equation expresses the stiffness reactance and the right hand side of the equation expresses the mass reactance at resonance and in which:

w=the thickness dimension of the generally uniform cross-sectional width in centimeters;

k=the wave number or

$$\frac{2\pi f}{c}$$

where f is the resonant frequency and c is the speed of sound in the resonant member in centimeters;

L=the axial length in centimeters of the free end portion intermediate the free end and the node at which the support is carried;

W=the dimension in centimeters of the lumped mass in the free end portion; and

Y=the axial dimension of the lumped mass in the free end portion.

This invention has as an object the provision of a support for vibratory devices which permits such devices to be applied to work areas with force and under a load with a minimal loss of vibratory energy.

This invention has as another object the provision of a support for vibratory devices which occupies a relatively small volume.

This invention has as a further object the provision of novel vibratory devices.

Other objects will appear hereinafter.

For the purpose of illustrating the invention there are shown in the drawings forms which are presently preferred; it being understood, however, that this invention is not limited to the precise arrangements and instrumentalities shown.

Referring to the drawings wherein like reference characters refer to like parts;

Figure 1 is a side elevational view, partly in section, of a welder of the present invention which includes a support of the present invention.

Figure 2 is a longitudinal section through the support of the present invention which is used in the welder of Figure 1.

Figure 3 is a side sectional view of another embodiment of the present invention showing a supported device constructed and arranged for a machining operation, in which the support comprises the support of Figure 2.

Figure 4 is an elevational view of another device of the present invention utilizing another embodiment of the support of the present invention.

Referring to the drawings and initially to Figures 1 and 2 there is shown therein a welder designated generally by **10**. The welder **10** is of the type described in the following patent applications: Serial No. 467,382, filed November 8, 1954, entitled "Method and Apparatus Employing Vibratory Energy for Bonding Materials," in the name of

James Byron Jones, Carmine F. De Prisco, and myself, now abandoned; and its copending continuation-in-part applications: Serial No. 579,780, filed April 23, 1956, entitled "Method and Apparatus Employing Vibratory Energy for Bonding Metals," in the name of James Byron Jones, Carmine F. De Prisco, and myself; Serial No. 579,779, filed April 23, 1956, entitled "Vibratory Seam Welder and Vibratory Seam Welding Process," in the name of James Byron Jones, Carmine F. De Prisco, and myself; or it may be of the type described in Serial No. 610,991, filed September 5, 1956, entitled "Method and Apparatus Employing Vibratory Energy for Bonding Metals," in the name of James Byron Jones, Carmine F. De Prisco, and myself. The illustrated embodiment may be used as a spot welder, or as a seam welder generally resembling the seam welders of the type disclosed in the last-named patent application.

The disclosures of the aforesaid patent applications are to be construed as incorporated herein by reference.

The welder **10** includes a magnetrostrictive transducer **12** comprising a laminated core of nickel, nickel-iron alloy, Permendur (an iron-cobalt alloy), or an aluminum-iron alloy, or other magneto-strictive material, properly dimensioned to insure axial resonance with the frequency of the alternating current applied thereto so as to cause it to change length periodically according to its coefficient of magnetostriction. Transducer **12** includes a rectangularly shaped opening **14** at its central portion. The elements of a polarizing coil **16** and an excitation coil **18** may be wound through the opening **14** within transducer **12**. The desirability of magnetically polarizing transducer **12** by means of polarizing coil **16** in order for the metal laminations in transducer **12** to efficiently convert the applied R.F. energy from excitation coil **18** into vibratory energy will be readily understood by one skilled in the art.

In place of transducer **12**, other forms of transducing means for producing elastic vibratory energy may be used, such as a transducer stack of laminated strips of metal, associated with a permanent magnet and a source of applied R.F. energy.

The sonotrode **20** or coupling member or jaw member comprises a cylindrical rod portion **22** metal-to-metal bonded in end-to-end contact with transducer **12** and a tapered portion **24** whose taper may, but need not necessarily, satisfy the equation set forth at page 163 of Piezoelectric Crystals and Ultrasonics, by Warren P. Mason, published in 1950 by Van Nostrand Company, namely a curved coupling member whose taper is an exponential function of the length and satisfies the relation:

$$S = S_0 e^{-2Tl}$$

where S equals the original area, S_0 equals the reduced area, T equals the taper constant, and 1 equals the length of tapered section, and a tip **26** which comprises an enlarged bulb having a curved periphery. The total length of the sonotrode **20** should be an integral number of one-half wavelengths of the transducer's frequency so that the joint between the transducer **12** and the sonotrode **20** will come at a loop of the wave motion and will not be appreciably strained.

The workpieces **28** and **30** undergoing welding may comprise strips of foil or sheet metal which are supported upon anvil **32**.

The support for welder **10** comprises the support of the present invention and is designated **34**. In the embodiment illustrated in Figures 1 and 2 the support **34** comprises a cylindrical metal shell **36**, such as a shell of stainless steel or the like, secured to the cylindrical portion **22** of sonotrode **20** at attachment point **38**. For practical reasons, attachment point **38** generally comprises an antinode or loop on the sonotrode **20**, which is a zone of minimum stress.

The shell **36** is generally of uniform wall thickness (w) except for the portion **44**. The relative thickness and linear dimensioning of the various parts of shell **36** will be discussed in detail below.

In the illustrated embodiment, the total length of the shell **36** is equivalent to one-half wavelength according to the material of which the shell **36** is formed at the applied frequency of welder **10**. Where it is desired that the length of the support be minimal, it is advantageous to have the total length of the support equivalent to one-half wavelength, and such length is the preferred embodiment of the present invention. However, it is to be understood that the support may have a length equivalent to a plurality of unit multiples of one-half wavelength, such as a length equal to one wavelength or one and one-half wavelengths.

A flange **40** at which support **34** may be carried is positioned at the node one-quarter wavelength from the free end **42** of shell **36**. The thickness of flange **40** is not critical, although increasing the thickness of flange **40** lowers the high Q nature of the system as would be evident to one skilled in this art. As a general rule, the thickness of flange **40** should be the minimum consonant with securing desired strength characteristics.

Unlike the embodiment shown in patent application Serial No. 517,599 in which a uniformly thick support one-half wavelength long the flange is linearly positioned midway between its ends, it is to be noted that the flange **40** is axially closer to the free end **42** than it is to the end **38** which is attached to the cylindrical portion **22** of sonotrode **20**, although both portions of the support on either side of flange **40** are equivalent to one-quarter wavelength. The relative shortness of the portion of the support intermediate flange **40** and free end **42** is due to the radial mass **44** which comprises a lump or thickened portion extending radially outwardly. The dimensions of the radial mass **44** are controlled in order that the positioning of flange **40** one-quarter wavelength from free end **42** may be effected.

The thickness of the uniform contour portion of the support (w) should be less than one-twelfth of the wavelength of the frequency of operation of the welder **10** which dimension is, of course, dependent upon the material of which shell **36** is formed, although this thickness is not critical. Thus, extending the thickness of w to less than one-quarter wavelength, as for example one-eighth wavelength causes a minor reduction in efficiency of the support. The thickness should not be so great as to render the support too stiff to be properly elastic. The mean diameter of the support, if it is of the shell or tube type, should be chosen to preclude radial resonance of the tube at or close to the operating frequency of the system, as energy losses can become significant if the tubular-type support vibrates in any mode other than in the direction of the axis of the device. Radial resonance calculations can readily be made by persons skilled in the art.

I will illustrate the calculation for ascertaining the dimensions of a support comprising stainless steel engaged with a vibratory device having an operating frequency of 20,000 cycles whereby the support has a designed resonant frequency of 20,000 cycles. It is, of course, to be understood that other supports for vibratory devices utilizing other operating frequencies may be dimensioned in accordance with the same principles, and that a wide variety of elastic metals other than stainless steel may be utilized for the support of the present invention, such as brass, aluminum, Monel, titanium, steel, etc.

For the support of the present invention at resonance the active mechanical impedance on either side of a node (the flange **40** being, as heretofore noted, positioned at a node), must be equal. Thus, at resonance, the stiffness reactance must equal the mass reactance, or stated mathematically in terms of the symbols used to indicate dimensions on Figure 2:

$$w \cot kL = W \tan kY$$

where: w equals the thickness in centimeters of the uniform contour portion of the shell; W equals the radial thickness in centimeters of the radial mass **44**; Y equals the axial dimension in centimeters of the radial mass **44**; L equals the axial length in centimeters from the center of the node at which the flange **40** must be positioned to the inner part of radial mass **44**; and k is a constant for the system equal to the wave number which is equal to the wave angular velocity expressed in radians divided by the wave velocity in the material of which the support is made. The wave angular velocity is equal to: 2π times the frequency, and the wave velocity c varies for different materials. For stainless steel, the velocity of sound is 5.1×10^5 centimeters per second. Accordingly, for a shell having a uniform thickness of three one-hundredths of an inch or 0.076 centimeter, a quarter wavelength will be equal to about 2.51 inches. This can be readily determined by the equation:

$$\frac{\lambda}{4}=\frac{c}{4f}$$

wherein for stainless steel:

$$\frac{\lambda}{4}\text{ cycles}=\frac{5.1\times10^5\text{ cm./sec.}}{4\times20\times10^3\text{ cycles/sec.}}$$

$$\frac{\lambda}{4}=6.38\text{ cm.}=2.51\text{ inches}$$

Where in the illustrated embodiment W and Y both equal 0.1565 inch or 0.398 centimeter, and w equals 0.030 inch or 0.076 centimeter, the length L from the free end to the node occupied by flange **40**, namely one-quarter wavelength, will be 1.925 inches. The length between the node and the attached end **38** will be 2.51 inches since this portion of the shell **36** has a uniform thickness equal to w or 0.030 inch. Alternatively, the length between the node and the attachment point **38** may be equal to three-quarters wavelength, or in the illustrated embodiment to 7.53 inches; or one and one-quarter wavelengths or in the illustrated embodiment to 12.55 inches. Similar calculations may be made for supports having other configurations, it being essential in all instances that the distance between the free end and the flange at which the support is carried be equivalent to an odd number of one-quarter wavelengths, preferably one-quarter wavelength for the material used at its applied frequency.

In the illustrated embodiment the flange **40** is brazed or welded or otherwise fixedly secured within an annulus in a member **46** which is pivoted about pivot **48**. Force may be applied to the workpieces **28** and **30** undergoing welding at the upper end of member **46** wherein an arrow surmounted by "F" is illustrated in Figure 1. Notwithstanding the loading of the system in the manner indicated, the support **34** will remain force insensitive since the node for such support will always be positioned at flange **40**. This permits welding to be achieved notwithstanding the use of relatively high clamping pressures, and permits relatively large amounts of elastic vibratory energy to be transmitted to the workpieces **28** and **30** from the sonotrode **20**. Since the support of the present invention permits welding to be achieved over a wide variety of clamping pressures it is of great utility with welding units. Welding may be achieved with clamping pressures which need not produce an external deformation* of more than about 10% in weldments effected at room or ambient temperatures. In many cases the extent of deformation is appreciably below 10% and in some instances may be virtually absent altogether. The mini-

* By deformation is meant the change in dimensions of the weldment adjacent the weld zone divided by the aggregate thickness of the weldment members prior to welding; result multiplied by 100 to obtain percentage.

mal clamping pressure to be used constitutes a pressure sufficient to maintain the metals being welded in operative disposition, e.g. contacting each other so that the weld may be effected by the application of vibratory energy.

In the embodiment of the present invention shown in Figure 3 the support **34***a*, which in all respects is similar to the support **34** of Figures 1 and 2, is used to support a tool bit designated generally as **50**. Tool bit **50** includes a magnetostrictive transducer **52**, which generally resembles magnetostrictive transducer **12**, being provided with a central rectangular opening **54**, a polarizing coil **56**, and an excitation coil **58**. The tool bit **50** includes a cylindrical coupler **60** joined in end-to-end contact by a metal-to-metal bond to magnetostrictive transducer **52**, the coupler **60** being engaged with the support **34***a* at the attachment point **38***a*, which is preferably an antinode or loop on the support **34***a*, in a manner analogous to that in which the cylindrical portion **22** of sonotrode **20** is engaged with support **34** at attachment point **38**. A tapered cutting portion **62** is fixedly secured in end-to-end contact with coupler **60**. The tool bit **50** is carried within a tool post **64** having an arcuately shaped slot **66** in its base for receiving the flange **40***a* of support device **34***a*. Tool post **64** is provided with a clamping bolt **68** which engages flange **40***a* at a point opposite from the engagement of flange **40***a* with slot **66**.

The tool bit **64** of the present invention may be used to effect the wedging removal of metal, as for example the wedging removal of the peripheral portion of a bar of metal which is rotated between centers, as between the live and dead centers of a lathe. The use of the support may thus be used to achieve ultrasonic machining wherein in addition to the wedging removal of metal by the tool bit, the tool bit is rapidly vibrated as for example at a frequency of in excess of 10,000 cycles per second. An excellent embodiment of an ultrasonic machining process is disclosed in copending patent application Serial No. 565,853 in the name of James B. Jones, Carmine F. De Prisco, Kenneth H. Yocum, Daniel W. Timmerman, and myself entitled: "Ultrasonic Machining Process and Apparatus."

In the embodiment of the present invention shown in Figure 4, the support **70** for the vibrating element **72** (which may be of the type comprising the sonotrode of Figure 1 or the tool bit of Figure 3 or other vibrating elements, and which may have a magnetostrictive transducer or other means (not shown) for vibrating such element joined thereto) comprises a pair of resonant rods **74** and **76** joined together and to the vibrating element **72** by means of annular flange **78**. Flange **78** is fixedly secured as by brazing or the like to vibrating element **72** at an antinode or loop on said vibrating element.

The rods **74** and **76** are diametrically opposed, parallel to, and spaced from the vibrating element **72**. For example, the rods **74** and **76** may be spaced from vibrating element **72** a distance equal to about one-sixteenth of an inch, although parallelism is not critical.

In the illustrated embodiment, each of the rods has a length equivalent to one-half wavelength for the material of which the rods are made at the operating frequency of vibrating element **72**. However, it is to be understood that each of the rods may have a length equivalent to unit multiples of one-half wavelength. The rods **74** and **76** are of generally uniform cross-sectional width (w), which as heretofore indicated should not be more than one-twelfth wavelength where maximum efficiency is desired, but which may be up to one-eighth wavelength or slightly more without appreciable reduction in efficiency, except for the radial mass **84** which will be described below.

A flange **80**, whose thickness is governed by the same considerations governing the thickness of flange **40**, is provided on each of rods **74** and **76** a distance equivalent to one-quarter wavelength from the free end **82** thereof, such flange **80** being positioned at the node on the rods **74** and **76**. The portion of the rods **74** and **76** intermediate flange **80** and the free end **82** of the rods comprises a radial mass **84** disposed adjacent the free end **82**. The radial mass **84** is such that the portion of the rods intermediate flange **80** and free end **82** has a length equivalent to one-quarter wavelength for the material of which the rods are made at the applied frequency, although as will be noted from Figure 4, the linear length of this portion is appreciably less than the linear length intermediate flange **78** and flange **80**. The requisite size of the radial mass **84** necessitated to achieve a one-quarter wavelength dimension for the portion of the rods intermediate flange **78** and mass **84** may be determined by the identical calculation as was made to determine the relative size of such mass for the embodiment of the present invention shown in Figures 1 and 2, the elements of the requisite equation being illustrated at the left side of Figure 4.

The flange **80** on each of the rods **74** and **76** may be grasped or engaged by any suitable attaching means such as clamps **86**.

The mount of the present invention may be used on any one of a large variety of vibratory devices including vibratory devices which are driven not only by magnetostrictive tranducers, but also vibratory devices which are driven by other types of transducers such as barium titanate, quartz, and the like.

The present invention may be embodied in other specific forms without departing from the spirit or essential attributes thereof and, accordingly, reference should be made to the appended claims, rather than to the foregoing specification as indicating the scope of the invention.

I claim:

1. A support for a vibratory device comprising a source of mechanical vibrations and a coupler, said support comprising a resonant member having a length equivalent to an even multiple of one-quarter wavelength for the material of which the resonant member is made at the frequency of operation of the vibratory device, one end of said member having means for fixedly securing the support to the vibratory device, the other end of said member being constructed and arranged to be retained free from attachment from the vibratory device, means positioned at an odd multiple of the equivalent of one-quarter wavelength of the frequency of operation of the vibratory device for the material of which the resonant member is made from the free end of said member for carrying the support, the portion of said member intermediate said last-mentioned means and the free end of said member being of shorter axial length for the equivalent of one-quarter wavelength than the portion of said member intermediate said last-mentioned means and the end of said member having means for fixedly securing the support to the vibratory device.

2. A support in accordance with claim 1 in which the resonant member is a cylindrical shell, said shell having a radially inwardly directed flange as the means for fixedly securing the support to a vibratory device.

3. A support in accordance with claim 1 in which the portion of the support intermediate the means for carrying the support and the end of the support having means for fixedly securing the support to a vibratory device is of substantially uniform cross-sectional thickness, and the portion of the support intermediate the means for carrying the support and the free end is of irregular contour comprising a thickened portion and has an axial length in centimeters between the center of the support and the inner part of the thickened portion which length is designated L and is substantially in conformity with the equation:

$$w \cot kL = W \tan kY$$

where:

w equals the thickness dimension of the substantially uniform contour portion of the support in centimeters;

W equals the thickness of the thickened portion in centimeters;

k equals 2π times the frequency of the sound wave at resonance for the material of which the resonant member is formed divided by the velocity of the sound wave in the material of which the resonant member is formed in centimeters; and

Y equals the axial dimension of the thickened portion in centimeters.

4. A support in accordance with claim 3 in which w is less than one-twelfth wavelength of the applied frequency of operation soundwave.

5. A support for a vibratory device comprising a source of mechanical vibrations and a coupler, said support comprising a resonant member having a length equivalent to an even multiple of one-quarter wavelength for the material of which the resonant member is made at the frequency of operation of the vibratory device, one end of said member having means for fixedly securing the support to the vibratory device, the other end of said member being constructed and arranged to be retained free from attachment from the vibratory device, means positioned at an odd multiple of the equivalent of one-quarter wavelength of the frequency of operation of the vibratory device for the material of which the resonant member is made from the free end of said member for carrying the support, the portion of said member intermediate said last-mentioned means and the free end of said member comprising a thickened portion of irregular contour and of shorter axial length for the equivalent of one-quarter wavelength than the portion of said member intermediate said last-mentioned means and the end of said member having means for fixedly securing the support to the vibratory device, said portion of said member intermediate said last-mentioned means and the end of said member having means for fixedly securing the support to the vibratory device being of regular contour.

6. A support for a vibratory device comprising a source of mechanical vibrations and a coupler, said support comprising a resonant member having a length equivalent to an even multiple of one-quarter wavelength for the material of which the resonant member is made at the frequency of operation of the vibratory device, one end of said member having means for fixedly securing the support to the vibratory device, the other end of said member being constructed and arranged to be retained free from attachment from the vibratory device, means positioned at the equivalent of one-quarter wavelength of the frequency of operation of the vibratory device for the material of which the resonant member is made from the free end of said member for carrying the support, the portion of said member intermediate said last-mentioned means and the free end of said member being of shorter axial length for the equivalent of one-quarter wavelength than the portion of said member intermediate said last-mentioned means and the end of said member having means for fixedly securing the suport to the vibratory device.

7. A support for a vibratory device comprising a source of mechanical vibrations and a coupler, said support comprising a resonant member having a length equivalent to a one-half wavelength for the material of which the resonant member is made at the frequency of operation of the vibratory device, one end of said member having means for fixedly securing the support to the vibratory device, the other end of said member being constructed and arranged to be retained free from attachment from the vibratory device, means positioned at the equivalent of one-quarter wavelength of the frequency of operation of the vibratory device for the material of which the resonant member is made from the free end of said member for carrying the support, the portion of said member intermediate said last-mentioned means and the free end of said member being of shorter axial length for the equivalent of one-quarter wavelength than the portion of said member intermediate said last-mentioned means and the end of said member having means for fixedly securing the support to the vibratory device, said last-mentioned portion being of regular contour and having a thickness of less than one-twelfth wavelength of the frequency of operation of the vibratory device for the material of which the resonant member is made.

8. A support for a vibratory device comprising a source of mechanical vibrations and a coupler, said support comprising a pair of resonant members, each resonant member having a length equivalent to an even multiple of one-quarter wavelength for the material of which the resonant members are made at the frequency of operation of the vibratory device, one end of each of said members having means for fixedly securing the support to the vibratory device, said means comprising a flange engaged with said vibratory device and said member and retaining said member in spaced disposition from said vibratory device, the other end of each of said members being constructed and arranged to be retained free from attachment from the vibratory device, means positioned on each member at an odd multiple of the equivalent of one-quarter wavelength of the frequency of operation of the vibratory device for the material of which the resonant member is made from the free end of said member for carrying the support, the portion of said member intermediate said last-mentioned means and the free end of said member being of shorter axial length for the equivalent of one-quarter wavelength than the portion of said member intermediate said last-mentioned means and the end of said member having means for fixedly securing the support to the vibratory device, said last-mentioned portion being of regular contour and having a thickness of less than one-twelfth wavelength of the frequency of operation of the vibratory device for the material of which the resonant member is made.

9. Apparatus including in combination a vibratory device comprising a source of mechanical vibrations and a coupler, and a support for said vibratory device secured to said coupler, said support comprising a resonant member having a length equivalent to an even multiple of one-quarter wavelength for the material of which the resonant member is made at the frequency of operation of said vibratory device, one end of said member having means for fixedly securing said support to said vibratory device, the other end of said member being constructed and arranged to be retained free from attachment from said vibratory device, means positioned at an odd multiple of the equivalent of one-quarter wavelength for the material of which said resonant member is made at the frequency of operation of said vibratory device from the free end of said member for carrying the support, the portion of said member intermediate said last-mentioned means and the free end of said member being of shorter axial length for the equivalent of one-quarter wavelength than the portion of said member intermediate said last-mentioned means and the end of said member having means for fixedly securing the support to said vibratory device.

10. Apparatus in accordance with claim 9 in which the resonant member is a cylindrical shell, said shell having a radially inwardly directed flange as the means for fixedly securing the support to the vibratory device.

11. Apparatus in accordance with claim 9 in which the support is secured to the coupler at an antinode on the coupler.

12. Apparatus in accordance with claim 9 in which the portion of the support intermediate the means for carrying the support and the end of the support having means for fixedly securing the support to the vibratory device is of substantially uniform cross-sectional thickness, and the portion of the support intermediate the means for carrying the support and the free end is of irregular contour comprising a thickened portion and has an axial length in centimeters between the center of the support and the inner part of the thickened portion, which length

is designated L and is substantially in conformity with the equation:

$$w \cot kL = W \tan kY$$

where:

w equals the average thickness dimension of the substantially uniform contour portion of the support in centimeters;

W equals the average radial thickness of the thickened portion in centimeters;

k equals 2π times the frequency of the sound wave at resonance for the material of which the resonant member is formed divided by the velocity of the sound wave in the material of which the resonant member is formed in centimeters; and

Y is equal to the average axial dimension of the thickened portion in centimeters.

13. Apparatus in accordance with claim 9 in which w is less than one-twelfth wavelength of the frequency of operation of the vibratory device.

14. Apparatus including in combination a vibratory device comprising a source of mechanical vibrations and a coupler, and a support for said device secured to said coupler at an antinode on said coupler, said support comprising a resonant member having a length equivalent to an even multiple of one-quarter wavelengths for the material of which the resonant member is made at the frequency of operation of the vibratory device, one end of said member having means for fixedly securing the support of said vibratory device, the other end of said member being constructed and arranged free from attachment from said vibratory device, means positioned at an odd multiple of the equivalent of one-quarter wavelength for the material of which the resonant member is made at the frequency of operation of said vibratory device from the free end of said member for carrying the support, the portion of said member intermediate said last-mentioned means and the free end of said member being of irregular contour comprising a thickened portion and of shorter axial length for the equivalent of one-quarter wavelength than the portion of said member intermediate said last-mentioned means and the end of said member having means for fixedly securing the support to said vibratory device, said last-mentioned portion being of regular contour, and having a thickness less than one-twelfth wavelength of the frequency of operation of the vibratory device.

15. Apparatus including in combination a vibratory device comprising a source of mechanical vibrations and a coupler, and a support for said device secured to said coupler at an antinode on said coupler, said support comprising a resonant member having a length equivalent to an even multiple of one-quarter wavelengths for the material of which the resonant member is made at the frequency of operation of the vibratory device, one end of said member having means for fixedly securing said support to said vibratory device, the other end of said member being constructed and arranged to be retained free from attachment from the vibratory device, means positioned at the equivalent of one-quarter wavelength for the material of which the resonant member is made at the frequency of operation of the vibratory device from the free end of said member for carrying the support, the portion of said member intermediate said last-mentioned means and the free end of said member being of shorter axial length for the equivalent of one-quarter wavelength than the portion of said member intermediate said last-mentioned means and the end of said member having means for fixedly securing the support to said vibratory device, said last-mentioned portion having a thickness less than one-twelfth wavelength of the frequency of operation of the vibratory device for the material of which the resonant member is made.

16. Apparatus including in combination a vibratory device comprising a source of mechanical vibrations and a coupler, and a support for said device secured to said coupler at an antinode on said coupler, said support comprising a resonant member having a length equivalent to a one-half wavelength for the material of which the resonant member is made at the frequency of operation of said vibratory device, one end of said member having means for fixedly securing the support to said vibratory device, the other end of said member being constructed and arranged to be retained free from attachment from said vibratory device, means positioned at the equivalent of one-quarter wavelength for the material of which the resonant member is made at the frequency of operation of the vibratory device from the free end of said member for carrying said support, the portion of said member intermediate said last-mentioned means and the free end of said member being of shorter axial length for the equivalent of one-quarter wavelength than the portion of said member intermediate said last-mentioned means and the end of said member having means for fixedly securing said support to said vibratory device, said last-mentioned portion being of regular contour and having a thickness of less than one-twelfth wavelength of the frequency of operation of the vibratory device for the material of which the resonant member is made.

17. Apparatus including in combination a vibratory device comprising a source of mechanical vibrations and a coupler, and a support for said device secured to said coupler at an antinode on said coupler, said support comprising a pair of resonant members, each member having a length equivalent to an even multiple of one-quarter wavelength for the material of which the resonant member is made at the frequency of operation of said vibratory device, one end of each of said members having means for fixedly securing the support to said vibratory device, said means comprising a flange engaged with said vibratory device and retaining said member in spaced disposition from said vibratory device, the other end of each of said members being constructed and arranged to be retained free from attachment from said vibratory device, means on each of said members positioned at an odd multiple of the equivalent of one-quarter wavelength for the material of which the resonant member is made at the frequency of operation of the vibratory device from the free end of said member for carrying said support, the portion of said member intermediate said last-mentioned means and the free end of said member being of shorter axial length for the equivalent of one-quarter wavelength than the portion of said member intermediate said last-mentioned means and the end of said member having means for fixedly securing said support to said vibratory device, said last-mentioned portion being of regular contour and having a thickness of less than one-twelfth wavelength of the frequency of operation of the vibratory device for the material of which the resonant member is made.

No references cited.