A. P. LADD.

THILL-COUPLINGS.

No. 193,664. Patented July 31, 1877.

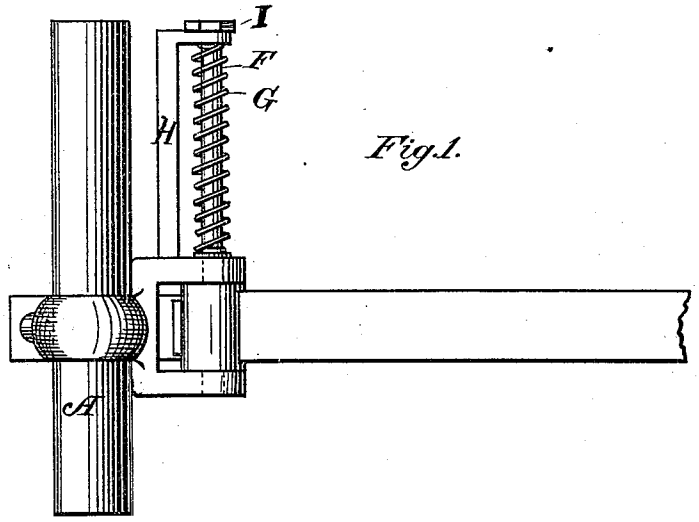


Fig. 1.

Fig. 2

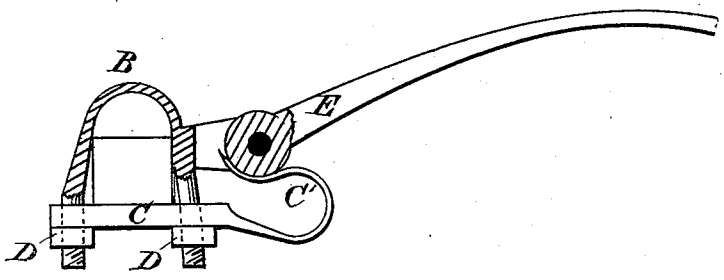


Attest:
F. H. Schott.
D. P. Cook

Inventor
Alex. P. Ladd
By Daniel Breed Atty.

N. PETERS, PHOTO-LITHOGRAPHER, WASHINGTON, D. C.

# UNITED STATES PATENT OFFICE.

ALEXANDER P. LADD, OF ST. LAWRENCE, NEW YORK.

## IMPROVEMENT IN THILL-COUPLINGS.

Specification forming part of Letters Patent No. **193,664**, dated July 31, 1877; application filed May 17, 1877.

*To all whom it may concern:*

Be it known that I, ALEX. P. LADD, of St. Lawrence, in the county of Jefferson and State of New York, have invented certain new and useful Improvements in Thill-Couplings; and I do hereby declare that the following is a full, clear, and exact description thereof, which will enable others skilled in the art to which it appertains to make and use the same, reference being had to the accompanying drawings, and to the letters of reference marked thereon, which form a part of this specification.

My invention consists of a spiral spring, in combination with the coupling-bolt of a thill-coupling; and also in a novel form and arrangement of a plate-spring, in combination with the clip-cap and thill-coupling, which will be fully explained in the following description.

In the accompanying drawings, Figure 1 is a top view of my improvement applied to a thill-coupling. Fig. 2 is a side view, partly in section.

In the drawings are shown the axle of a buggy at A, with the clip B thereon, and the thill E, all of which may be of the usual general form.

The coupling-bolt F is made longer than usual, and supported by a rod or bar, H, attached to the clip, as seen in Fig. 1. Around the bolt F is a coiled spring, G, pressing against a shoulder on the bolt, which is thus held in place, so that no jar or knock could uncouple the thill; but by seizing hold of the nut on the end of bolt F the latter may be drawn out of the thill, which is thus released in a moment, and may in like manner be replaced.

This improvement may be easily applied to old buggies or the ordinary clips by simply making a screw-hole in the ear of the clip for inserting the rod H, and the use of a long bolt, as described.

Another feature of my improvement is the spring screw clip-cap C C′, which is folded back under the end of the thill, so as to support the same, and also to prevent the rattling and wear on the coupling-bolt. This is an advantage over other similar springs where the weight of the thill rides and wears on the bolt.

By the above-described arrangement it is very easy to couple or uncouple the thills, which, being laid in place upon the springs C′, will rest thereon, while both hands of the operator are free to insert the coupling-bolt F in coupling the thills, or to remove the bolt in uncoupling the same. This is a great advantage over springs which do not form a rest for the thills.

It may be added that the spring C′ need not necessarily be made in the same piece with the clip-cap C, though I prefer this construction.

I do not broadly claim the use of a coiled spring in combination with a coupling-bolt of a thill-coupling, but limit my claim to the special construction and arrangement above described. And I may mention that the bolt F has the nut or cap I fastened in place by riveting, so that no jar can loosen the nut, and the rod H cannot be loosened by jarring.

Having thus described my invention, what I claim is—

1. The coupling-bolt F, surrounded by the spring G and supported by the arm H, substantially as set forth.

2. The plate-spring C′, extending forward from the clip-cap C, and then folding back under the thill, so as to support the latter, substantially in the manner and for the purposes set forth.

In testimony that I claim the foregoing as my own I affix my signature in presence of two witnesses.

ALEX. P. LADD.

Witnesses:
DANIEL BREED,
THOMAS C. CONNOLLY.