Snofford & Raffington,

Spring Gun,

No. 82,561, Patented Sep. 29, 1868.

Fig: 1.

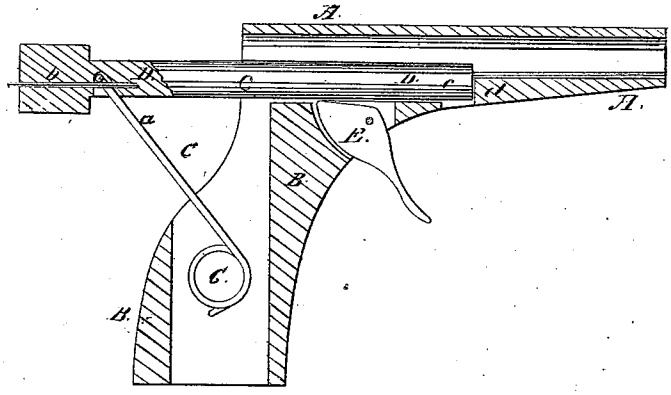

Fig: 2

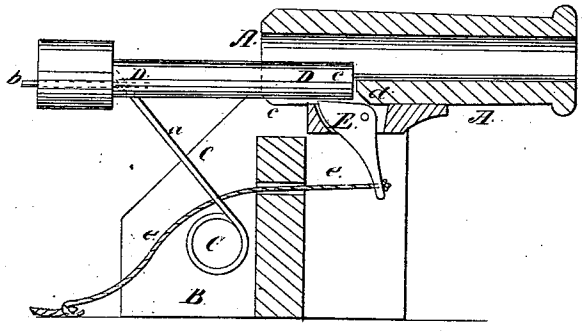

Witnesses:
Wm A. Morgan
G. C. Sutton

Inventors:
F. A. Snofford
W. G. Raffington
per Munn & Co
attorneys

N. PETERS, PHOTO-LITHOGRAPHER, WASHINGTON, D. C.

United States Patent Office.

FISHER A. SPOFFORD AND MATTHEW G. RAFFINGTON, OF COLUMBUS, OHIO.

Letters Patent No. 82,561, *dated September* 29, 1868.

TOY-GUN.

The Schedule referred to in these Letters Patent and making part of the same.

TO ALL WHOM IT MAY CONCERN:

Be it known that we, FISHER A. SPOFFORD and MATTHEW G. RAFFINGTON, of Columbus, in the county of Franklin, and State of Ohio, have invented a new and useful Improvement in Toy-Guns; and we do hereby declare that the following is a full, clear, and exact description thereof, which will enable those skilled in the art to make and use the same, reference being had to the accompanying drawings, forming a part of this specification.

Figure 1 represents a longitudinal section of our improved toy-pistol.

Figure 2 is a longitudinal section of our improved cannon.

Similar letters of reference indicate corresponding parts.

The object of this invention is to so construct a toy-gun that it can be readily discharged, even when provided with a strong spring.

The invention consists in the formation of a downward enlargement of the barrel, near the breech-end of the same, into which enlargement the front part of the plunger is fitted, when the piece is cocked. The trigger has then only to raise the plunger out of the enlargement, and to bring it in line with the bore of the barrel, thereby exposing it to the full action of the spring.

The power of the spring does, in these improved toy-guns, not act against the trigger nor strain the trigger-pivot, and the piece is easier discharged than it could be if the plunger would by the spring be forced against the trigger.

A, in the drawing, represents the barrel of our improved toy-pistol. It is made of wood, metal, or any other suitable material, of suitable size and form, and is attached to a handle, B, as shown.

In the handle is secured a coil or other spring C, which has an extension, *a*, reaching towards and into a recess formed in the back end of a plunger, D, said plunger being fitted into the barrel, as shown.

The extension, *a*, of the spring C is, by means of a pin, *b*, pivoted to the plunger, as shown.

The bore of the barrel has a downward enlargement or chamber, *c*, near the breech-end, into which enlargement or chamber the front part of the plunger can be fitted, as in fig. 1, when the piece is to be cocked previous to its being discharged. The front end of the plunger is then, by the spring C, forced against the shoulder *d* formed at the front end of the chamber *c*.

E is a trigger pivoted to the lower part of the barrel, so as to be under the plunger, when the same is in the chamber *c*. By pulling the trigger, the plunger will be raised into the main bore of the barrel, so as to be released from the shoulder *d*, and will then be forced forward by the spring to discharge the missile.

The recess *c* is not very deep, so that when the plunger is cocked, as in the drawing, it will still project above the shoulder *d* to form an abutment for the arrow, ball, bolt, or other article to be propelled.

Instead of making this toy-gun in shape of a pistol, it may be made in shape of a cannon, as in fig. 2, or in shape of a musket or rifle. In either case, the construction of parts is substantially as described for the pistol.

The cannon may have a string, *e*, secured to the trigger, to facilitate the discharging.

Having thus described our invention, what we claim as new, and desire to secure by Letters Patent, is—

Providing the barrel of a toy-gun with a downward extension or chamber, *c*, for the reception of the plunger, as described, the trigger raising the plunger out of such chamber, substantially as set forth.

FISHER A. SPOFFORD,
MATTHEW G. RAFFINGTON

Witnesses for FISHER A. SPOFFORD:
FRANK BLOCKLEY,
ALEX. F. ROBERTS.

Witnesses for MATTHEW G. RAFFINGTON:
GEO. W. MEEKER,
R. HUTCHESON.