United States Patent [19]

Offerman et al.

[11] **3,735,330**

[45] **May 22, 1973**

[54] **KINESCOPE ANODE CONNECTOR**

[75] Inventors: **Seymour Offerman**, New York, N.Y.; **Robert B. Pittman**, River Edge, N.J.

[73] Assignee: **Industrial Electronic Hardware Corp.**, New York, N.Y.

[22] Filed: **Oct. 22, 1971**

[21] Appl. No.: **191,608**

[52] **U.S. Cl.** .....**339/91 R**, 339/244 R, 339/258 TC

[51] **Int. Cl.** **H01r 13/54**

[58] **Field of Search** .....339/17 C, 91, 244, 339/258 TC

[56] **References Cited**

UNITED STATES PATENTS

3,341,806	9/1967	Joachim	339/17 C
3,258,732	6/1966	Martin	339/258 TC
3,267,412	8/1966	Rosenberg et al.	339/258 TC

Primary Examiner—Joseph H. McGlynn

Attorney—Maxwell James et al.

[57] **ABSTRACT**

A connector has a body with a means for receiving a wire. Operatively connected to the body is a means for disposing the wire adjacent a receptacle and a means for resiliently urging the wire into a direct engagement with the receptacle without using any intervening conducting elements. The body can be made in two sections, and the disposing and bias means can be lugs integrally formed with one of the sections.

22 Claims, 5 Drawing Figures

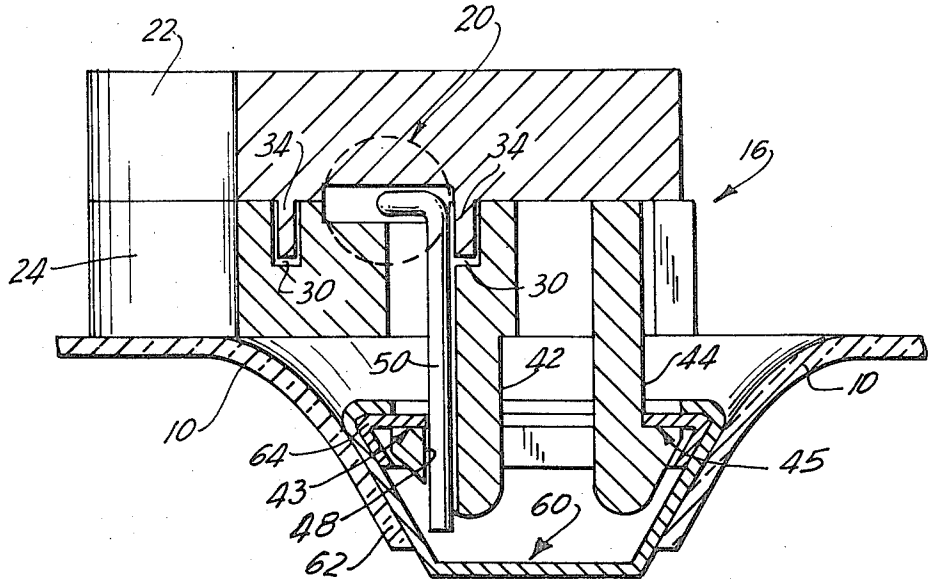

FIG. 1

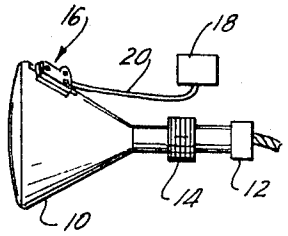

FIG. 2

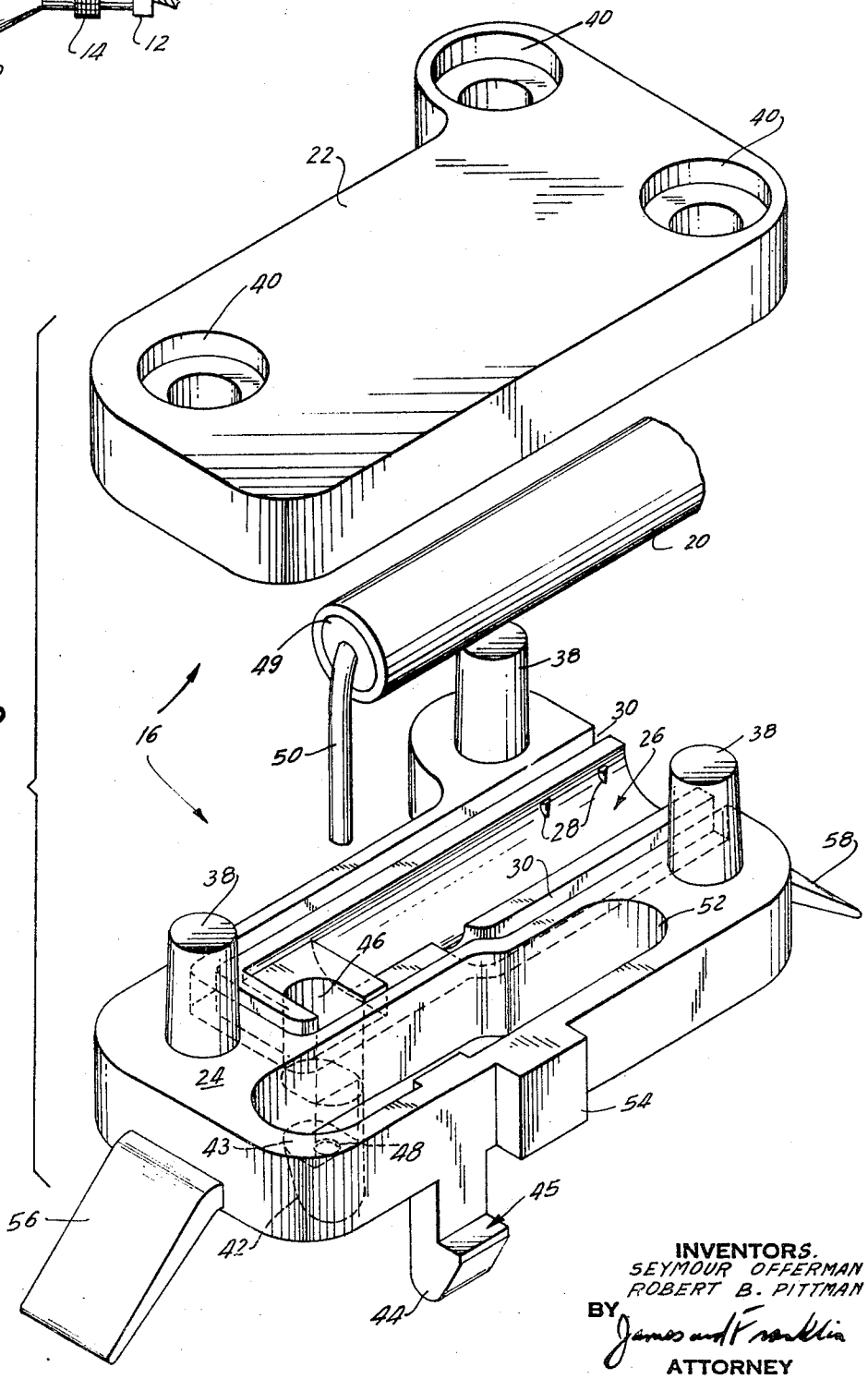

INVENTORS.
SEYMOUR OFFERMAN
ROBERT B. PITTMAN
BY James and Franklin
ATTORNEY

FIG. 3

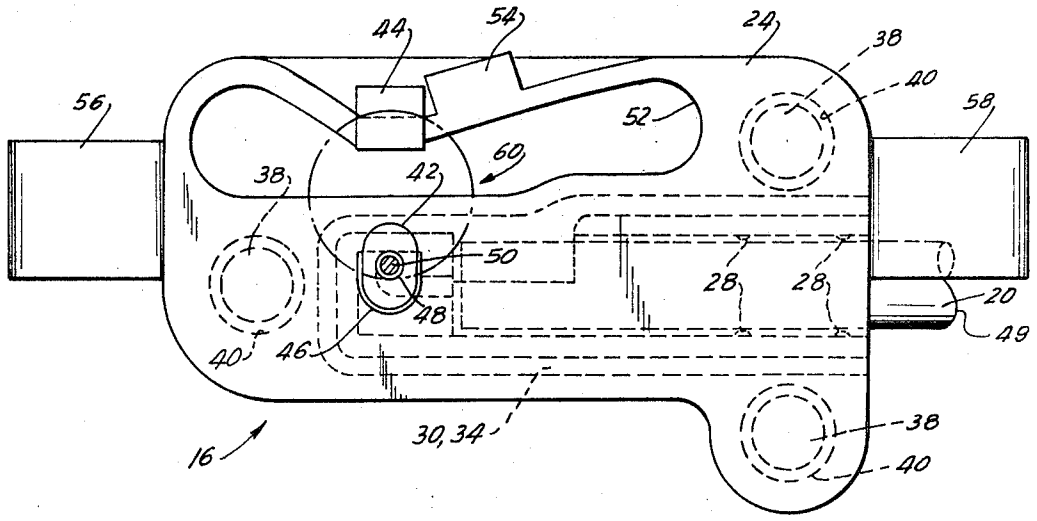

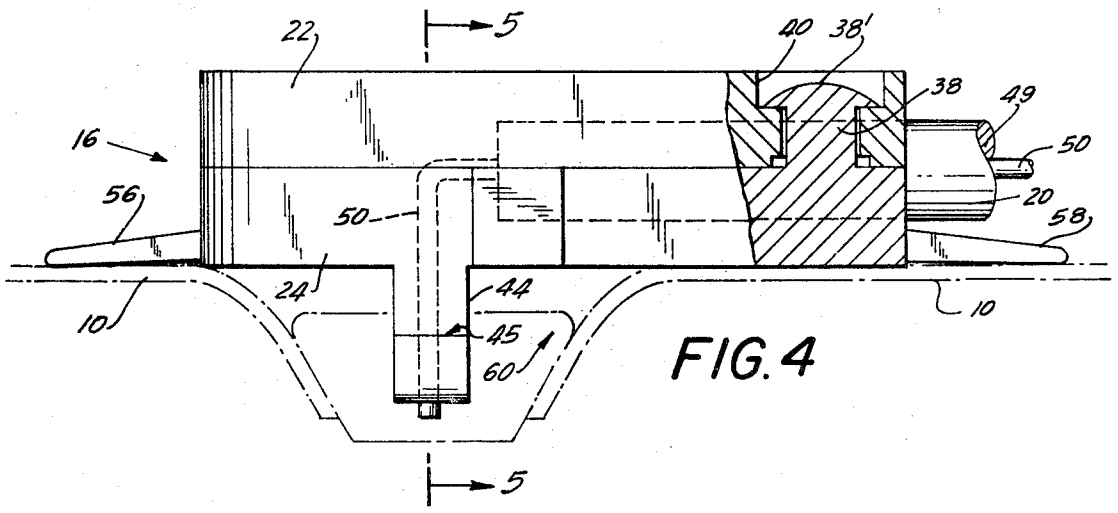

FIG. 4

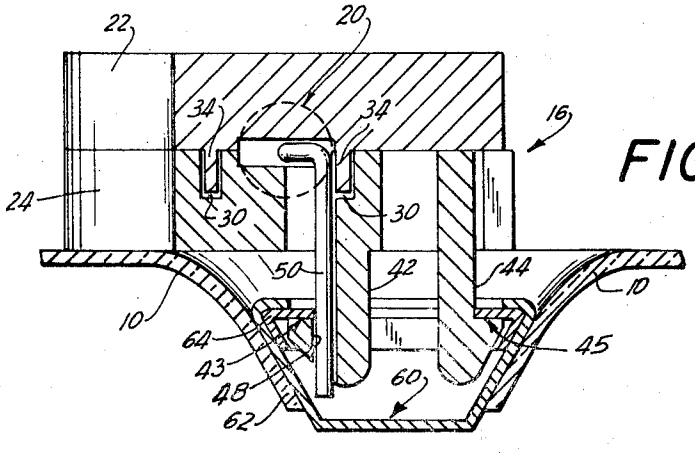

FIG. 5

INVENTORS.
SEYMOUR OFFERMAN
ROBERT B. PITTMAN
BY
James and Franklin
ATTORNEY

KINESCOPE ANODE CONNECTOR

BACKGROUND OF THE INVENTION

This invention relates to kinescope anode connectors and, more particularly, to a connector which urges the center conductor of an anode wire into direct engagement with the kinescope anode terminal.

Kinescopes (picture tubes) are a common component of electronic systems where a visual display is required, such as television, radar, oscilloscopes, etc. In general, they comprise an electron gun for emitting electrons, a screen that emits light from a particular point when bombarded by the electrons at that point, a glass envelope enclosing the before-mentioned elements in a vacuum, and a deflection means for directing the emitted electrons to a selected point on the screen.

To ensure that the emitted electrons hit the screen with sufficient energy to cause the screen to emit a visible amount of light, kinescopes also comprise an anode located near the screen, which is biased to a very high positive potential to attract the negatively charged electrons. The anode, called an ultor, is connected to a terminal provided in a receptacle mounted on the tube and located near the screen, that receptacle being either recessed within or projecting from the glass envelope of the tube. An external power supply is provided as part of the circuits with which the kinescope is used, and it applies the necessary high voltage to a wire. To make electrical connection between the anode terminal in the tube receptacle and the wire an anode connector is used.

Typical prior art anode connectors are made by crimping or soldering a clip to the center conductor of the high voltage anode wire. The cable and clip assembly is then disposed within a flexible insulated housing, typically made from rubber or plastic. The clip is then connected to the ultor receptacle, so that the connection from the wire to the anode is made indirectly through the clip. Since the clip is formed by bending a wire or stamping sheet metal, it has sharp points or edges which can result in corona discharges. If corona discharges do occur, as they usually do in view of the high voltage involved, they not only adversely affect the displayed picture, but also can damage the housing through and around which they occur. Therefore, with prior art connectors, an undue amount of attention is required in their design and manufacture in order to reduce the number of the sharp points and edges on the clip, and to ensure the adequate insulation of the sharp portions of the clip that inevitably occur.

Another problem with prior art connectors is that if an accidental force is applied to the high voltage wire, this force will be applied to the clip which can jar loose from the terminal, thus breaking the connection between the high voltage supply and the tube receptacle. Also, there are difficulties if the connector is to be used with different terminals having different recess depths into the glass envelope of the kinescope because the clip is usually formed to engage a terminal having a particular recess depth.

It is therefore an object of the present invention to provide a connector that does not have any sharp points or edges so as to minimize any possible corona discharges.

It is another object to provide a connector that does not apply any possible force on the anode wire to an electrically conducting element so that the occurrences of accidental disconnections are minimized.

It is still another object to provide a connector that is simple and easy to manufacture and assemble.

It is still another object to provide a connector that can be used with receptacles having varying recess depths.

SUMMARY

In brief, these and other objects are achieved by having a connector that urges a wire into a direct engagement with a terminal in a receptacle without using any intervening electrically conducting elements. To that end, the connector comprises a body that can be secured to the receptacle. The body receives and disposes the wire adjacent the terminal and has a bias means that resiliently urges the wire into direct engagement with that terminal. Preferably, the body is formed of mating upper and lower molded sections that are therefore easily assembled. The lower section can have integrally formed lugs, one to receive and dispose the wire adjacent the terminal, the other to develop a reaction force effective to resiliently urge the wire to directly engage the terminal. Each of the lugs can have a ledge which hooks into the receptacle so that any external forces applied to the cable will be transmitted to said receptacle and to said ledges and not to said wire, so that the wire-terminal relationship is not impaired. A means can be provided to urge said lower section away from the receptacle so that said ledges securely engage said receptacle, thereby permitting said anode connector to be used with receptacles having varying recess depths.

To the accomplishment of the above, and to such other objects as may hereinafter appear, the present invention relates to an anode connector as defined in the appended claims and as described in this specification, taken in conjunction with the drawings in which:

FIG. 1 is a side elevational view of the connector of the present invention in place on a kinescope tube;

FIG. 2 is an exploded three-quarter perspective view of the connector and the wire used therewith;

FIG. 3 is a bottom plan view of the connector when mounted on the anode receptacle;

FIG. 4 is a side view partly in cross-section of the mounted connector; and

FIG. 5 is a front cross-sectional view along the line 5–5 of FIG. 4.

Referring to FIG. 1, there is shown the glass envelope of a kinescope **10**. A socket **12** is disposed at the end of the neck of kinescope **10** to make connection to pins (not shown) that project therefrom, so that external circuits can be connected to various internal electrodes that are not a part of the present invention. Deflection coils **14** are wrapped around the neck so that by applying selected currents to them, the point of impact of an electron beam on the screen of kinescope **10** can be controlled. A receptacle **60** (shown in FIGS. 4 and 5) is mounted on the kinescope envelope and includes a terminal **64** electrically connected in any appropriate manner to the tube anode or ultor. An anode connector **16** engages that anode receptacle **60**. A high voltage power supply **18** is electrically connected by means of a wire **20** to anode connector **16**, and hence to the anode terminal **64** in receptacle **60**, so that a high voltage is applied to the kinescope anode by means of the connector **16**.

FIG. 5 shows the anode receptacle 60 recessed within the envelope of the tube 10. Receptacle 60 comprises an outer cup 62 and internal terminal ledge 64 disposed therein, but projecting radially inwardly beyond the inner circumference of outer cup 62. Although not shown in the drawing, the terminal 64 is electrically connected to the ultor anode of kinescope 10.

FIG. 2 shows that the connector 16 generally comprises an insulating body having upper and lower mating sections 22 and 24 each having substantially identical and registering troughs 26 which, when the sections 22 and 24 are assembled, define a passage opening to the exterior of the body for receiving the high voltage anode wire 20, that wire comprising an insulating sheath 49 and a central conductor 50. Tabs 42 and 44 secure the connector 16 to the anode receptacle 60. Tab 42 has a hole 48 that receives the center conductor 50 of wire 20 to dispose it adjacent the anode terminal 64. Tab 44 resiliently engages the receptacle 60 opposite tab 44 so as to bias arm 42 toward terminal 64 and thus cause conductor 50 to also engage the terminal 64, whereby a direct electrical connection is made.

Disposed within each of said troughs 26 are ribs 28 that, when the connector 16 is fully assembled, grip the outer surface of wire 20, thereby providing strain relief therefor. The ribs 28 may be arranged in opposed pairs, the two ribs in lower trough 26 that are not visible in the drawings being on the wall of said trough at positions opposite those ribs that are visible. Disposed about said lower trough 26 there is a U-shaped groove 30 that receives a correspondingly U-shaped tongue 34 (FIG. 5) that is disposed about upper trough 26 of the upper section 22. When the connector 16 is fully assembled, a voltage barrier is formed about wire 20 by tongue 34 and groove 30 to suppress corona discharges therefrom. Stand-off projections 38 are integrally formed with the lower section 24, and are received by respective securing holes 40 when the connector 16 is assembled. A pair of tabs 42 and 44 are also integrally formed with lower section 24 and extend from the bottom of said section downwardly towards the anode receptacle 60. The tabs 42 and 44 have ledges 43 and 45 respectively to grip corresponding surfaces of the anode receptacle 60, so that these tabs lock onto the receptacle and thus secure the entire body 16 thereto. Tab 42 is disposed beneath a vertical passage 46 formed in section 24, and has a hole 48 that is aligned with said passage 46, so that the inner conductor 50 of wire 20 can pass through passage 46 and then tab hole 48, and hence be disposed to engage the terminal part 64 of the anode receptacle 60 to which tab 42 locks.

A slot 52 is located within lower section 24 between tabs 42 and 44. Since the portion of said section 24 defining the outer surface of slot 52 is made of resilient material, slot 52 can be deformed by pressing a thumb knob 54. Therefore, the distance between said tabs can be diminished so that they can be inserted into the anode terminal, and then spring back to hold connector 16 in place. Resilient wings 56, 58 located on opposite sides of lower section 24 engage the outer surface of the kinescope envelope and urge said section outwardly away from the glass envelope of the kinescope so that the connector 16 can be used with receptacles recessed into their respective envelopes to varying degrees.

To assemble the connector, center conductor 50 is inserted first through passage 46 and then through tab hole 48. Wire 20 is then bent in such a fashion that its insulated part is received by the lower section trough 26. Solvent cement is placed on the underside of tongue 34 by a sponge, and then upper section 22 is placed on top of lower section 24 with standoff holes 40 receiving the standoff projections 38 respectively. As upper section 22 is lowered towards lower section 26, groove 30 receives tongue 34 so that a voltage barrier is formed to minimize corona discharges from wire 20. The solvent cement actually dissolves portions of tongue 34 and groove 30, and upon drying forms a chemical bond between them that helps secure the two sections 22 and 24 together. Ribs 28 grip the wire 20 to provide strain relief so that if the wire 20 is pulled, center conductor 50 will not come out of the holes 46 or 48. As best shown by that part of FIG. 4 that is in cross-section, the tops of standoffs 38 are hot or cold worked to form a rivet top 38'. Therefore, the two sections 22 and 24 are reliably and ruggedly secured together with wire 20 therebetween by both the tops 38' and the bond between the groove 30 and tongue 34.

To make the connection between the center conductor 50 and the anode terminal 64, the tab 42 is inserted within the receptacle 60 so that its ledge 43 engages the underside of the terminal ledge 64. Therefore, center conductor 50 is disposed into direct contact with terminal 64, and hence is directly electrically connected thereto. Then, as best shown in FIG. 4, thumb knob 54 is depressed, thereby deforming the outer wall defining slot 52, and permitting the insertion of tab 44 past terminal ledge 66 and into cup 62. The knob 54 is then released, and said outer wall resiliently tries to return to its initial shape so that tab 44 presses against the right hand portion (as viewed in FIG. 5) of the receptacle 60, thus forcing tab 42 to the left and pressing conductor 50 against the anode terminal 64. If the tabs 42 and 44 are themselves resilient, that resiliency will contribute to the same result. FIG. 4 best discloses how wings 56, 58 are at a slight dihedral angle with respect to the sides of lower section 24 and, therefore, urge it away from the envelope of tube 10, thereby retaining tab ledges 43 and 45 in hooked engagement with the terminal ledge 64. Any possible accidental forces that are applied to cable 20 will be applied through ribs 28 and lower section 24 to ledges 43 and 45 and not to center conductor 50 or any contact clip as in the prior art. This ensures that the connector 16 will not work loose from the tube 10 and that the center conductor 50 stays in direct contact with the terminal 60.

It will be appreciated that the connector of the present invention is simple to make because it consists merely of two molded sections joined with a bared conductor therebetween. There is no need for using a conductive clip, much less bending that clip into corona-producing shapes. By virtue of its construction it urges a conductor wire into direct contact with a terminal no matter what the recess depth of the receptacle for that terminal without making use of any kind of intervening clip or conductor that can cause corona discharges. This is achieved in a rugged fashion, that will strong resist connector pullout by accidental and extraneous forces.

Although the present invention has been disclosed with respect to but a single embodiment, it is to be understood that many variations may be made therein, all without departing from the spirit and scope of the invention as defined in the following claims.

We claim:

1. A connector for electrically connecting a cable wire to a receptacle having a terminal, said connector comprising a body having means thereon for engaging said receptacle and detachably securing said connector body thereto, a first means for receiving said wire; a second means operatively connected to said body for disposing said wire adjacent said terminal; and a bias means operatively connected to said body for resliently urging said wire into engagement with said terminal; whereby said wire makes electrical connection with said terminal without using any intervening conducting elements.

2. A connector for electrically connecting a cable wire to a receptacle having a terminal, said connector comprising a body having a first means for receiving said wire; a second means operatively connected to said body for disposing said wire adjacent said terminal; and a bias means operatively connected to said body for resiliently urging said wire into engagement with said terminal; whereby said wire makes electrical connection with said terminal without using any intervening conducting elements, wherein said body comprises making first and second sections, each of said sections having a trough for receiving said wire.

3. The connector of claim 2, further comprising means located within said troughs for relieving strain within said wire.

4. The connector of claim 2, wherein each of said sections further comprises means adjacent said troughs for suppressing corona discharge.

5. The connector of claim 4, wherein said first section suppressing means comprises a tongue disposed about said first section trough, and wherein said second section suppressing means comprises a groove disposed about said second section trough, said tongue being received in said groove.

6. The connector of claim 2, in which said disposing means comprises a part integrally formed with one of said sections, said one of said sections comprising a resilient means adapted to operatvely engage with and be deformed by said receptacle and effective to produce a biasing force urging said part toward said receptacle terminal, said part being adapted to engage said wire and urge it toward said receptacle terminal, said resilient means comprising said bias means.

7. The connector of claim 6, in which said part is provided with a hole for receiving said wire.

8. The connector of claim 7, in which said resilient means comprises a second part integrally formed with said one of said sections, said integrally formed parts extending from said section so as to be engageable with said receptacle.

9. The connector of claim 8, in which said one of said sections is provided with an opening adjacent said resilient means, whereby said reilient means can be moved with respect to said section proper.

10. The connector of claim 6, in which said resilient means comprises a second part integrally formed with said one of said sections, said integrally formed parts extending from said section so as to be engageable with said receptacle.

11. The connector of claim 10, in which said one of said sections is provided with an opening adjacent said resilient means, whereby said resilient means can be moved with respect to said section proper.

12. The connector of claim 9, in which each of said parts comprises a ledge section adapted to engage corresponding portions of said receptacle.

13. The connector of claim 8, in which each of said parts comprises a ledge section adapted to engage corresponding portions of said receptacle.

14. An anode connector or the like comprising an insulated body adapted to cooperate with a receptacle having a recess containing an electrical terminal, means operatively connected to said body, engageable with said receptacle, and effective to secure said body to said receptacle, an element extending from said body and adapted to enter said recess, said element having a surface opposing said terminal, said body having a space in which a cable having a conductor is adapted to be received and having an opening communicating between said space and said element surface through which opening said cable conductor is adapted to pass and project, said projecting portion of said conductor then being interposed between said element surface and said receptacle terminal, and means operatively connected to said element and effective to urge it toward said receptacle terminal, thereby to press said cable against said terminal.

15. The connector of claim 14, in which said element is provided with an opening at the end of said surface remote from said body, the end of said conductor being adapted to be received in said element opening.

16. The connector of claim 15, in which said element comprises part of said securing means and is provided with a catch part remote from said body which makes locking engagement with said receptacle.

17. The connector of claim 14, in which said element comprises part of said securing means and is provided with a catch part remote from said body which makes locking engagement with said receptacle.

18. The connector of claim 17, in which said element opening is formed in the catch part of said element.

19. The connector of claim 16, in which said element opening is formed in the catch part of said element and is in registration with said body opening.

20. The connector of claim 14, in which said cable receiving space extends generally horizontally in said body and opens to the side thereof, said body opening extending generally vertically.

21. The connector of claim 14, in which said body comprises a bottom and an upper part, said bottom part comprising said element, said opening, and at least a portion of said space, said space in said bottom part being open at its top, whereby said cable may be inserted thereinto via said open top, said cover part closing said upper space at its top, and means for securing said cover part on said bottom part.

22. The connector of claim 14, in which said urging means comprises said body being provided with a wall portion spaced from a body proper and resiliently urged away from said body proper, depending from said side wall portion, a second element depending from said body proper, one of said elements comprising said element having said surface.

* * * * *