US 20180168625A1

(19) United States

(12) Patent Application Publication

Posada et al.

(10) Pub. No.: US 2018/0168625 A1

(43) Pub. Date: Jun. 21, 2018

(54) **SURGICAL STAPLING INSTRUMENTS WITH SMART STAPLE CARTRIDGES**

(71) Applicant: **Ethicon Endo-Surgery, LLC**, Guaynabo, PR (US)

(72) Inventors: **Sol A. Posada**, Cincinnati, OH (US); **Mark D. Overmyer**, Cincinnati, OH (US); **Raymond E. Parfett**, Loveland, OH (US); **Brian D. Schings**, Cincinnati, OH (US); **Brett E. Swensgard**, West Chester, OH (US); **Richard L. Leimbach**, Cincinnati, OH (US); **Shane R. Adams**, Lebanon, OH (US); **David C. Yates**, West Chester, OH (US); **Jason L. Harris**, Lebanon, OH (US); **Frederick E. Shelton, IV**, Hillsboro, OH (US); **Kharyl Evenson George Stephens**, Cincinnati, OH (US); **Jason M. Rector**, Maineville, OH (US)

(21) Appl. No.: **15/385,927**

(22) Filed: **Dec. 21, 2016**

Publication Classification

(51) **Int. Cl.**

A61B 17/072 (2006.01)

A61B 34/30 (2006.01)

(52) **U.S. Cl.**

CPC ***A61B 17/07207*** (2013.01); ***A61B 34/30*** (2016.02); *A61B 2017/00477* (2013.01); *A61B 2017/07271* (2013.01); *A61B 2017/07228* (2013.01)

(57) **ABSTRACT**

A surgical instrument includes an anvil and an elongate channel. The elongate channel includes a plurality of first electrical contacts and a plurality of electrical connectors comprising a plurality of second electrical contacts, wherein the electrical connectors are spring-biased such that a gap is maintained between the first electrical contacts and the second electrical contacts. The surgical instrument further includes a staple cartridge releasably attachable to the elongate channel, wherein the staple cartridge has a cartridge body comprising a plurality of staple cavities, a plurality of staples deployable from the staple cavities into the tissue, and a plurality of third electrical contacts, wherein the attachment of the staple cartridge to the elongate channel moves the electrical connectors causing the second electrical contacts to bridge the gap and become electrically coupled to the first electrical contacts.

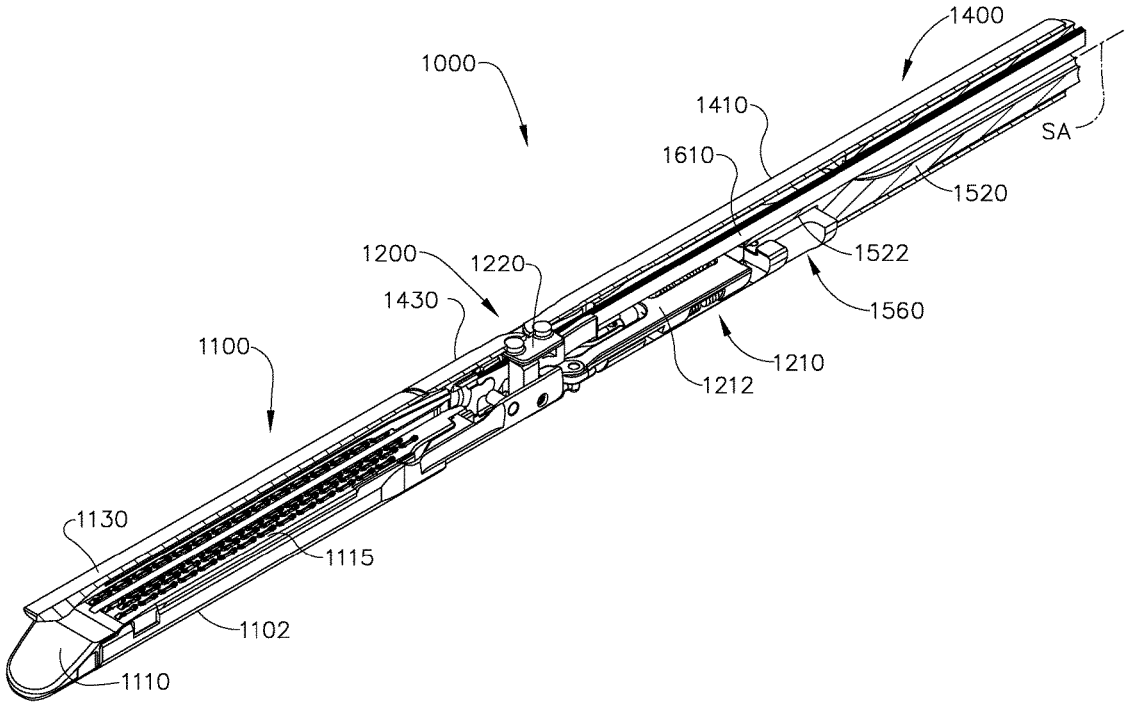

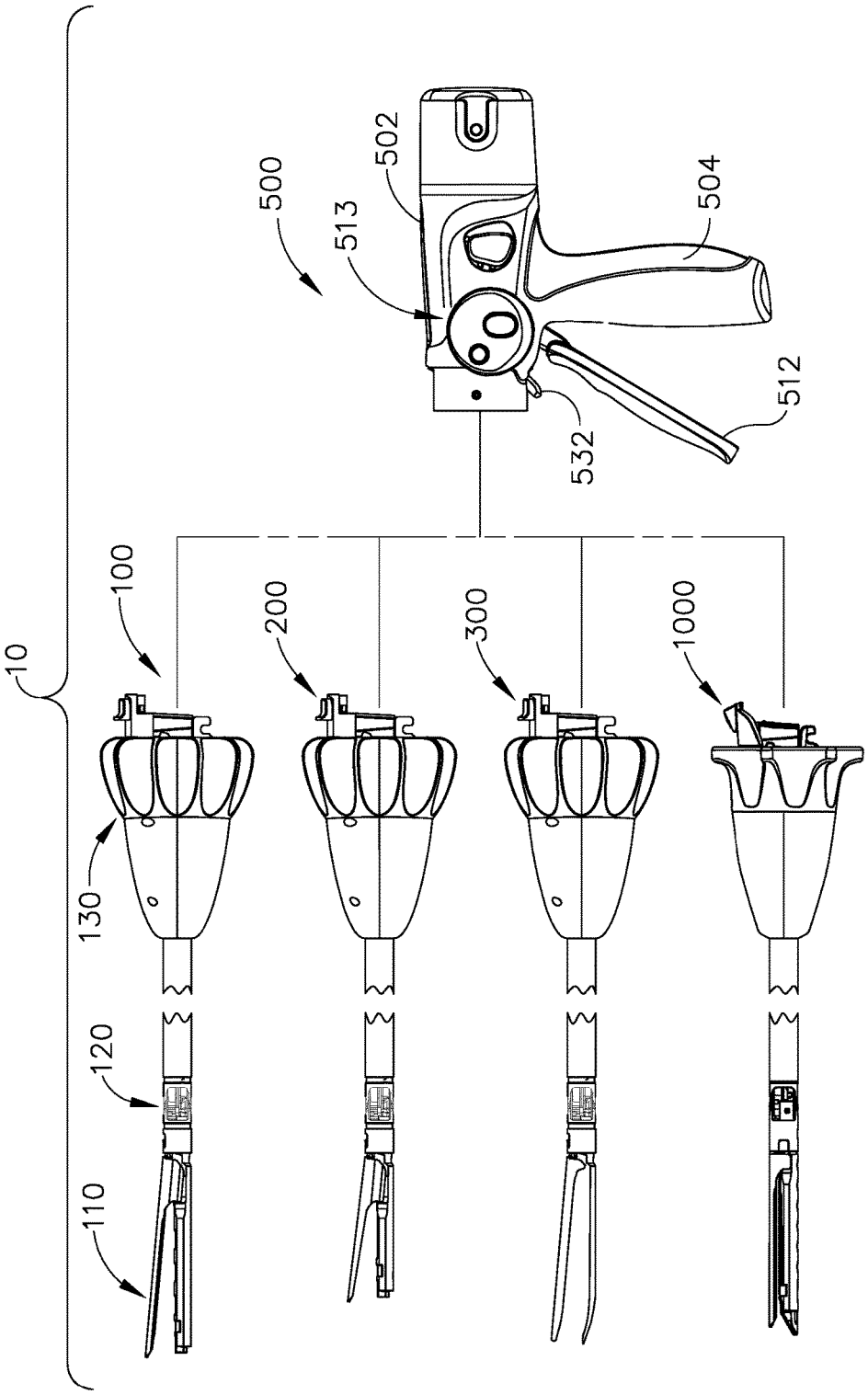

FIG. 1

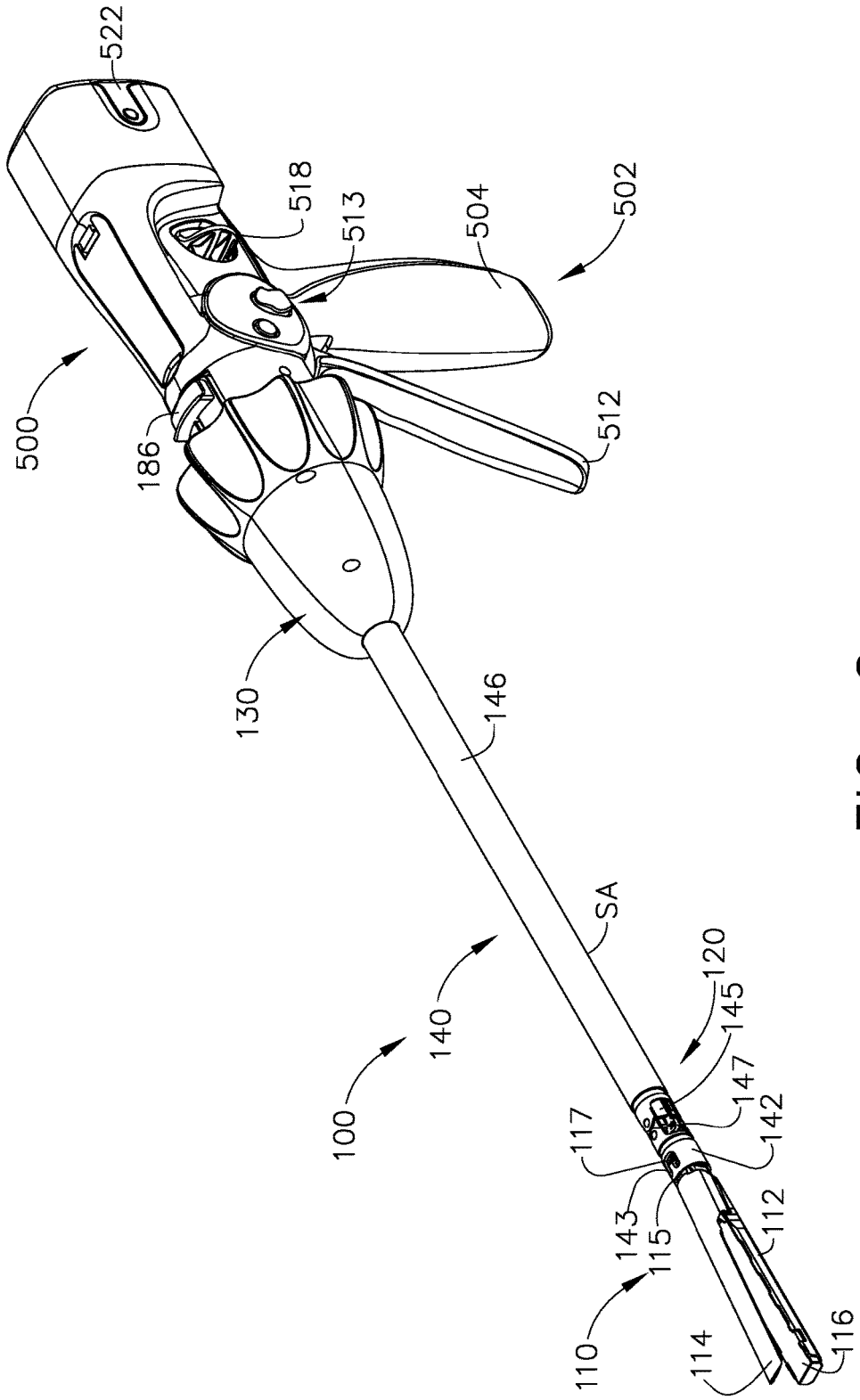
522
518
513
504
502
500
186
512
130
146
SA
140
120
145
147
100
117
142
143
115
112
110
114
116

FIG. 2

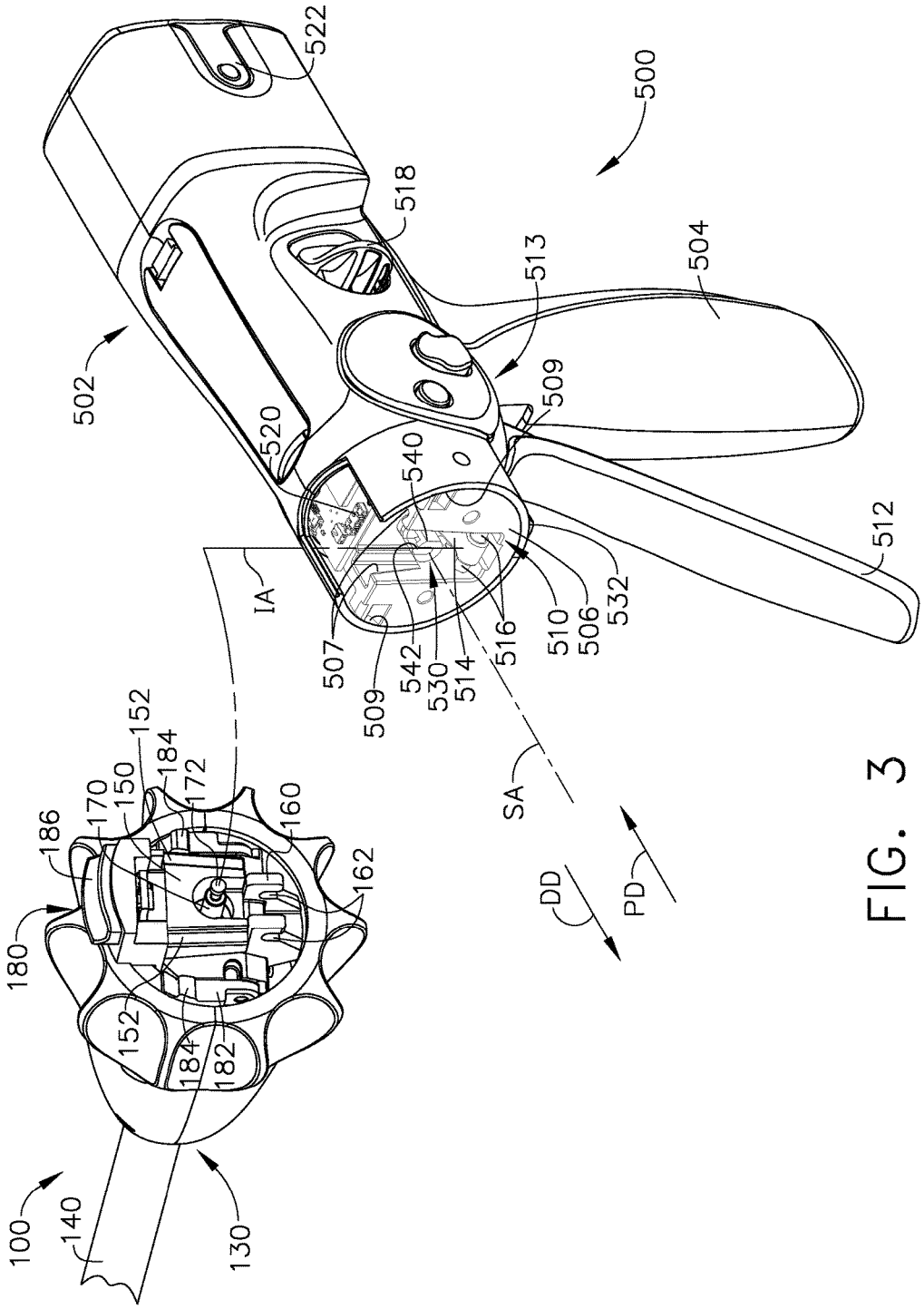
522
500
518
513
504
502
509
520
540
512
IA
507
509
542
530
514
516
510
506
532
SA
DD
PD
152
184
172
150
170
186
160
162
180
152
184
182
100
140
130

FIG. 3

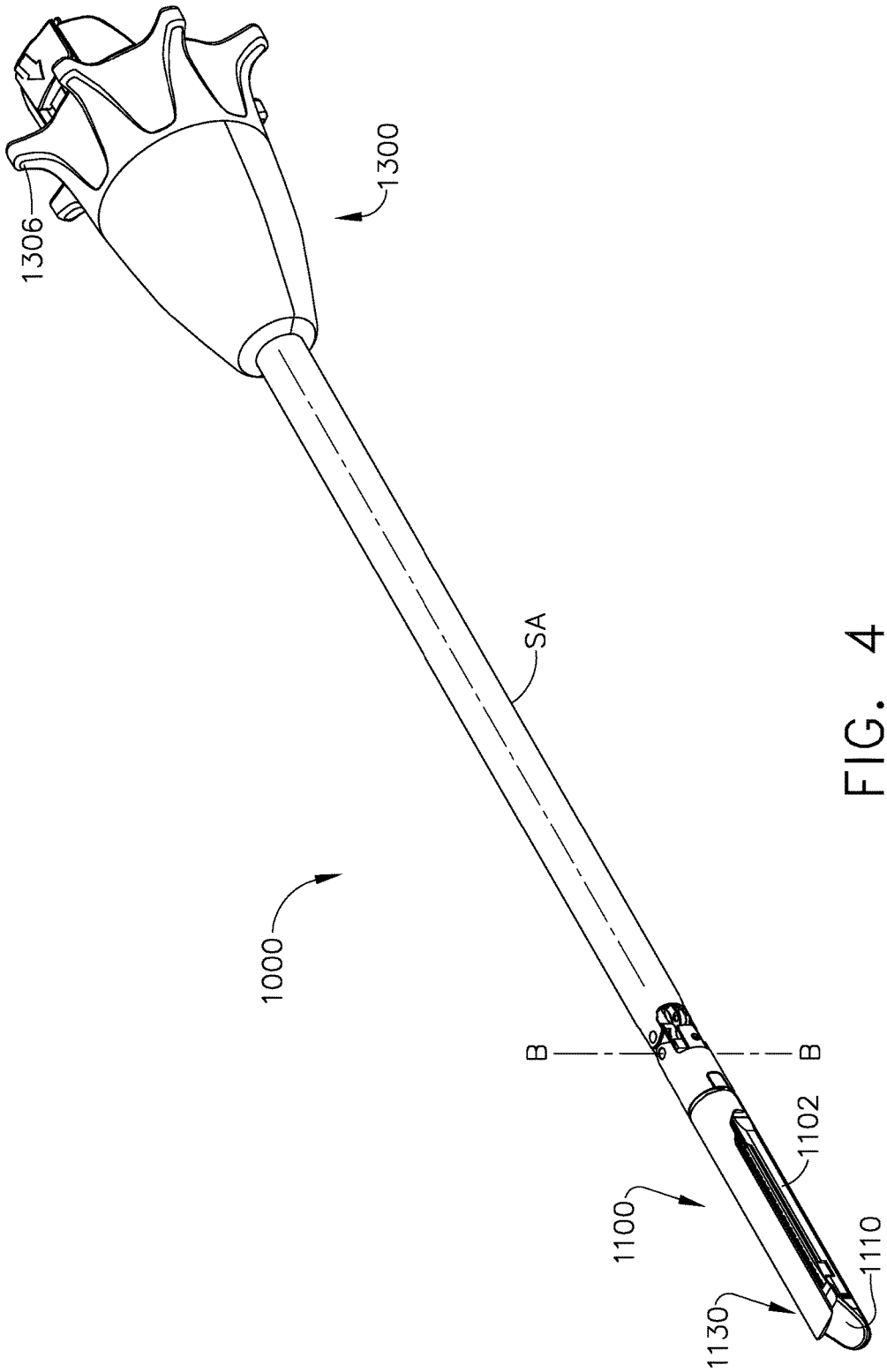

FIG. 4

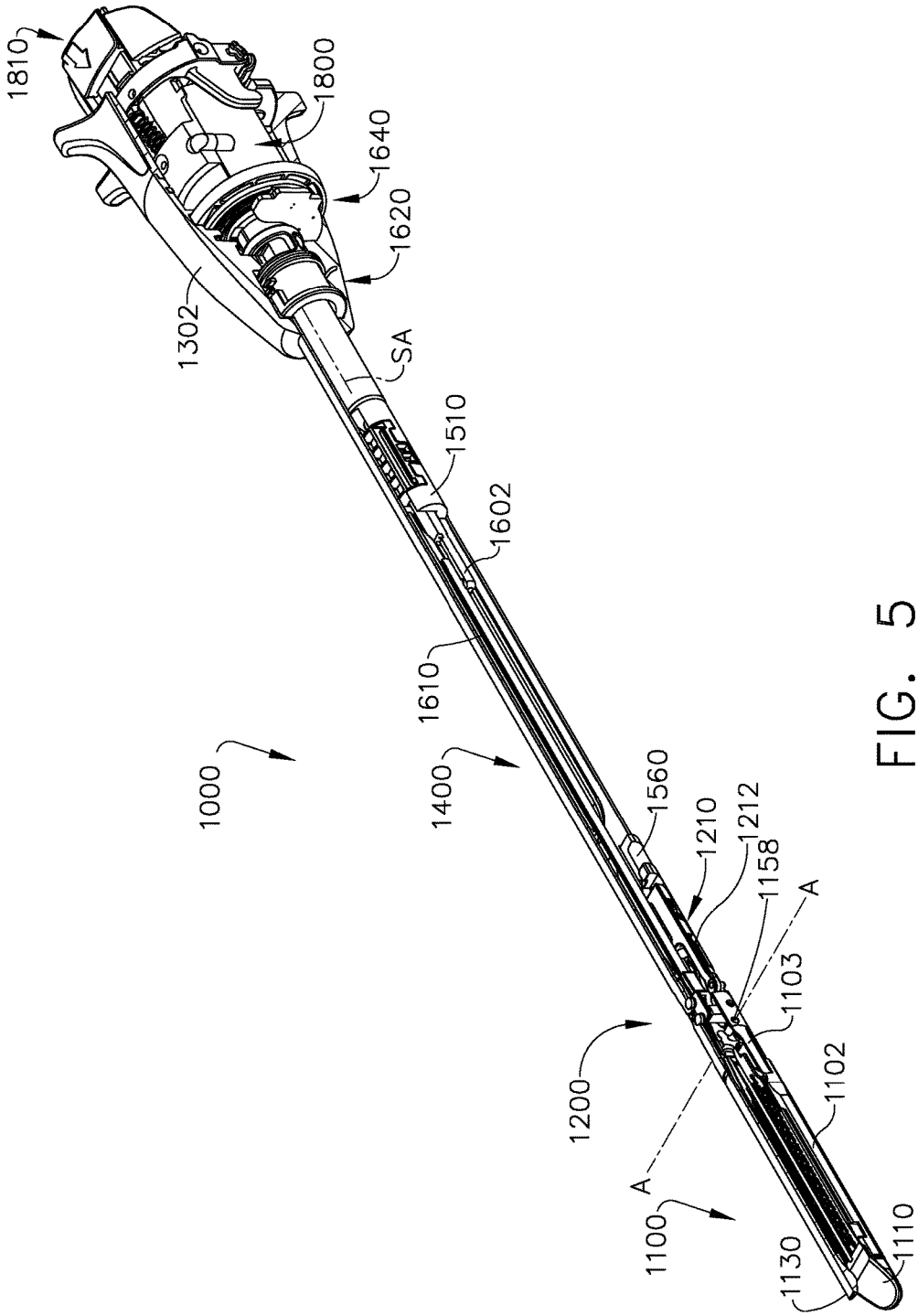
1810
1800
1640
1620
1302
SA
1510
1602
1610
1000
1400
1560
1210
1212
1158
A
1103
1200
1102
A
1100
1130
1110

FIG. 5

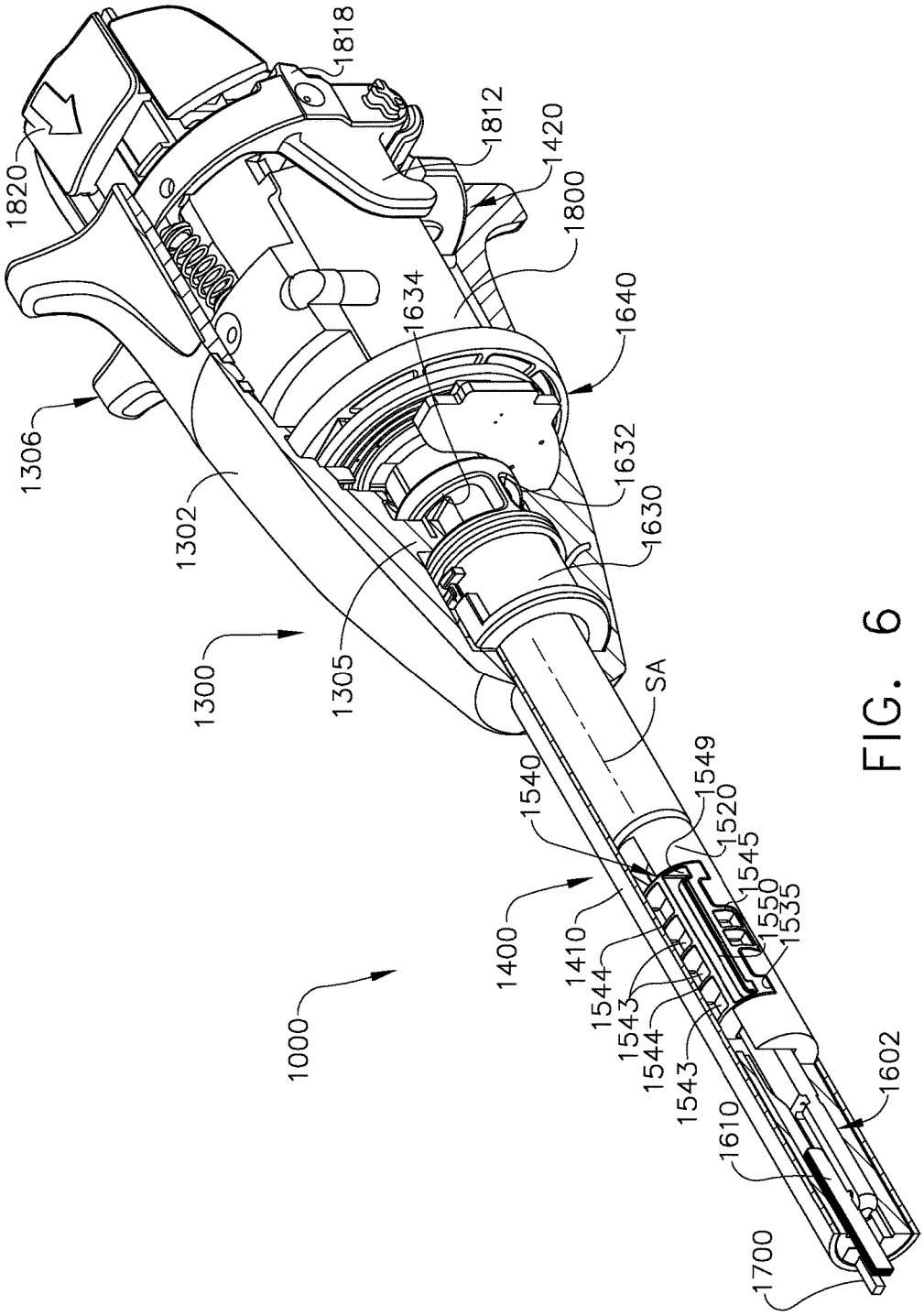
1820
1818
1812
1420
1800
1634
1640
1306
1632
1302
1630
1300
1305
SA
1540
1549
1520
1545
1550
1535
1400
1410
1544
1543
1544
1543
1610
1602
1000
1700

FIG. 6

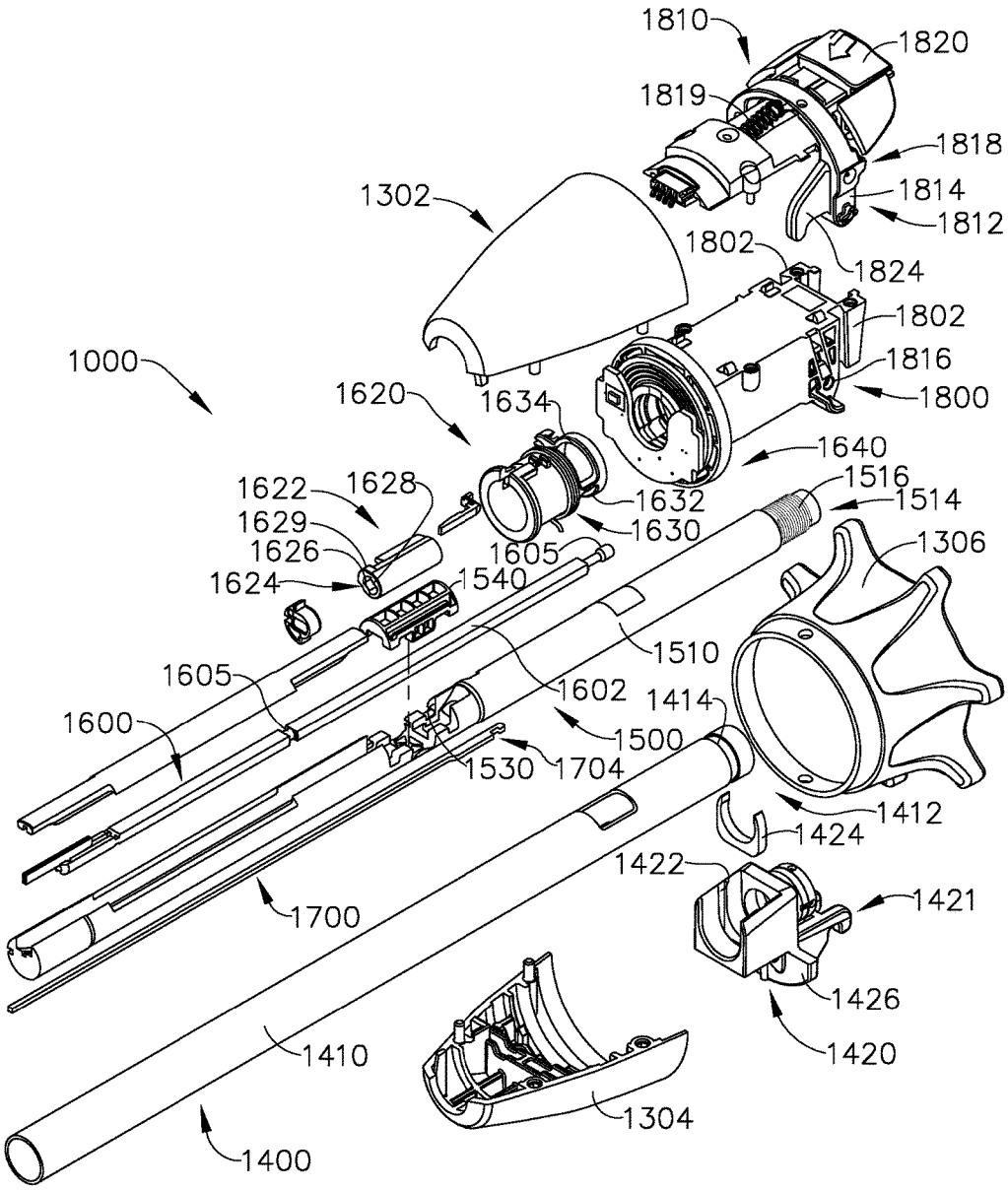
1810
1820
1819
1818
1814
1812
1302
1802
1824
1802
1816
1800
1000
1620
1634
1640
1516
1514
1622
1628
1632
1629
1630
1626
1605
1306
1624
1540
1510
1605
1602
1414
1600
1500
1530
1704
1412
1424
1422
1421
1700
1426
1420
1410
1304
1400

FIG. 7

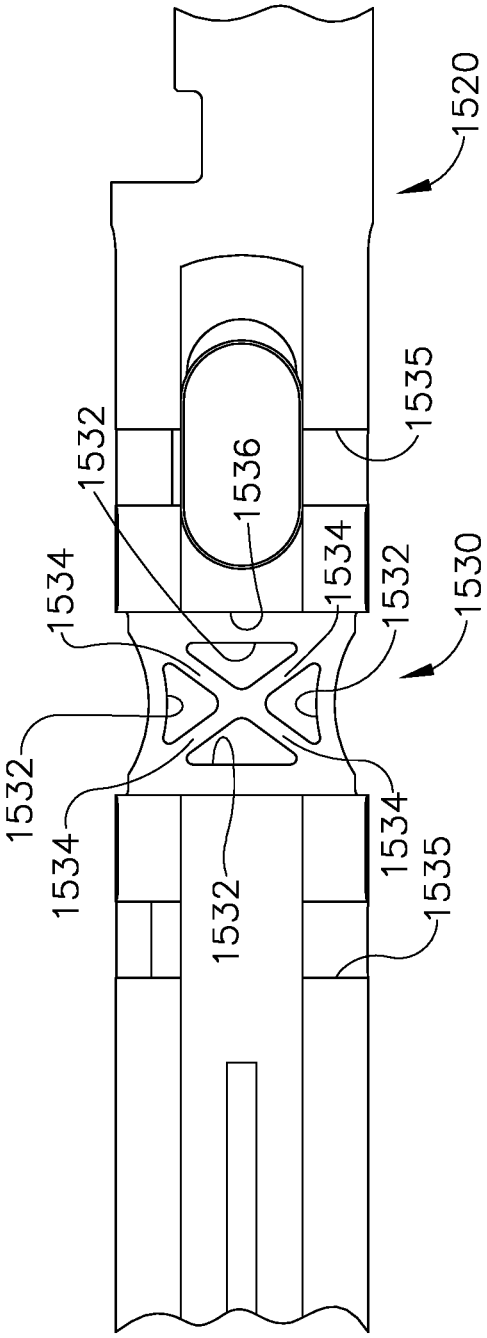
1520
1535
1532
1536
1534
1534
1532
1530
1532
1534
1534
1532
1535

FIG. 7A

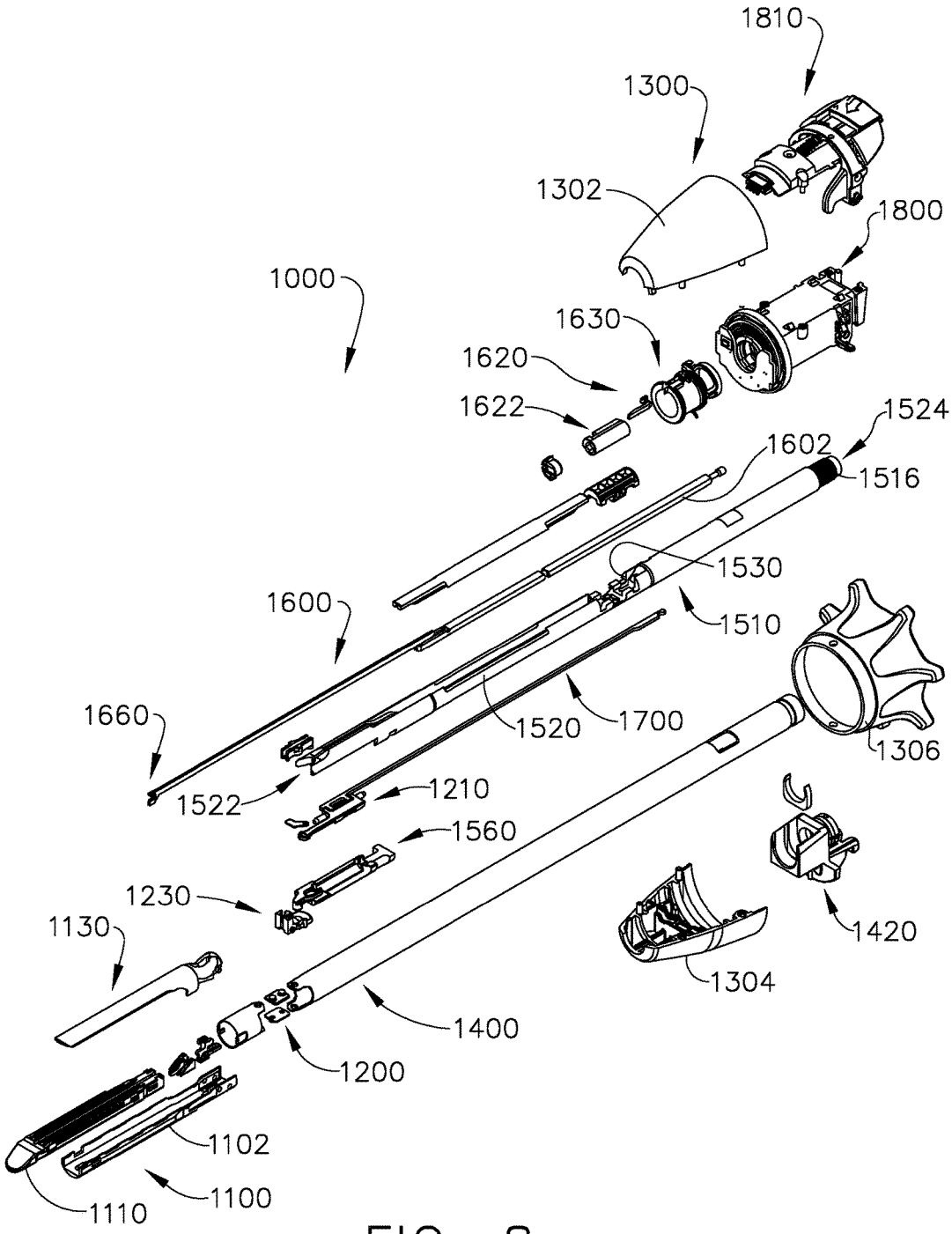
1810
1300
1302
1800
1000
1630
1620
1622
1524
1602
1516
1530
1600
1510
1660
1520
1700
1306
1522
1210
1560
1230
1420
1130
1304
1400
1200
1102
1100
1110

FIG. 8

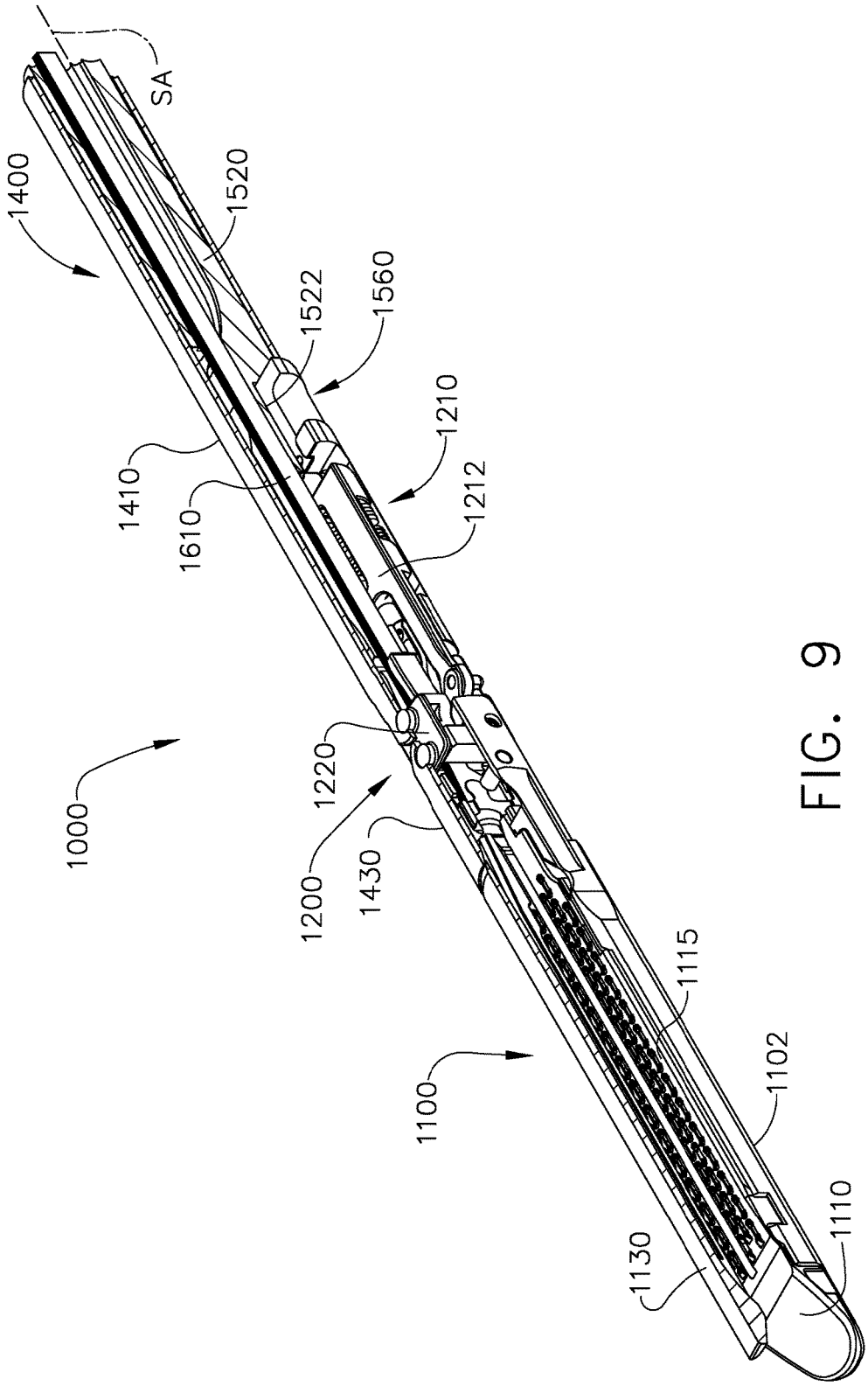
SA
1400
1520
1522
1560
1210
1212
1410
1610
1220
1000
1200
1430
1115
1100
1102
1110
1130

FIG. 9

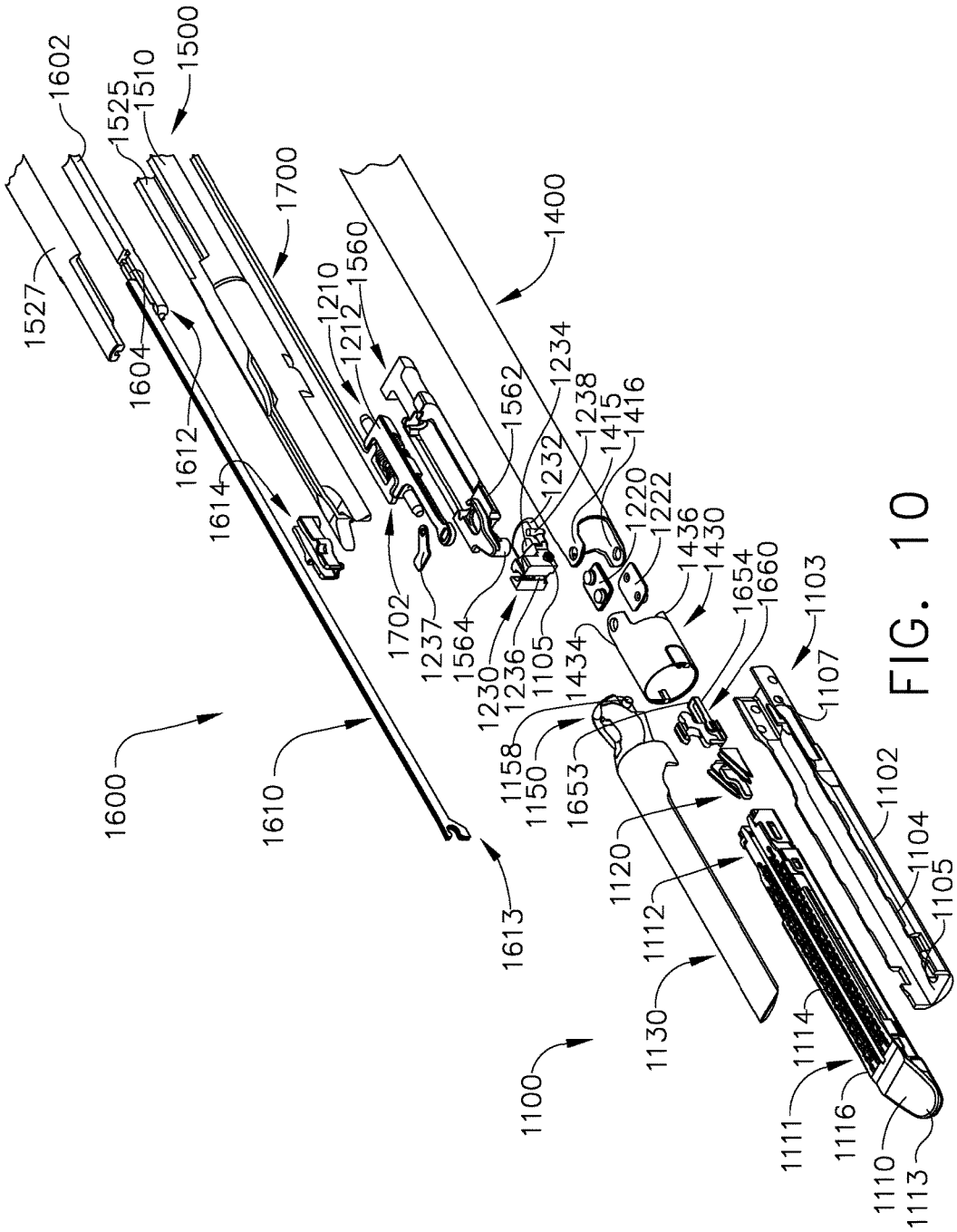
1602
1525
1510
1500
1527
1604
1612
1614
1700
1210
1212
1560
1400
1562
1234
1238
1415
1416
1232
1220
1222
1436
1430
1654
1660
1103
1107
1702
1237
1564
1230
1236
1105
1434
1158
1150
1653
1120
1112
1130
1100
1600
1610
1613
1102
1104
1105
1114
1111
1116
1110
1113

FIG. 10

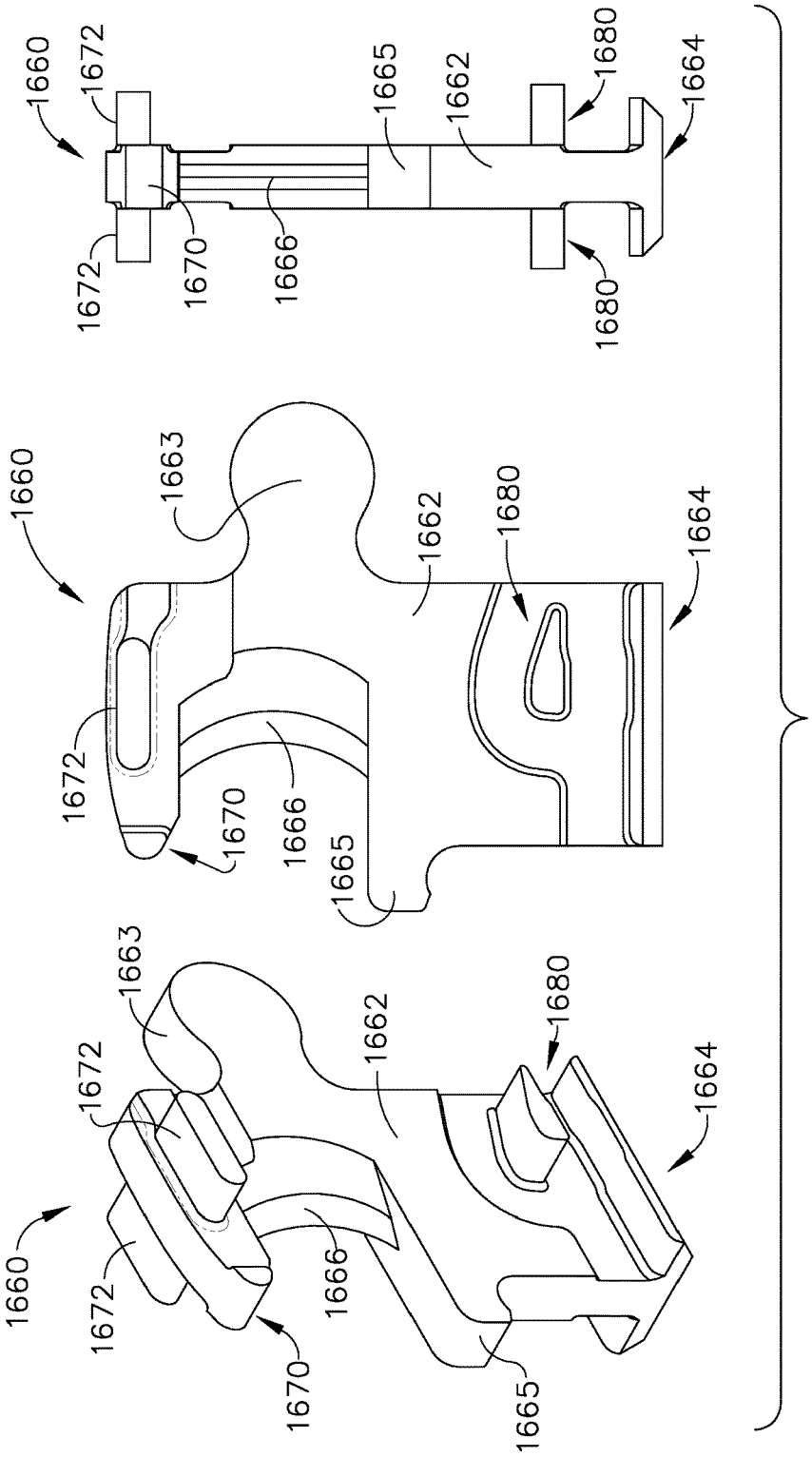

FIG. 11

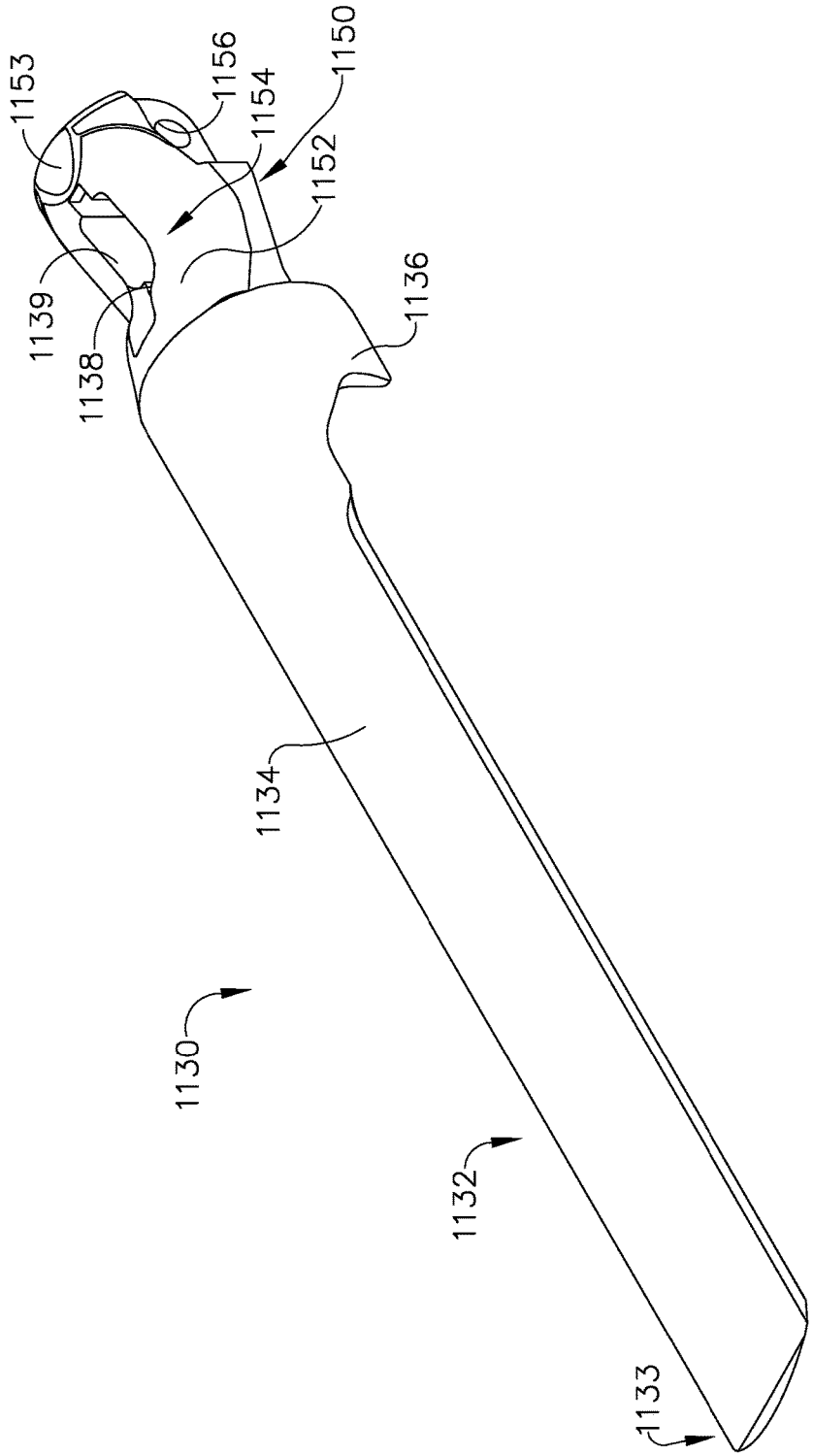

FIG. 12

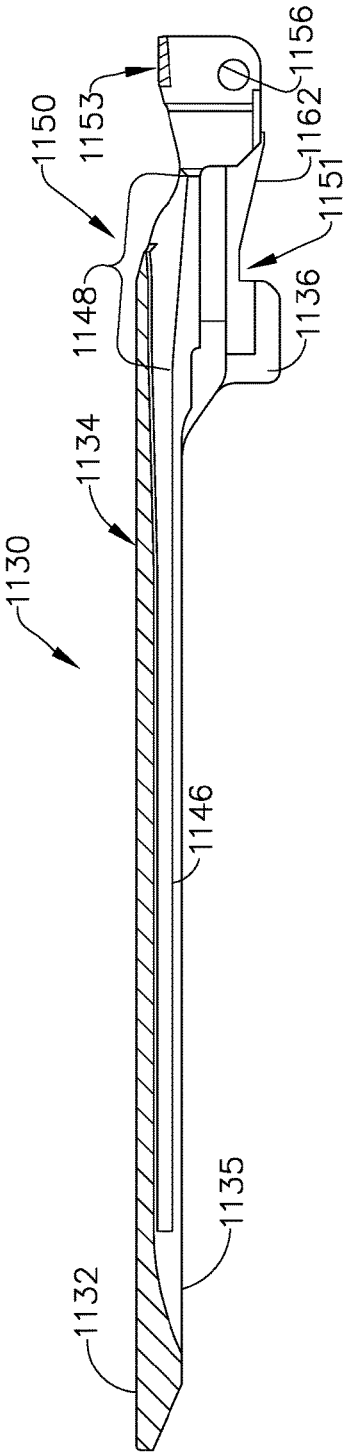
1130
1134
1148
1150
1153
1156
1162
1151
1136
1146
1135
1132

FIG. 13

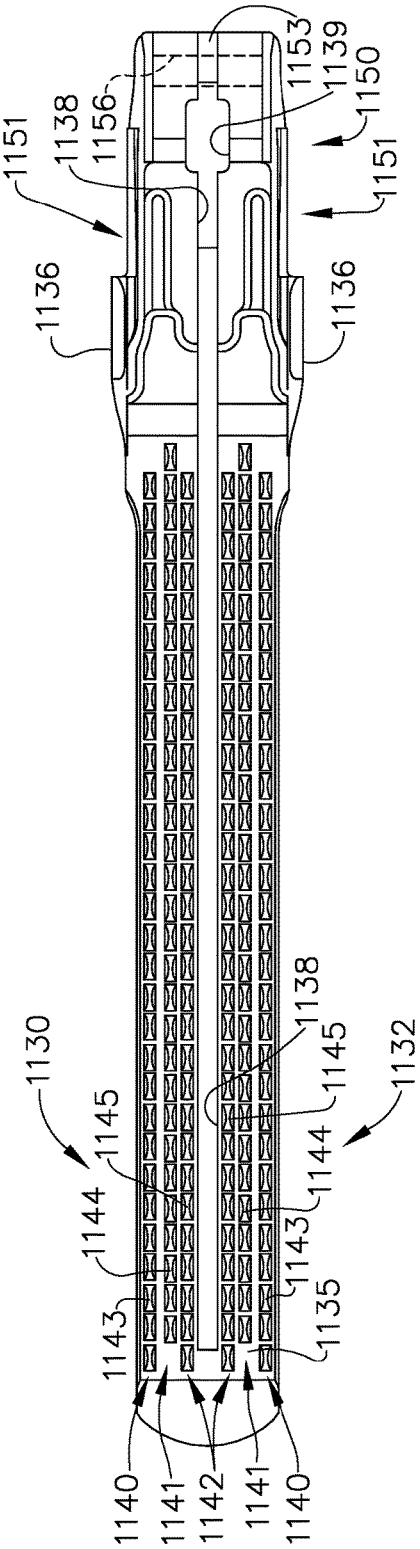
1151
1138
1156
1153
1139
1150
1151
1136
1136
1130
1138
1145
1145
1132
1144
1144
1143
1143
1135
1135
1140
1141
1142
1141
1140

FIG. 14

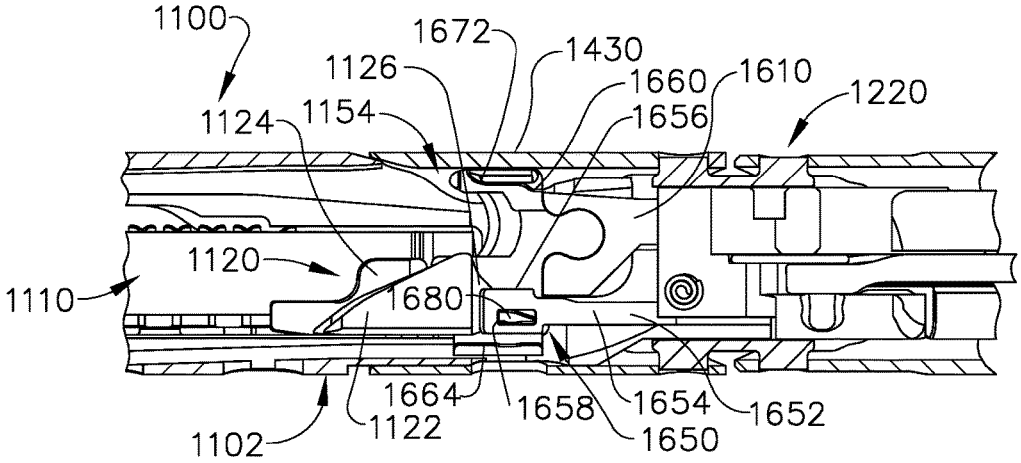

FIG. 15

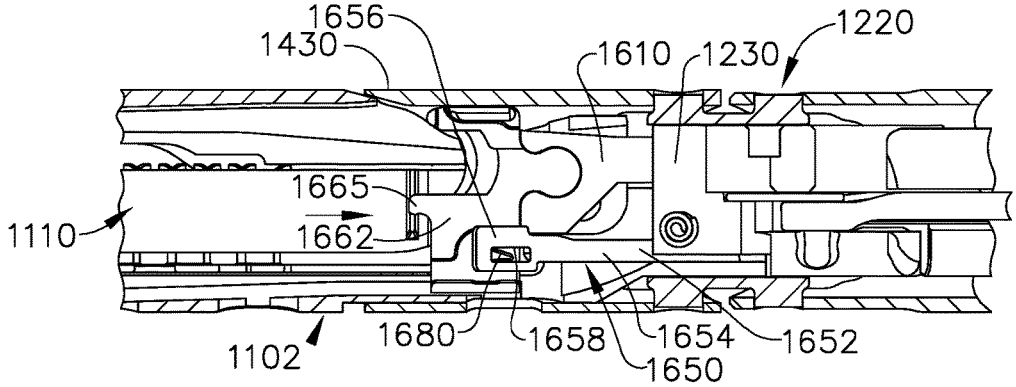

FIG. 16

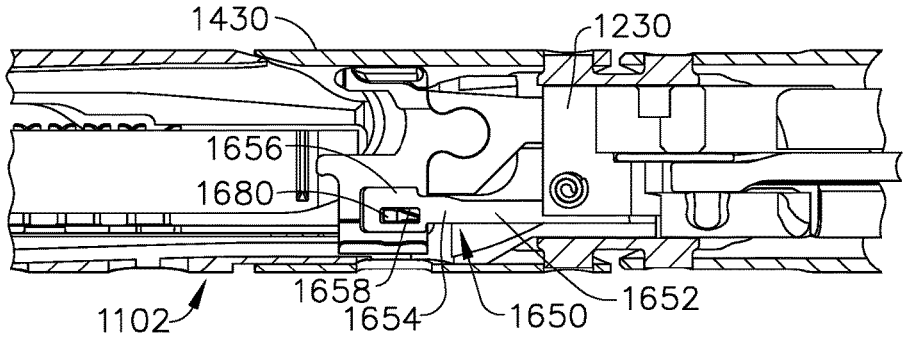

FIG. 17

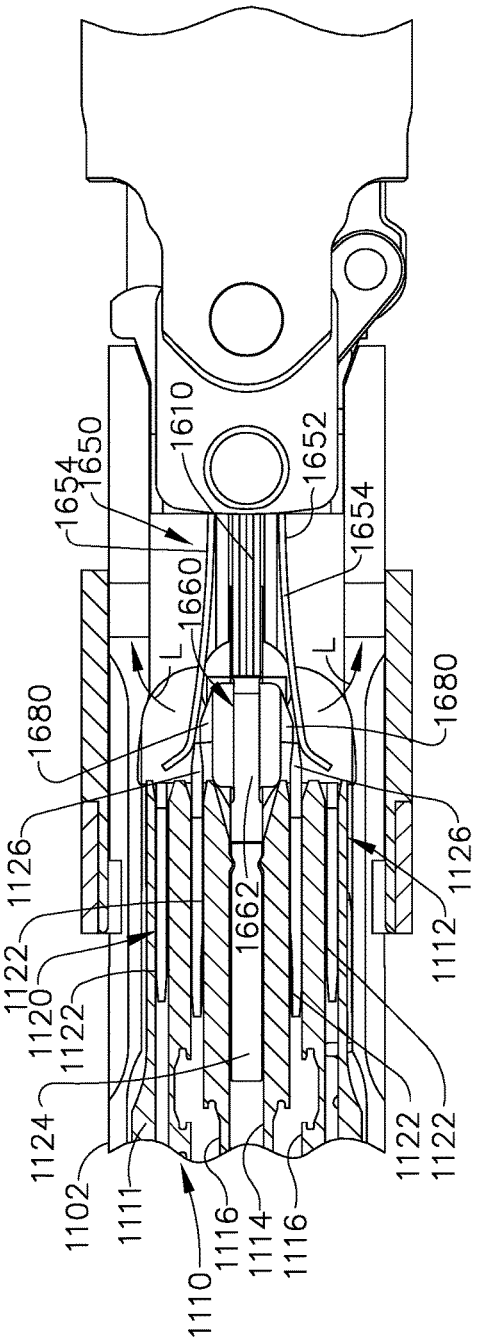
1610
1650
1654
1652
1654
1660
L
L
1680
1680
1126
1126
1662
1122
1120
1122
1112
1124
1122
1122
1102
1111
1110
1116
1114
1116

FIG. 18

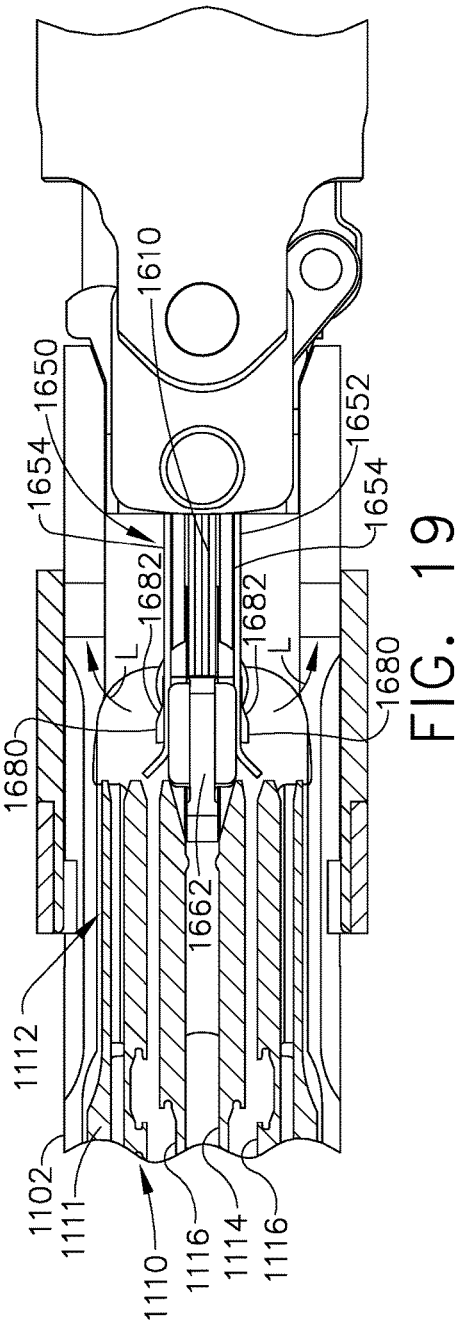
1610
1650
1654
1652
1654
1682
1682
L
L
1680
1680
1662
1112
1102
1111
1110
1116
1114
1116

FIG. 19

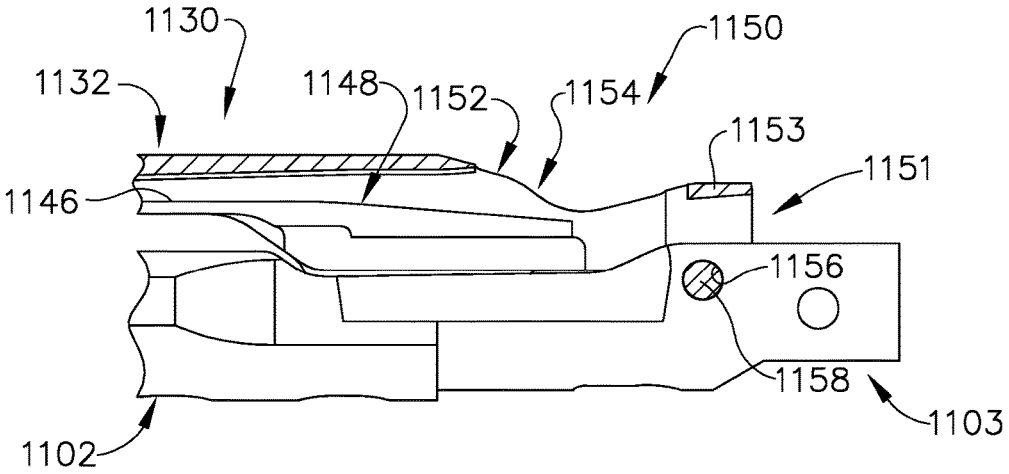
1130
1150
1132
1148
1152
1154
1153
1151
1146
1156
1158
1103
1102

FIG. 20

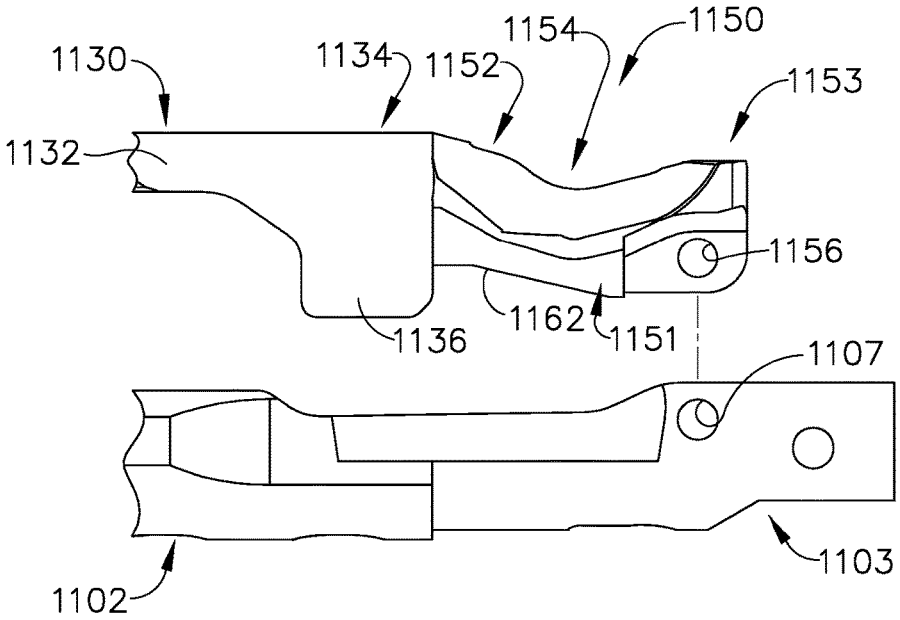
1154
1150
1130
1134
1152
1153
1132
1156
1162
1151
1136
1107
1103
1102

FIG. 21

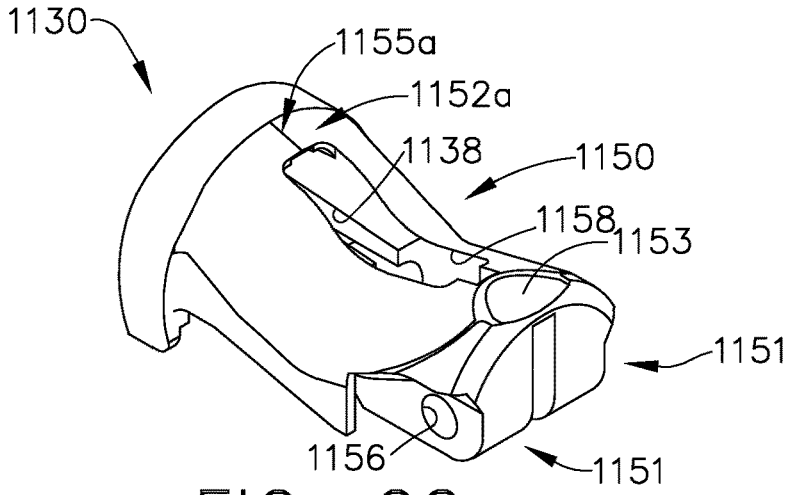

FIG. 22

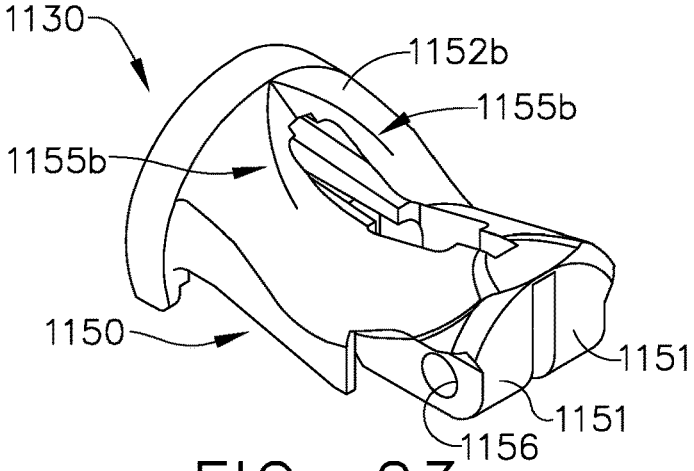

FIG. 23

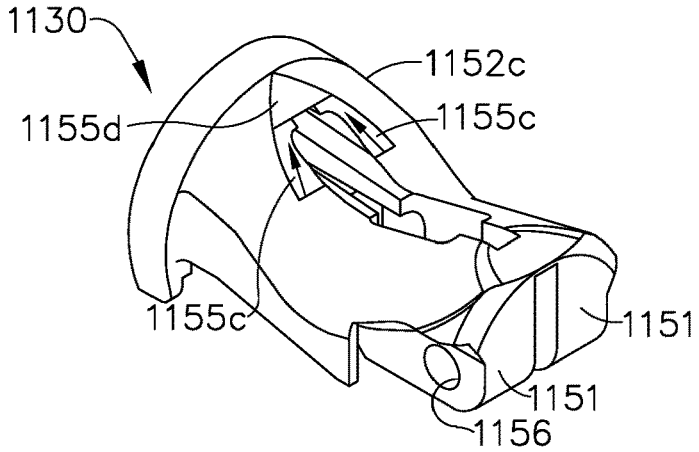

FIG. 24

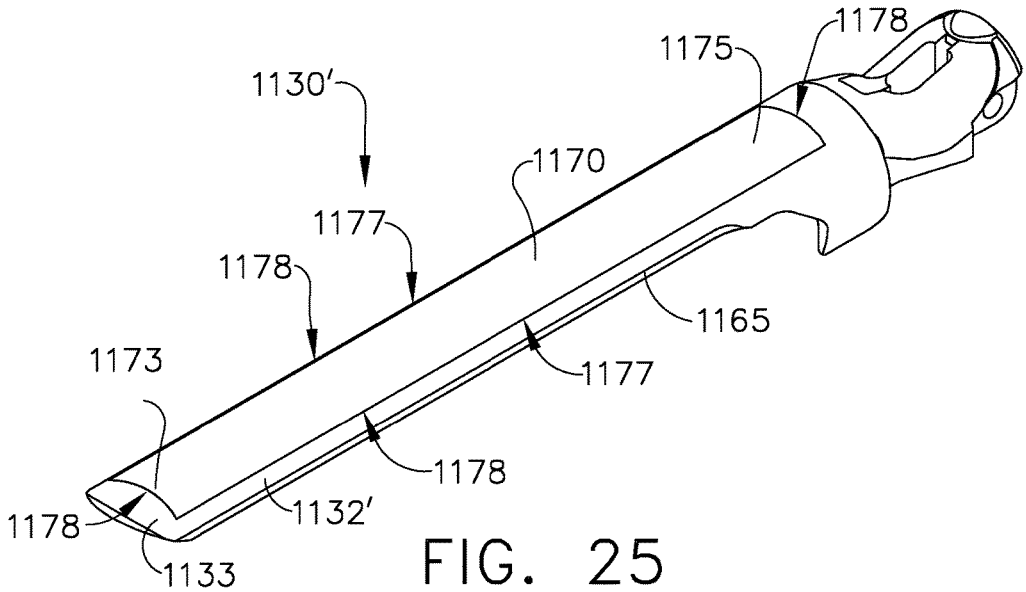
1178
1175
1130′
1170
1177
1178
1165
1173
1177
1178
1178
1132′
1133

FIG. 25

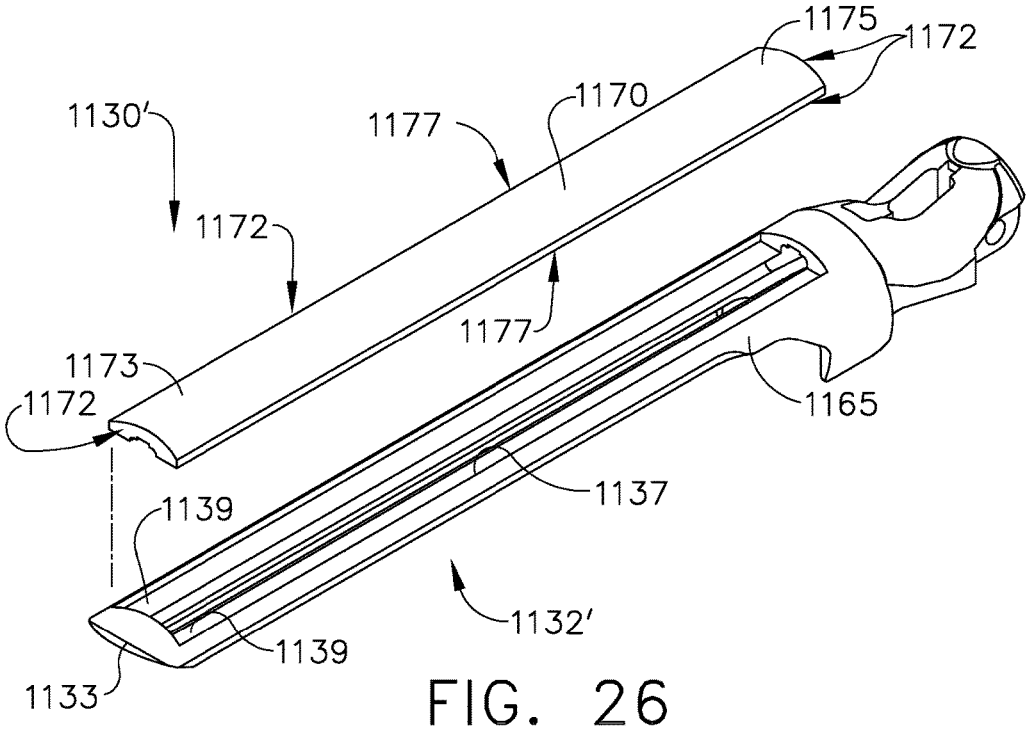
1175
1172
1130′
1170
1177
1172
1177
1173
1172
1165
1137
1139
1132′
1139
1133

FIG. 26

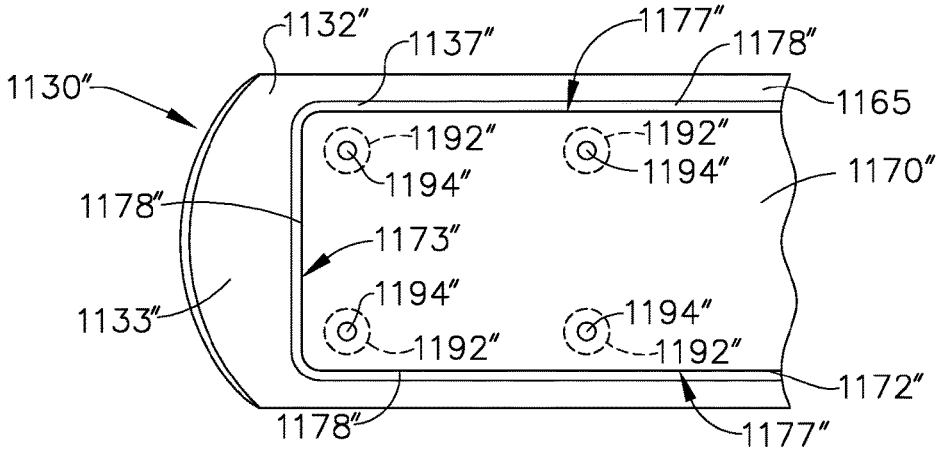

FIG. 31

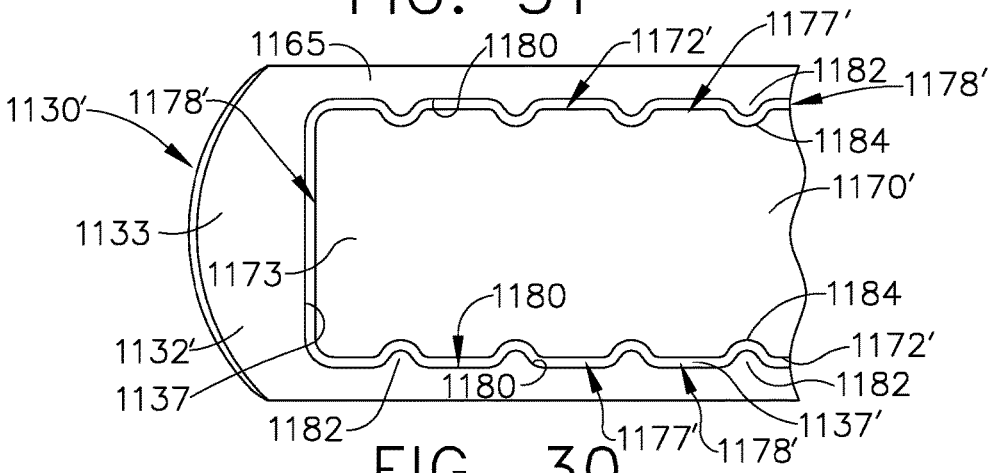

FIG. 30

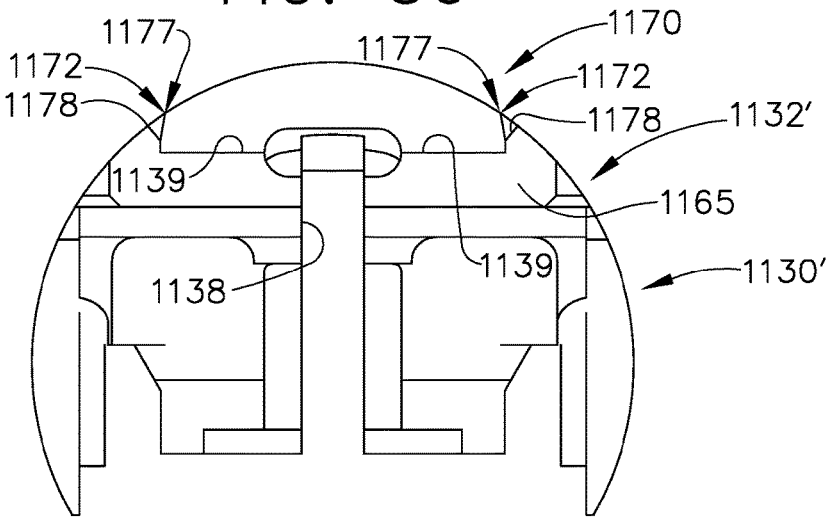

FIG. 27

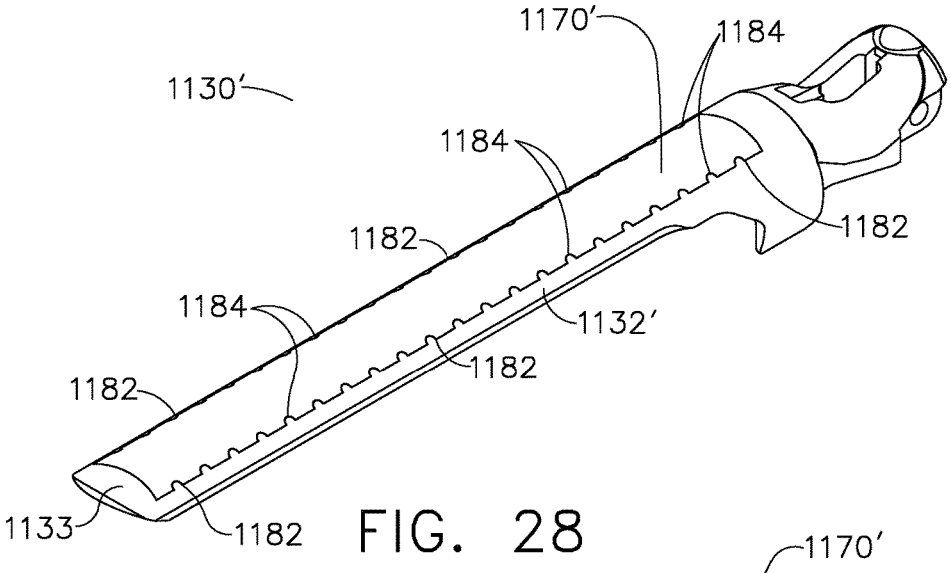
1170′
1184
1130′
1184
1182
1182
1184
1132′
1182
1182
1133
1182

FIG. 28

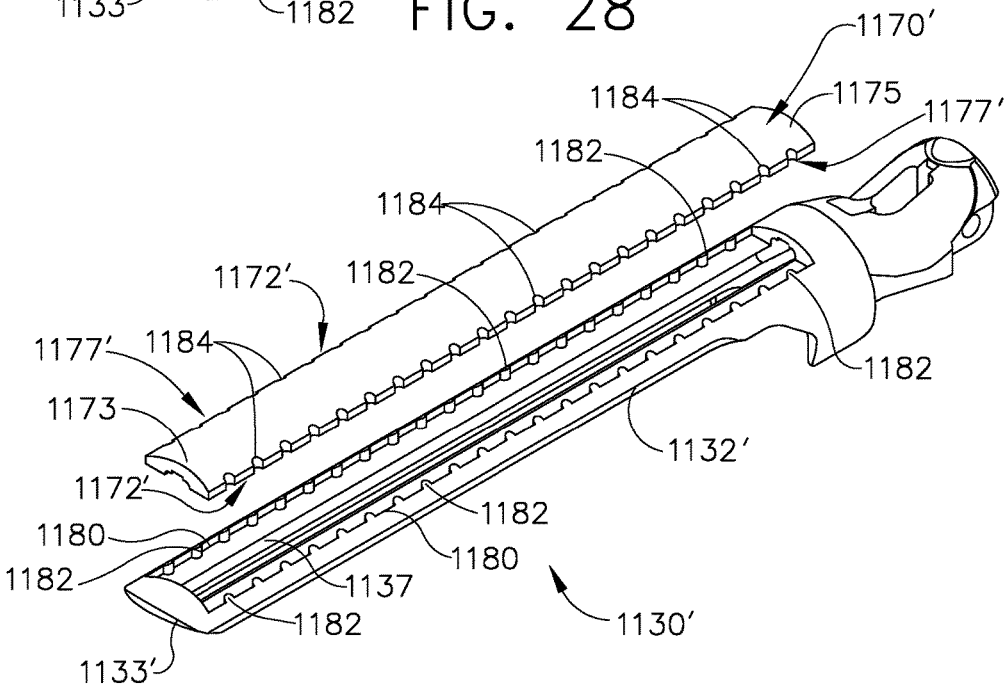
1170′
1184
1175
1177′
1182
1184
1172′
1182
1177′
1184
1182
1173
1132′
1172′
1182
1180
1180
1182
1137
1182
1130′
1133′

FIG. 29

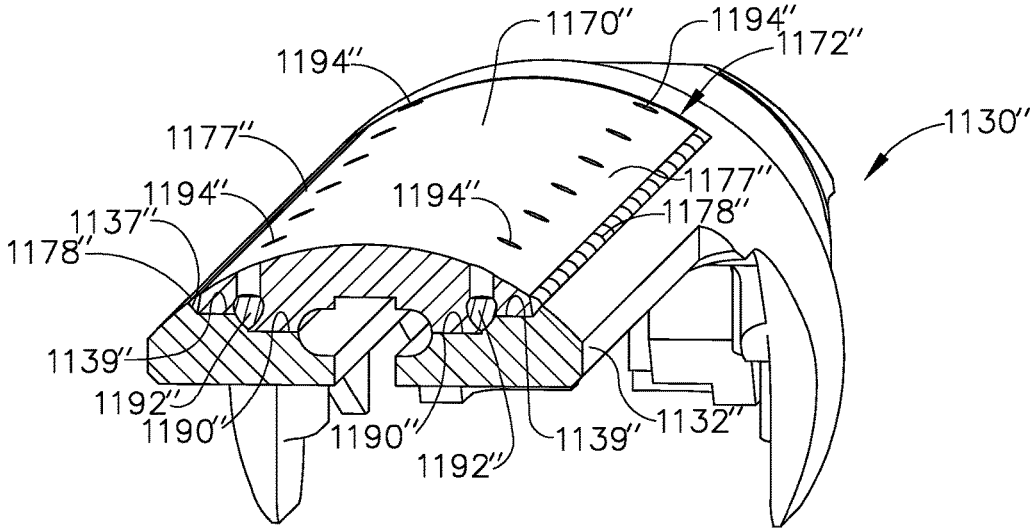
1170''
1194''
1172''
1194''
1130''
1177''
1177''
1194''
1194''
1178''
1137''
1178''
1139''
1192''
1190''
1190''
1192''
1139''
1132''

FIG. 32

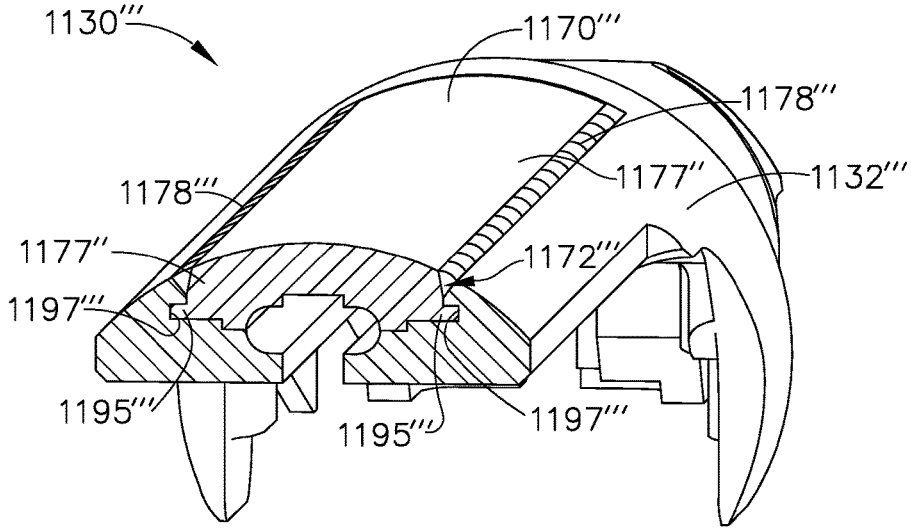
1130'''
1170'''
1178'''
1177''
1132'''
1178'''
1177''
1172'''
1197'''
1195'''
1195'''
1197'''

FIG. 33

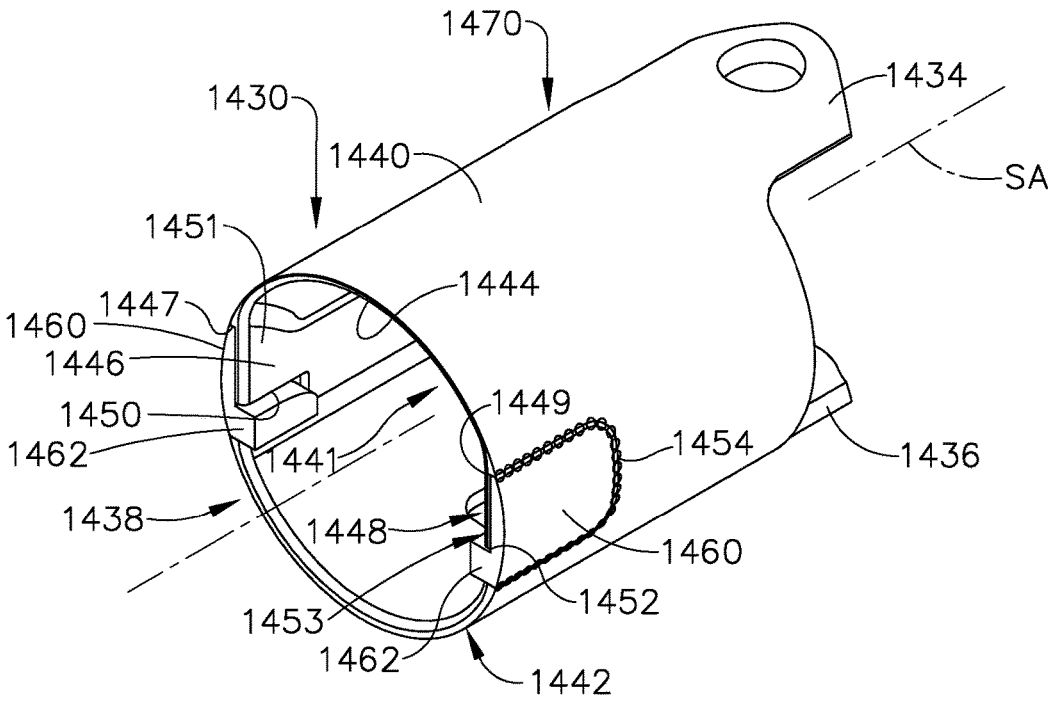
1470
1430
1440
1434
SA
1451
1444
1447
1460
1446
1450
1449
1462
1441
1454
1436
1438
1448
1460
1452
1453
1462
1442

FIG. 34

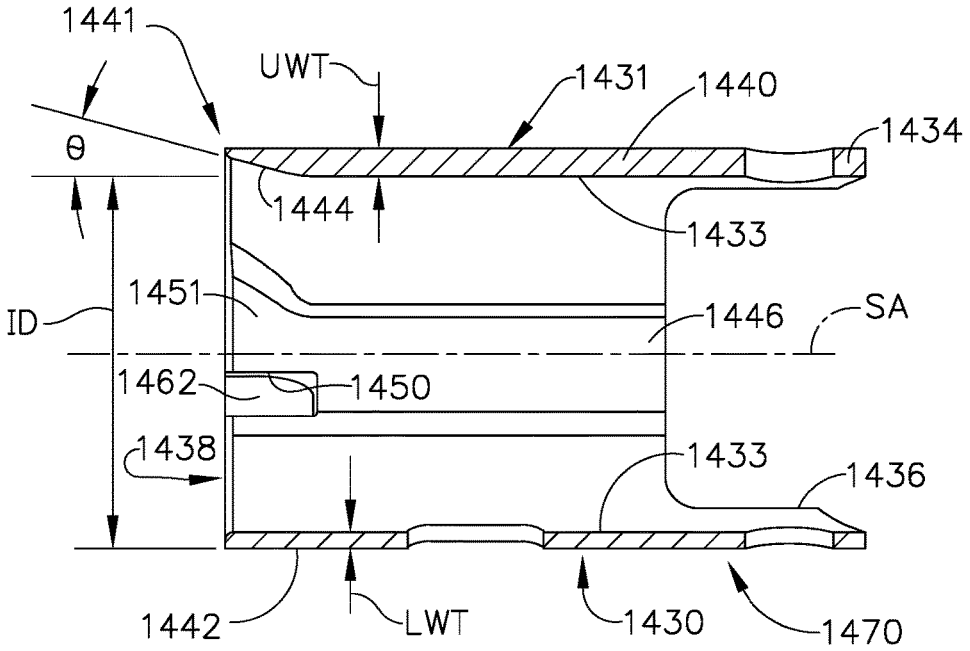
1441
UWT
1431
1440
1434
θ
1444
1433
1451
1446
SA
ID
1462
1450
1438
1433
1436
1442
LWT
1430
1470

FIG. 35

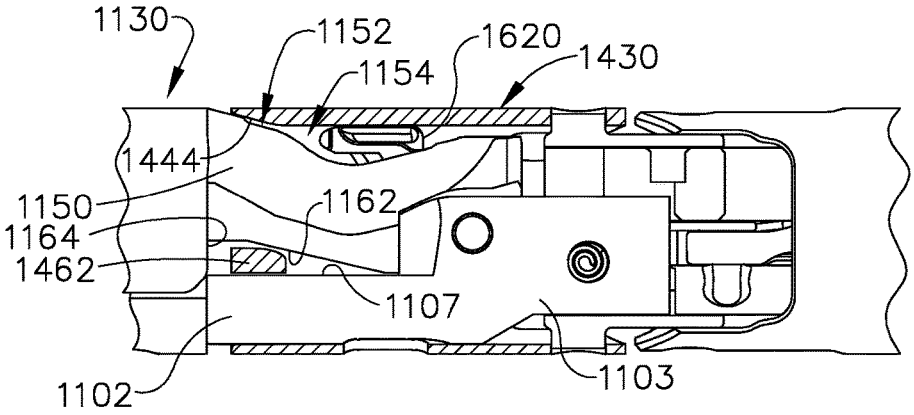

FIG. 36

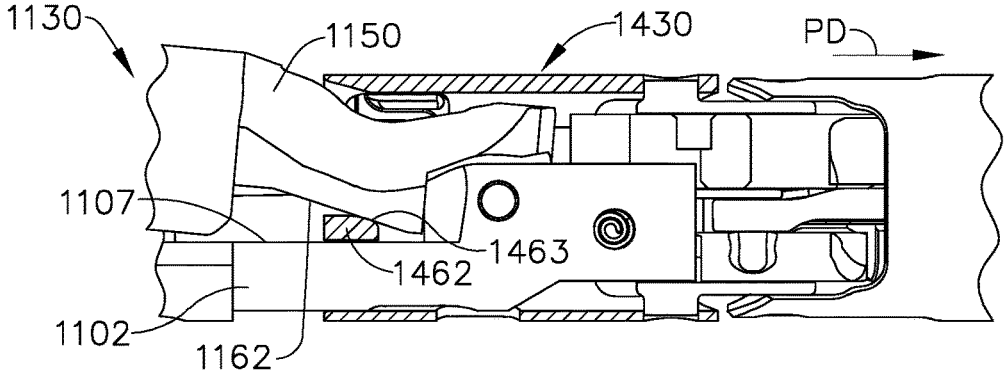

FIG. 37

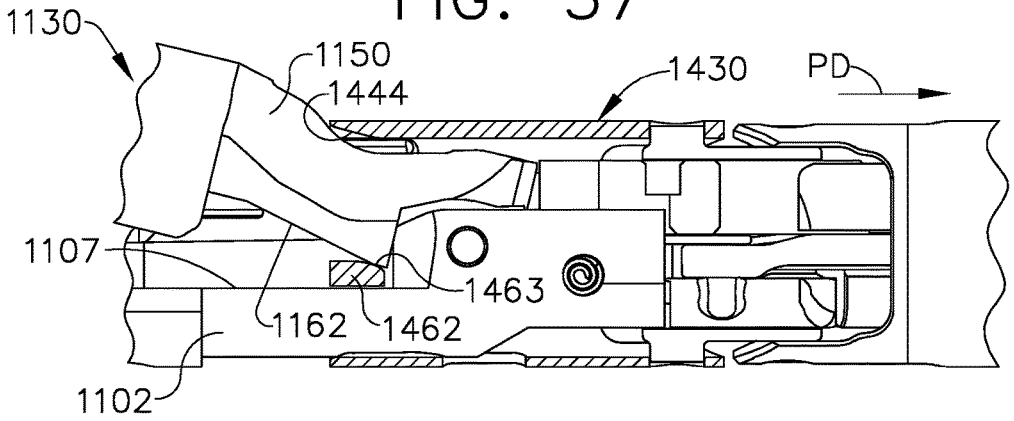

FIG. 38

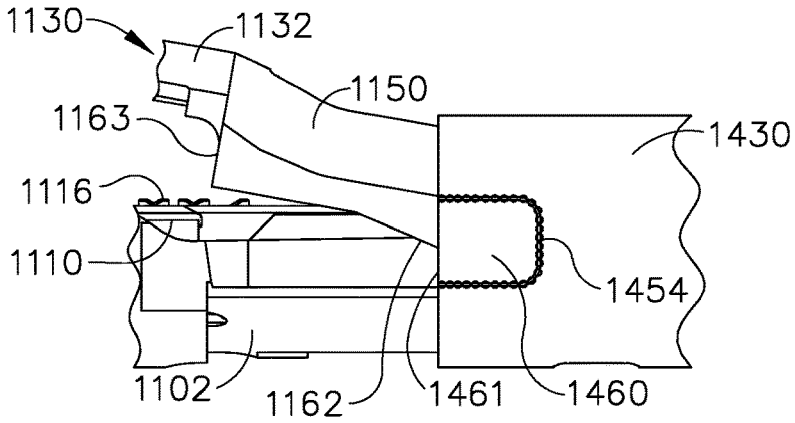

FIG. 41

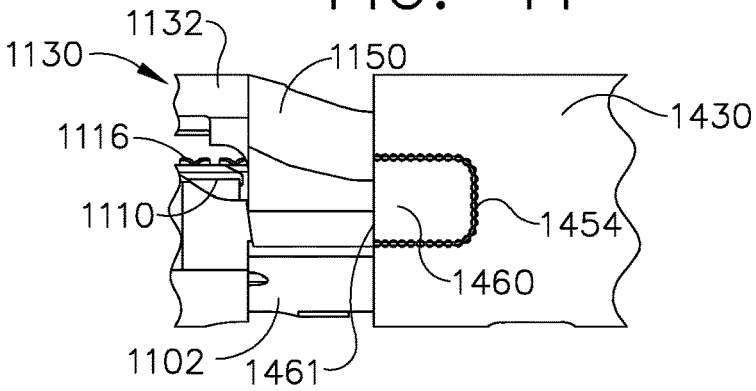

FIG. 40

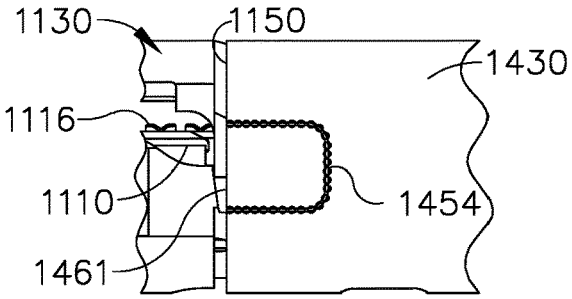

FIG. 39

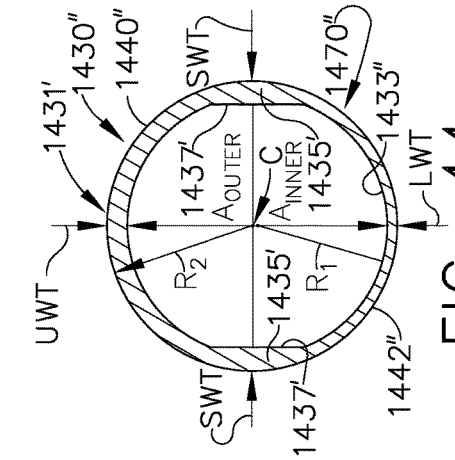

FIG. 44

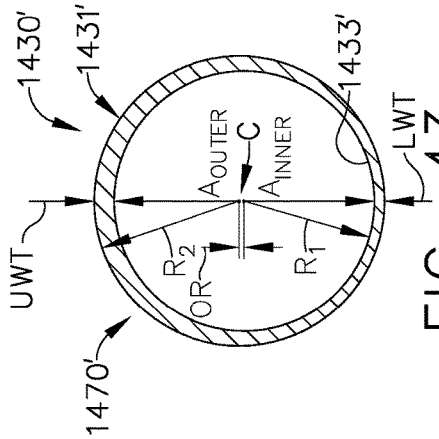

FIG. 43

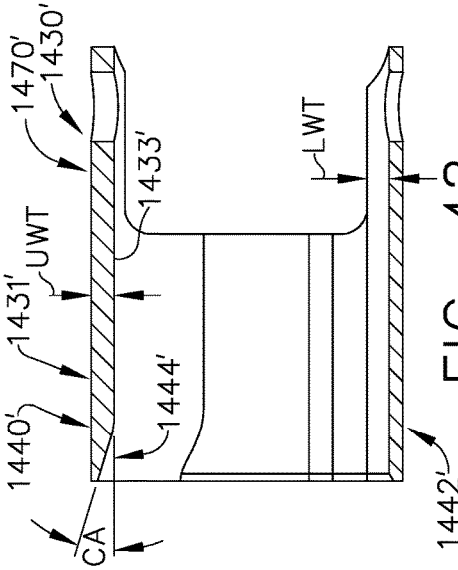

FIG. 42

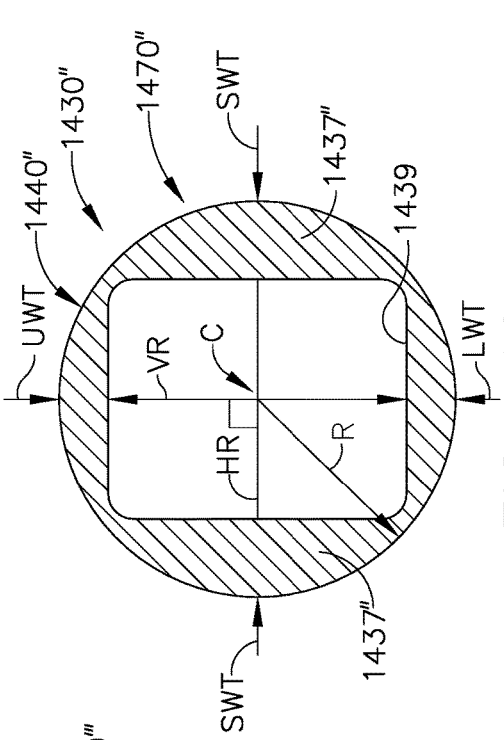

FIG. 46

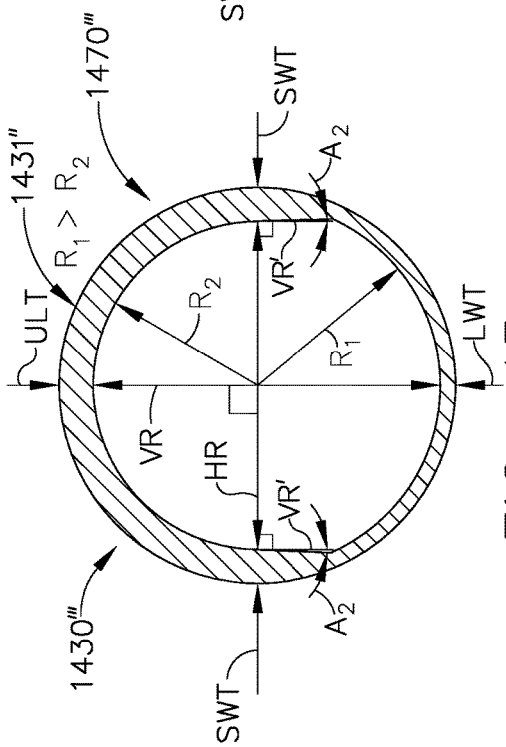

FIG. 45

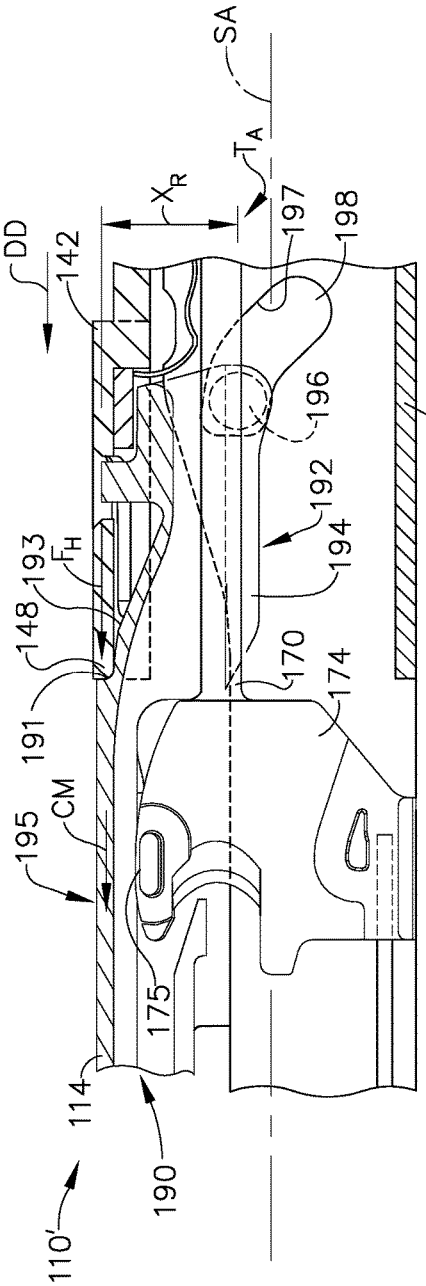
SA
T_A
X_R
DD
142
197
198
196
112
192
194
193
F_H
148
170
174
191
195
CM
175
114
190
110'

FIG. 47

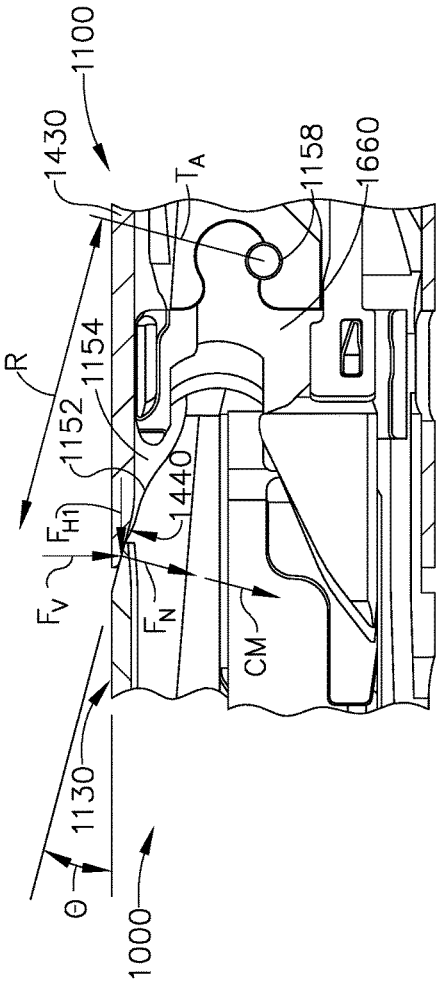
1100
1430
T_A
1158
1660
R
1154
1152
1440
F_{H1}
F_V
F_N
CM
1130
Θ
1000

FIG. 48

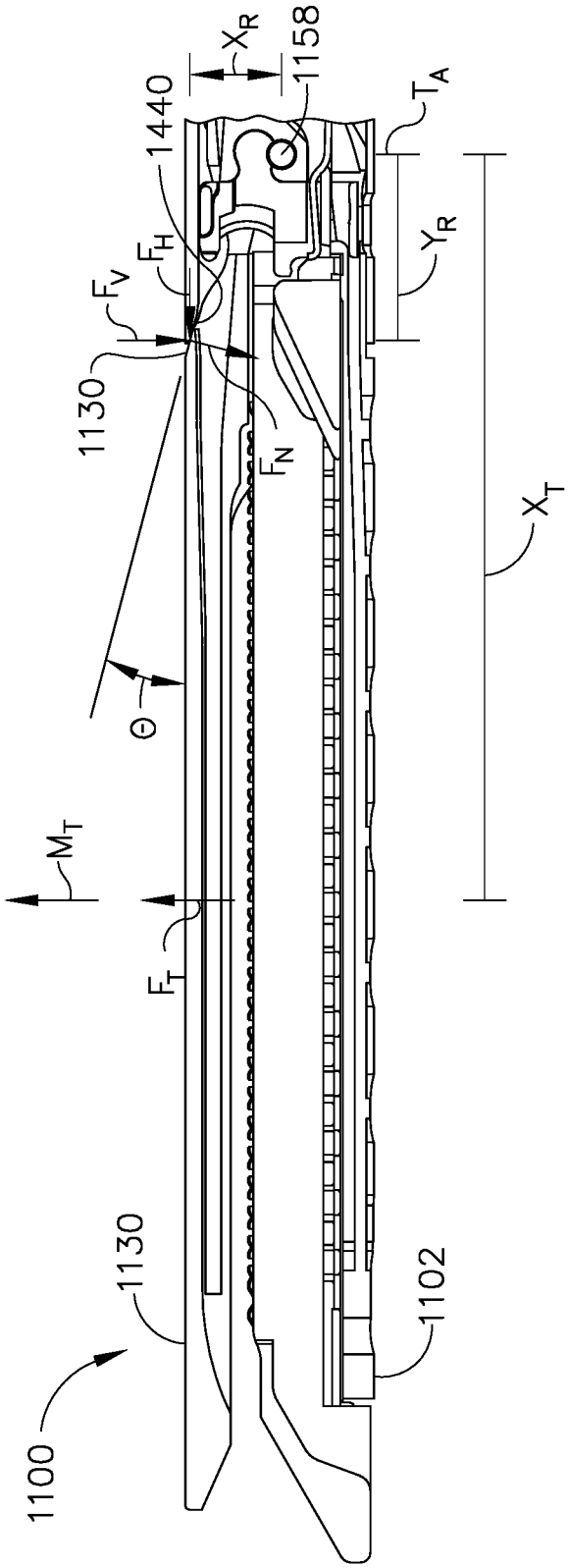

FIG. 49

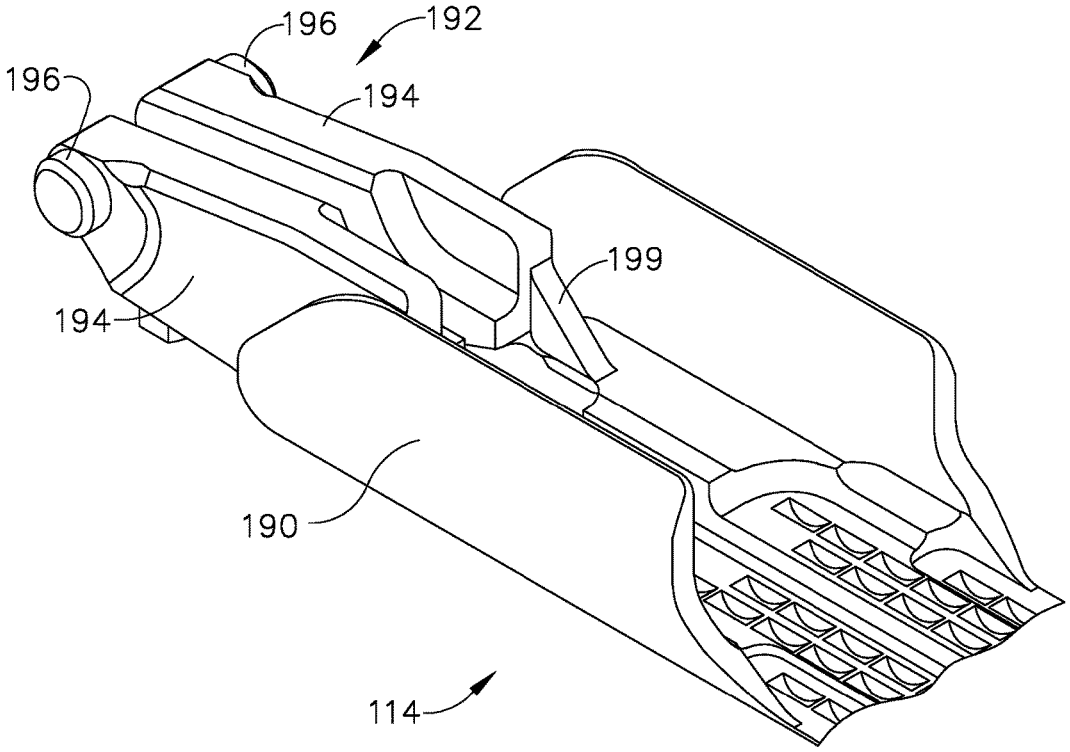

FIG. 50

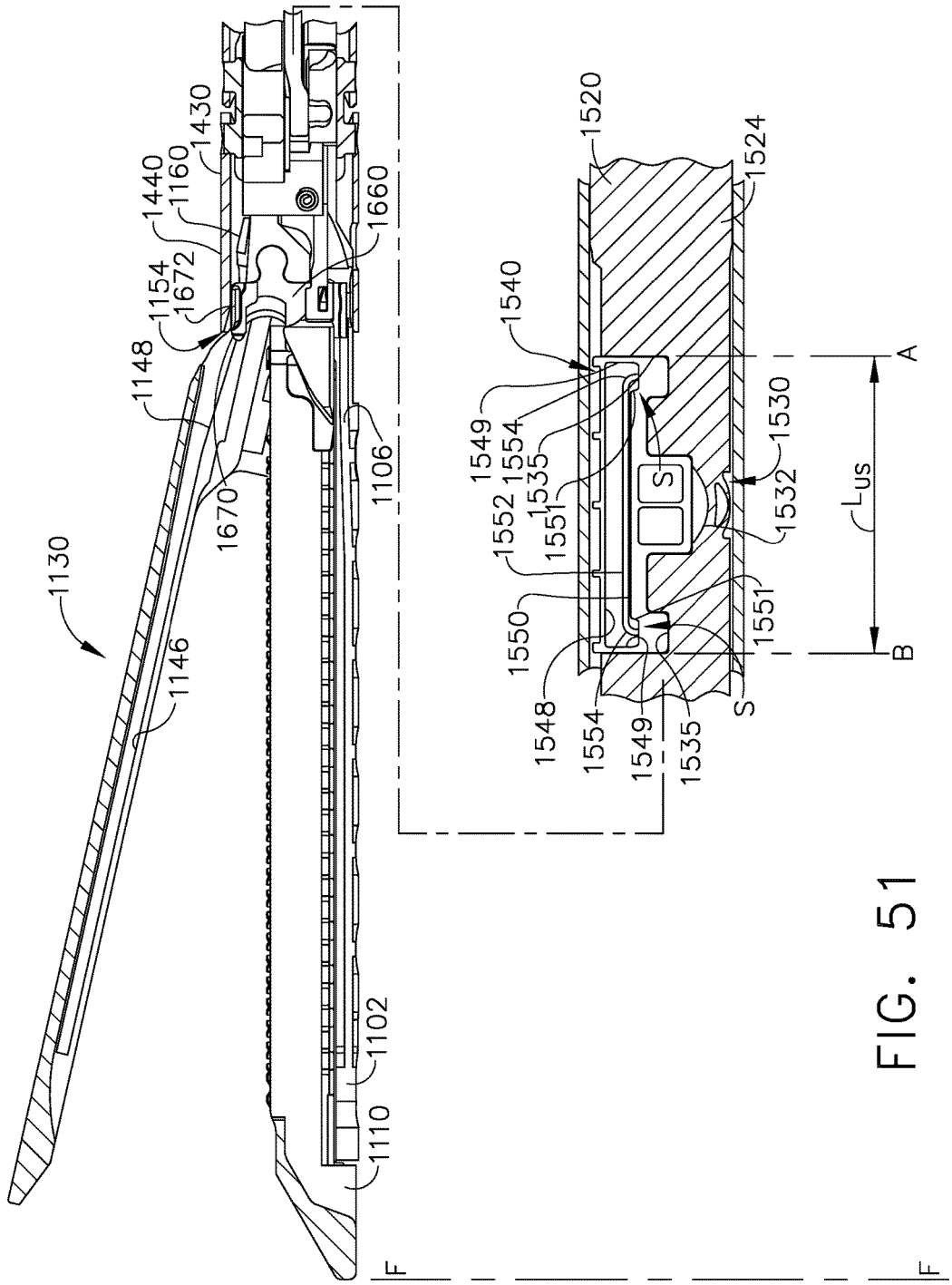
1130
1146
1148
1670
1154
1672
1440
1160
1430
1660
1106
1102
1110
F
F
1520
1524
1540
1549
1554
1535
1552
1551
1530
1532
1550
1548
1554
1549
1535
S
S
1551
A
B
L_{US}

FIG. 51

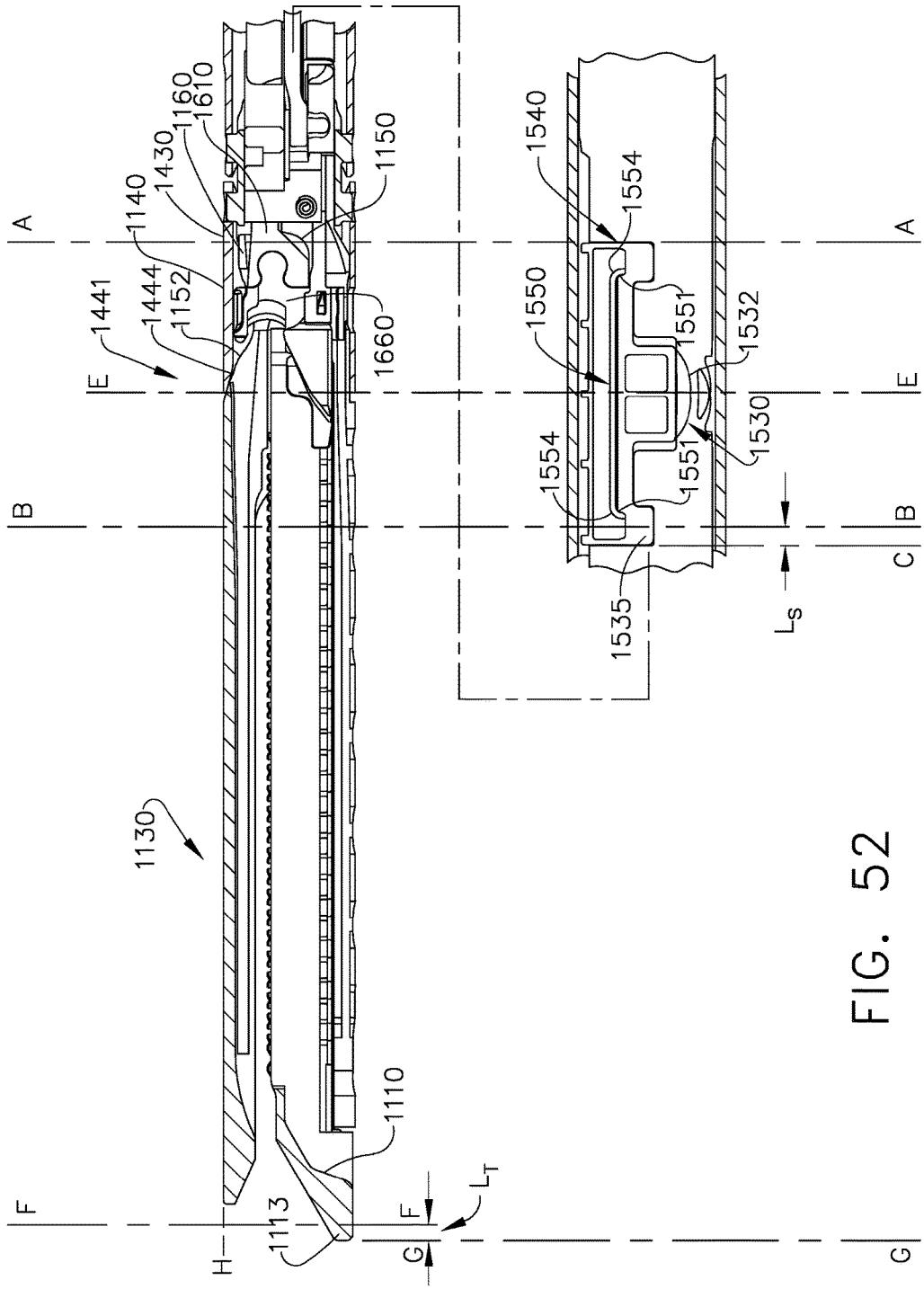
1160
1610
1430
1140
1441
1444
1152
1150
1660
1540
1554
1550
1551
1532
1530
1554
1551
1535
L_S
A
A
E
E
B
B
C
1130
1110
1113
F
F
H
G
G
L_T

FIG. 52

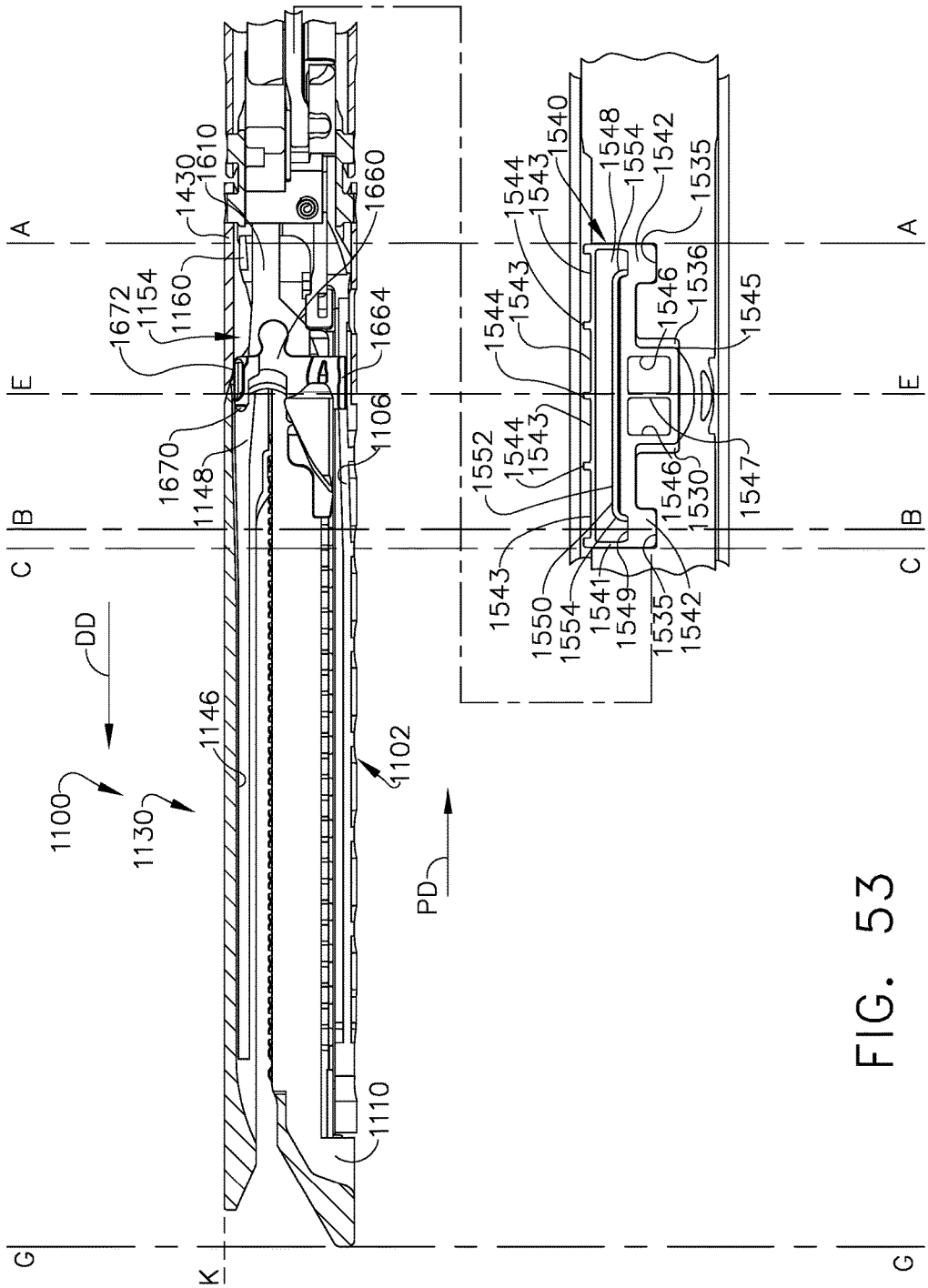
1430
1610
1660
1672
1154
1160
1664
1670
1148
1106
1146
1100
1130
DD
1102
PD
1110
1540
1548
1554
1542
1535
1544
1543
1546
1536
1545
1552
1547
1530
1550
1541
1549
A
B
C
E
G
K

FIG. 53

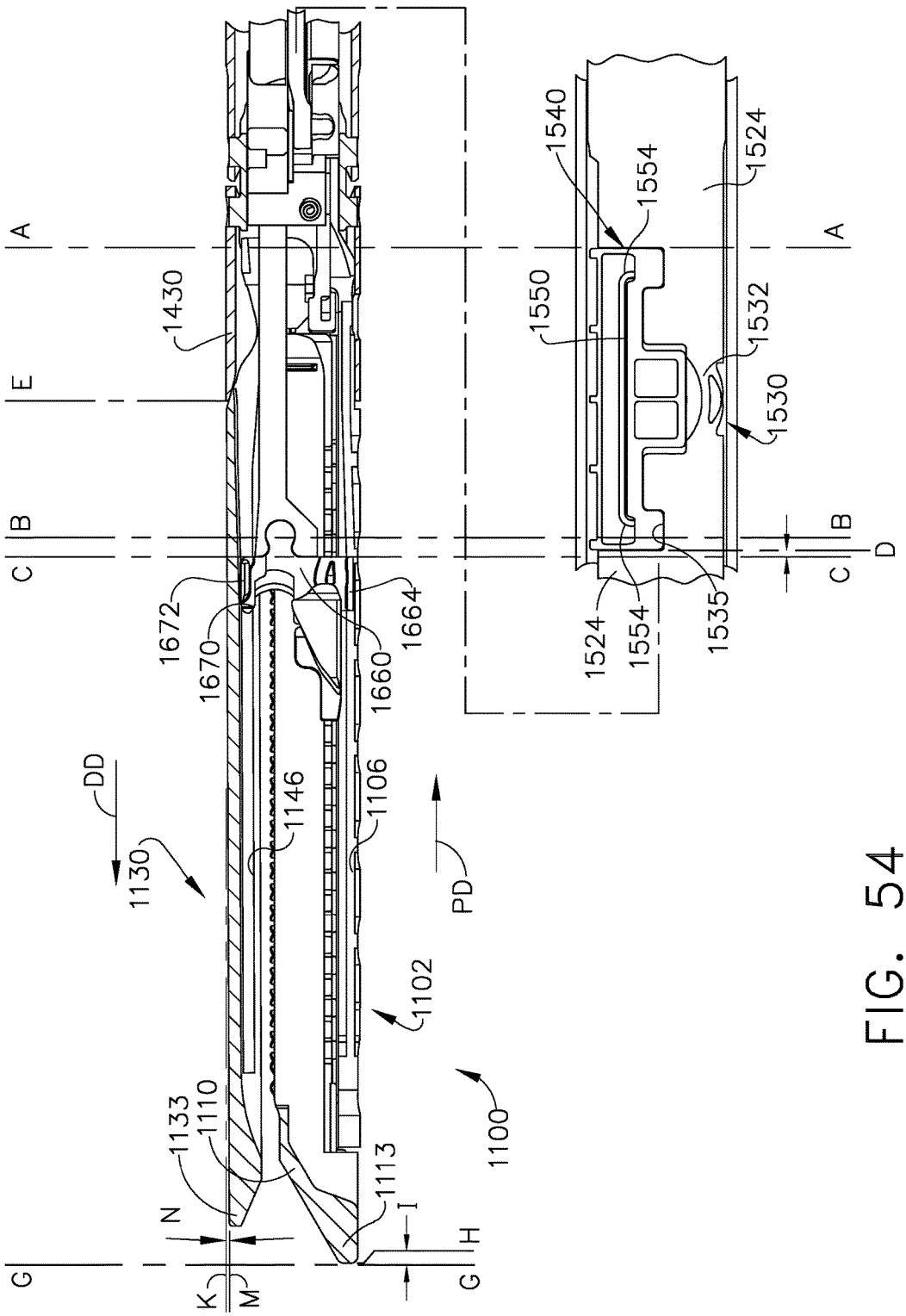
A
E
B
C
G
1430
1672
1670
1660
1664
DD
1130
1146
1106
PD
1102
1100
1133
1110
1113
N
K
M
I
H
1540
1554
1524
1550
1532
1530
1535
D

FIG. 54

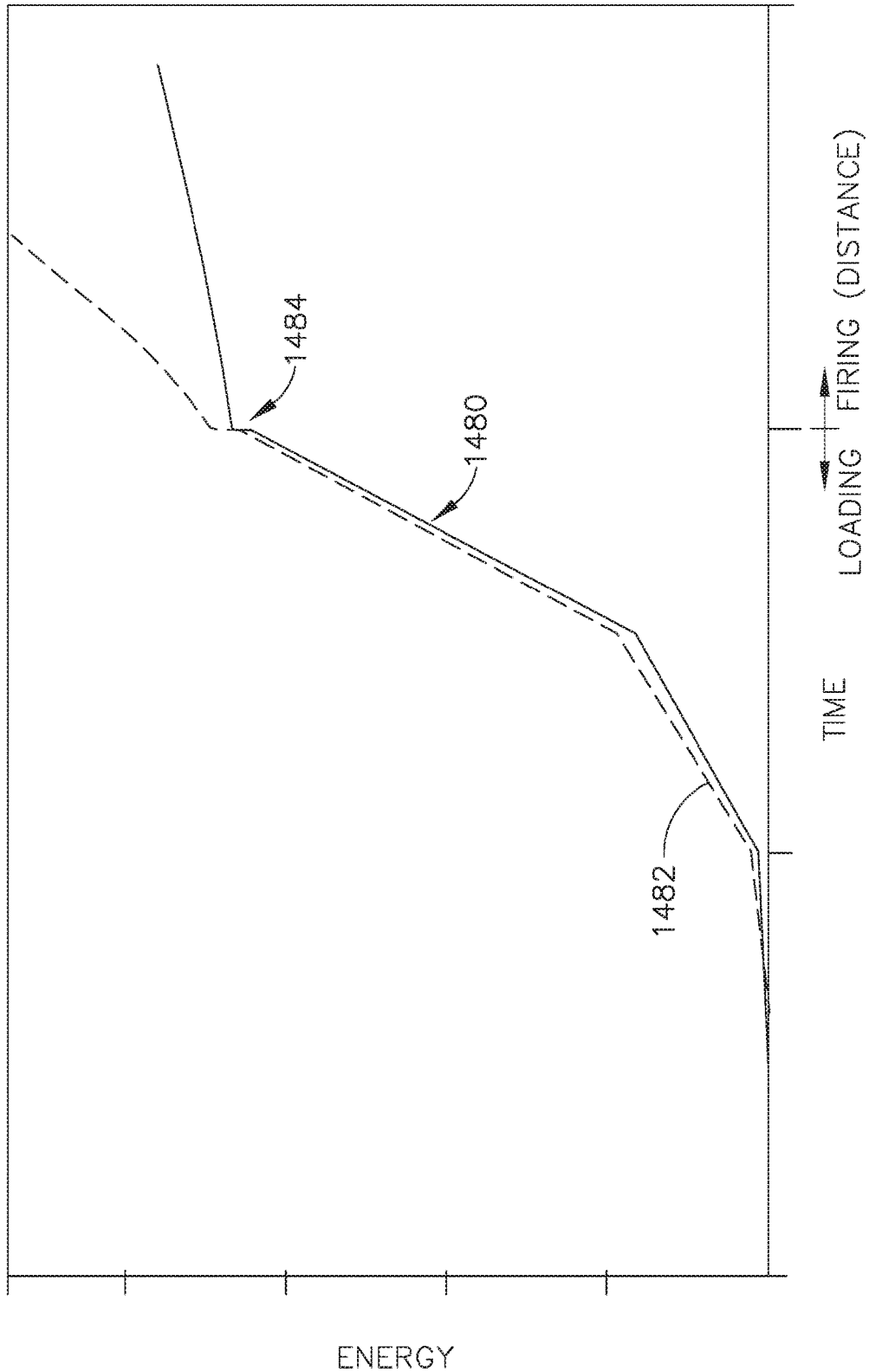

FIG. 55

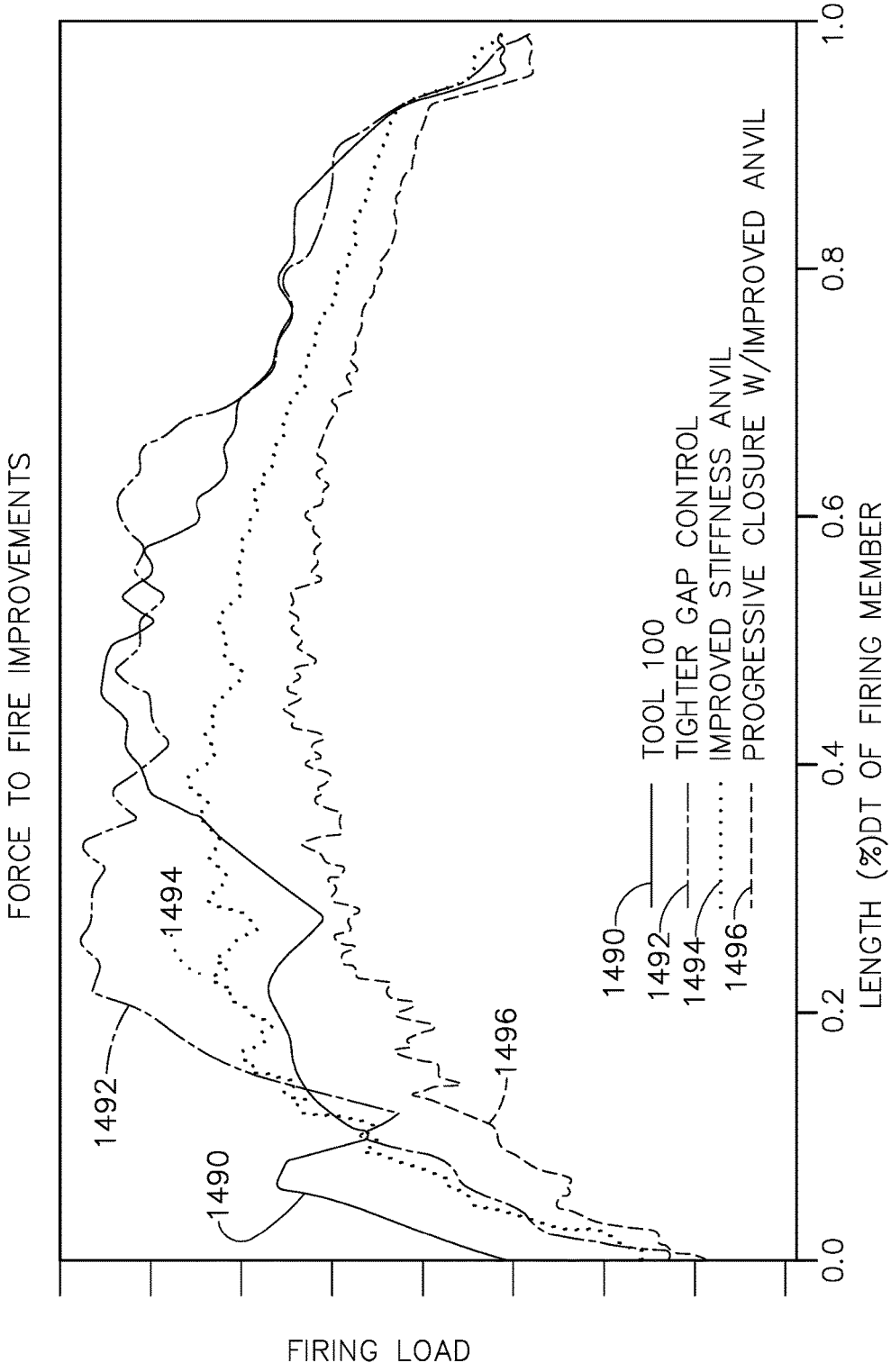
FORCE TO FIRE IMPROVEMENTS
FIRING LOAD
LENGTH (%)DT OF FIRING MEMBER
0.0
0.2
0.4
0.6
0.8
1.0
1490
1492
1494
1496
1490 TOOL 100
1492 TIGHTER GAP CONTROL
1494 IMPROVED STIFFNESS ANVIL
1496 PROGRESSIVE CLOSURE W/IMPROVED ANVIL

FIG. 56

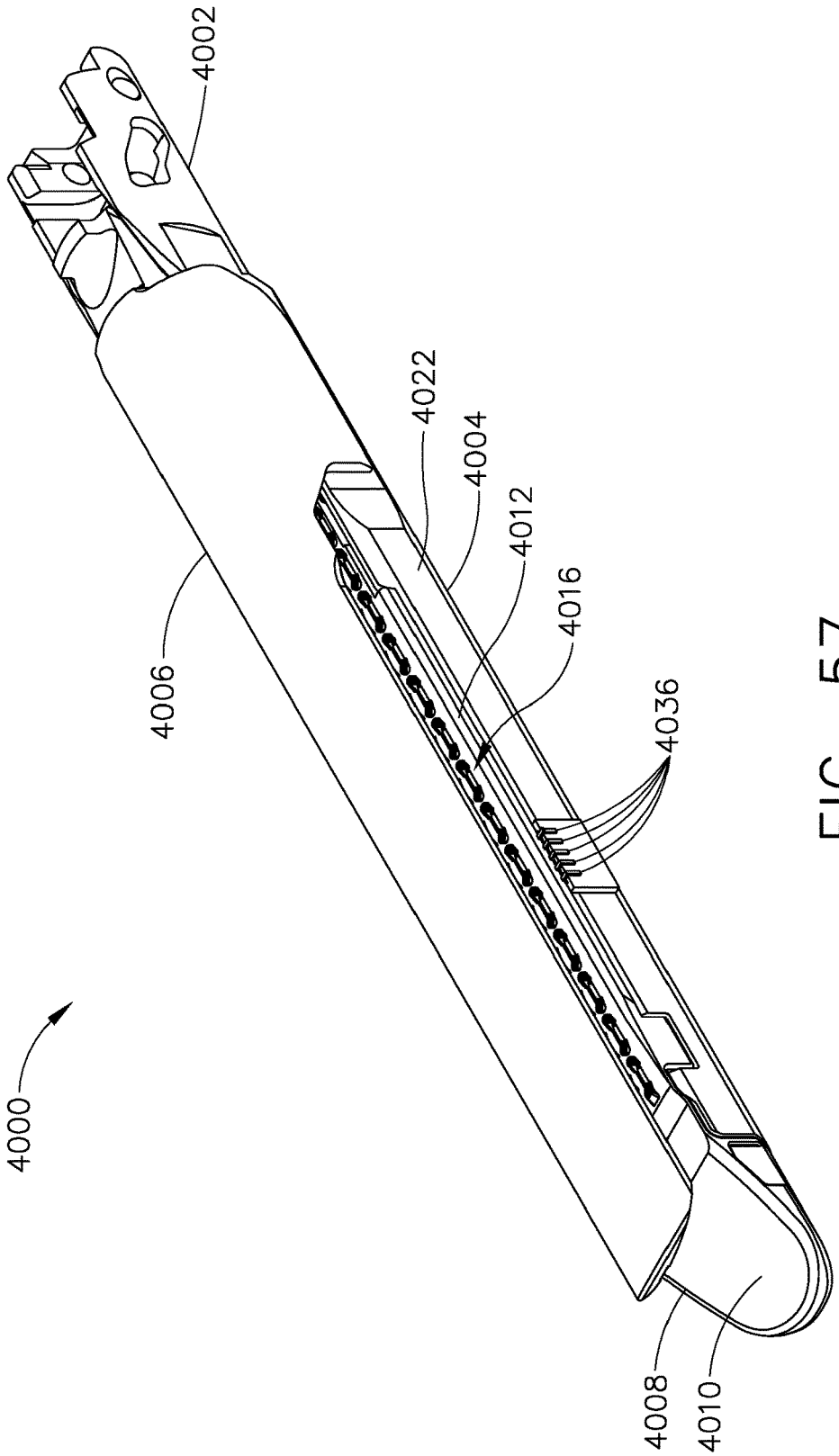

FIG. 57

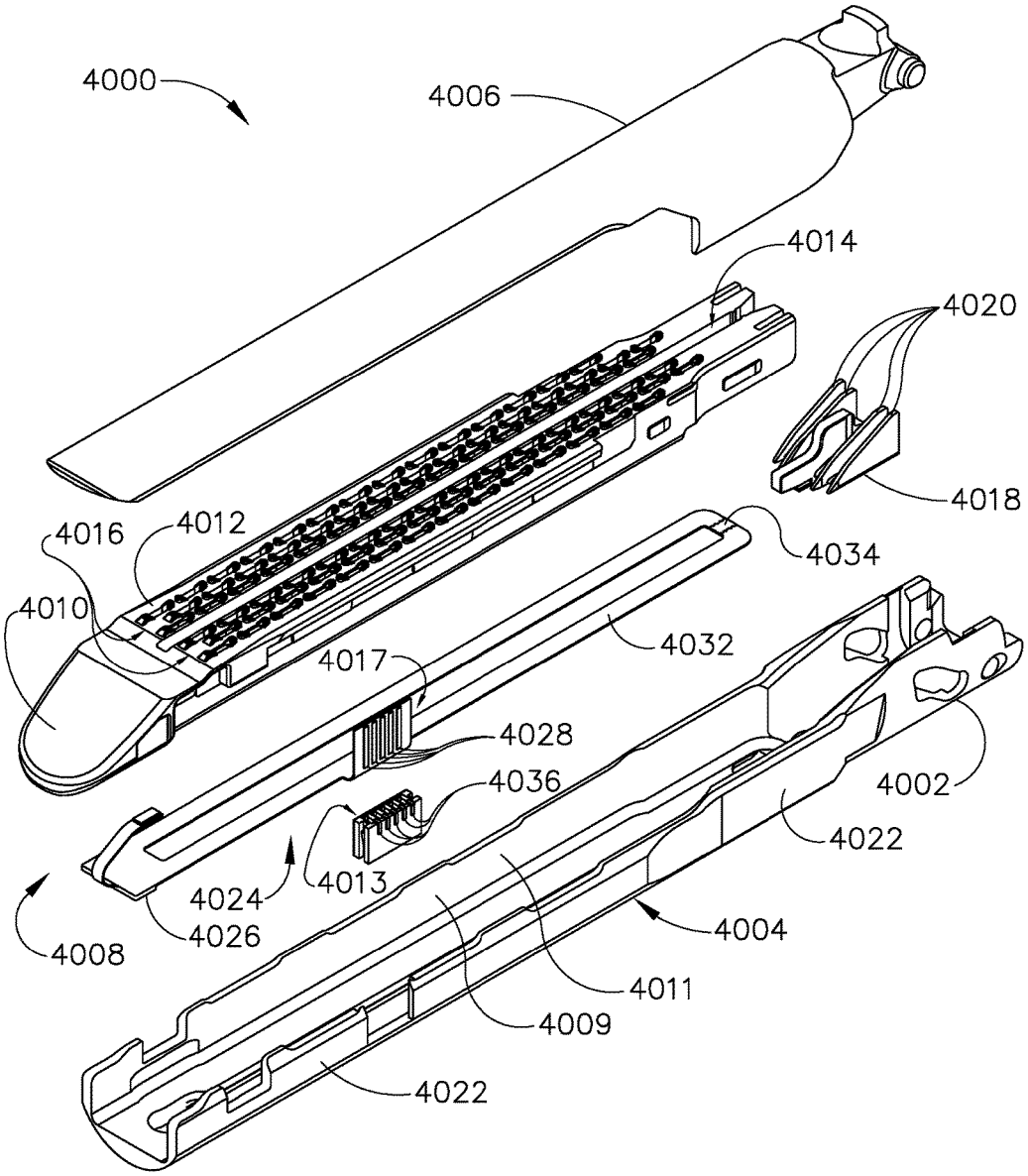
4000
4006
4014
4020
4018
4016
4012
4034
4010
4032
4017
4028
4036
4002
4022
4024
4013
4026
4008
4004
4011
4009
4022

FIG. 58

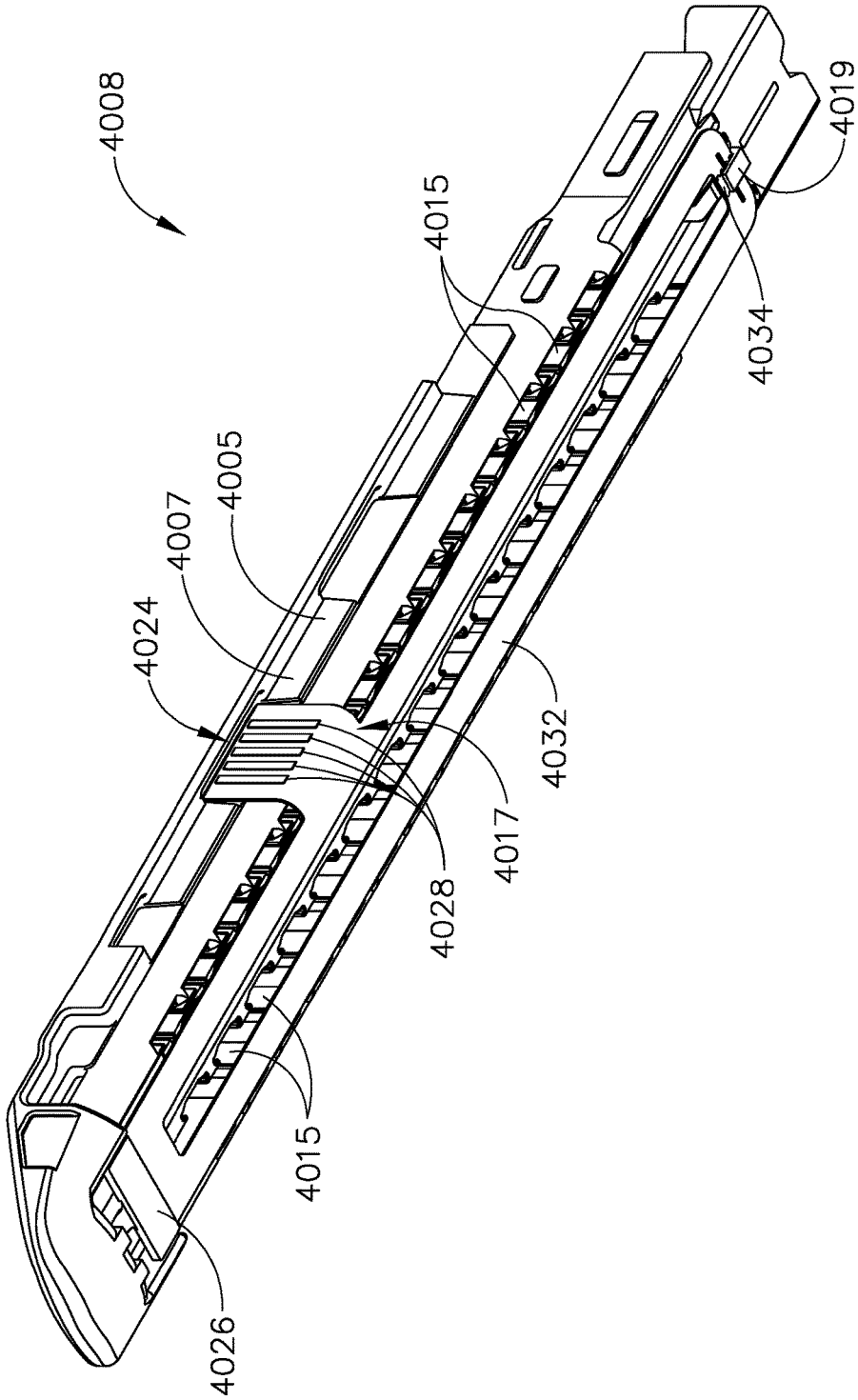

FIG. 59

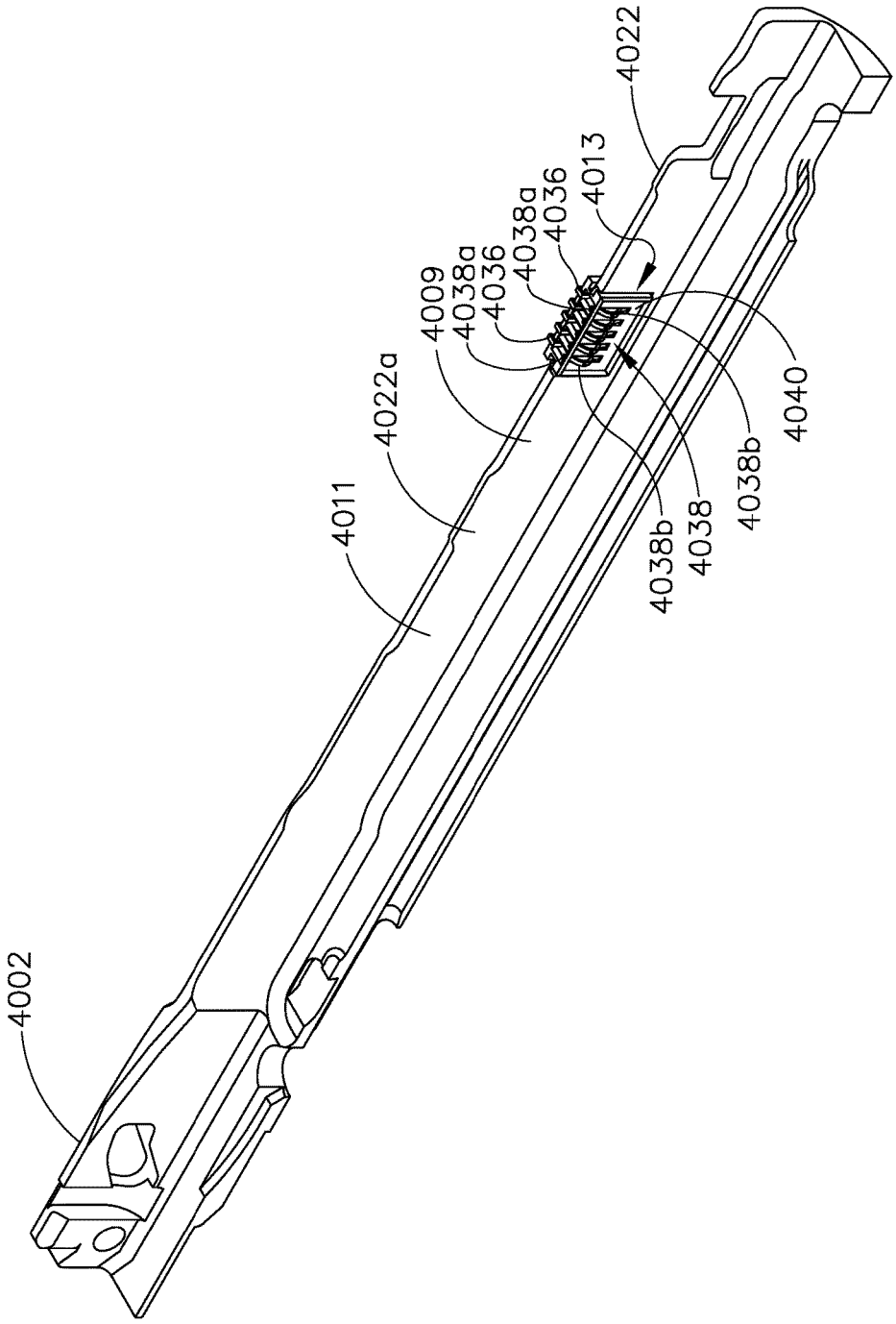
4002
4011
4022a
4009
4038a
4036
4038a
4036
4013
4022
4038b
4038
4038b
4040

FIG. 60

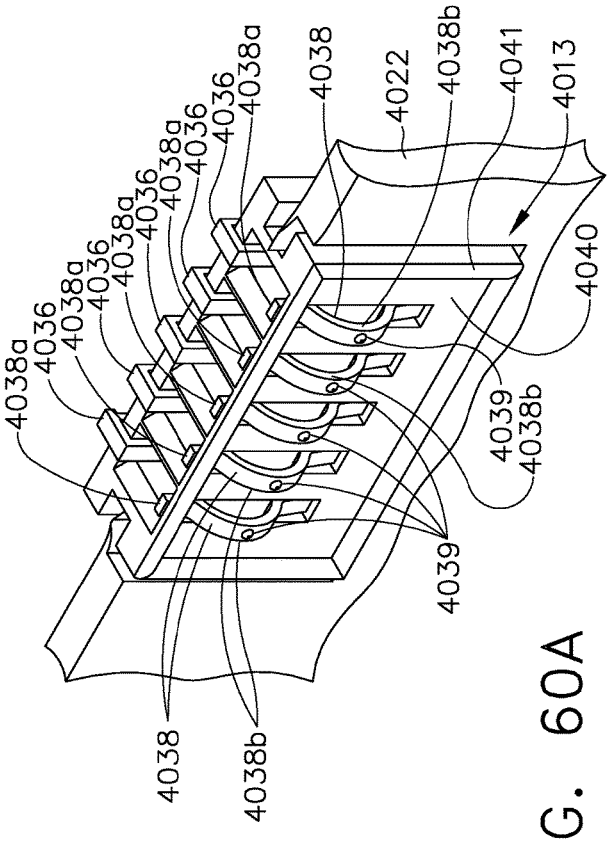

FIG. 60A

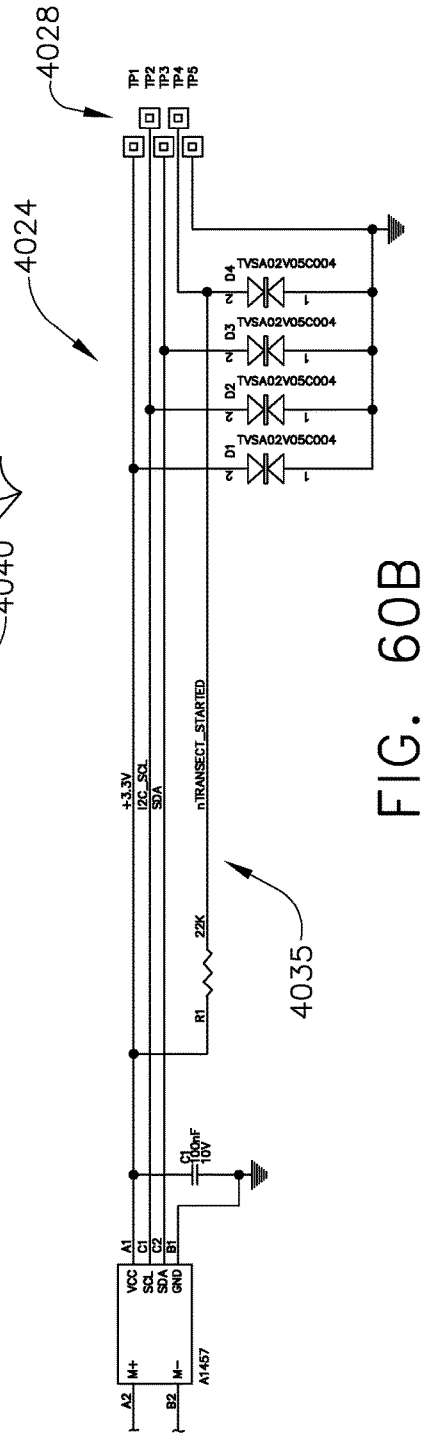

FIG. 60B

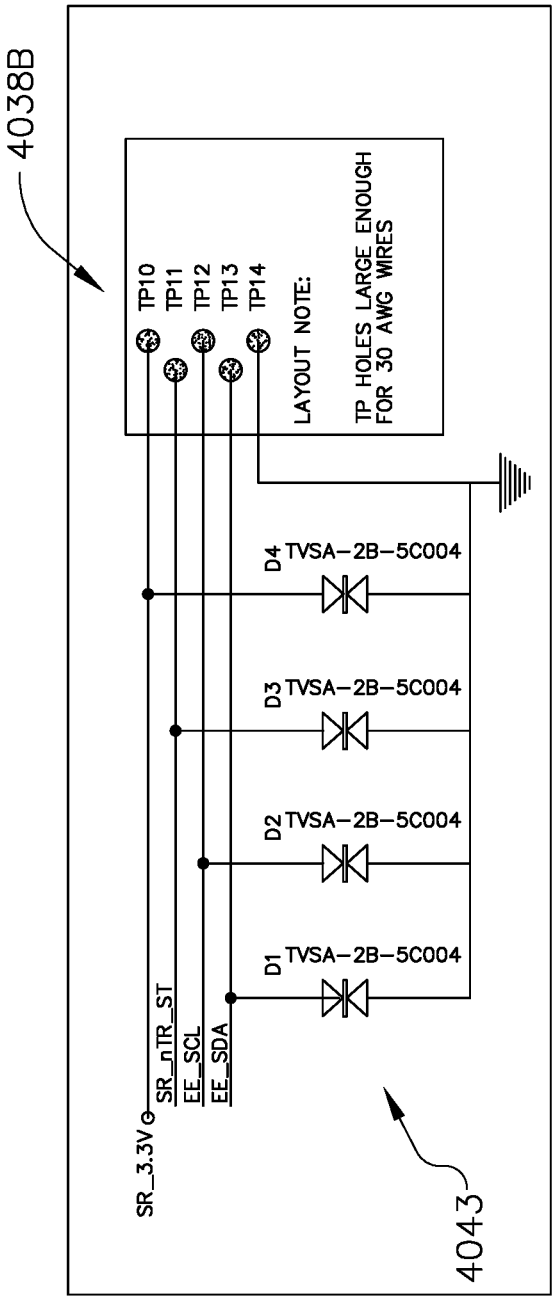
4038B
TP10
TP11
TP12
TP13
TP14
LAYOUT NOTE:
TP HOLES LARGE ENOUGH
FOR 30 AWG WIRES
D4 TVSA-2B-5C004
D3 TVSA-2B-5C004
D2 TVSA-2B-5C004
D1 TVSA-2B-5C004
SR_3.3V
SR_nTR_ST
EE_SCL
EE_SDA
4043

FIG. 60C

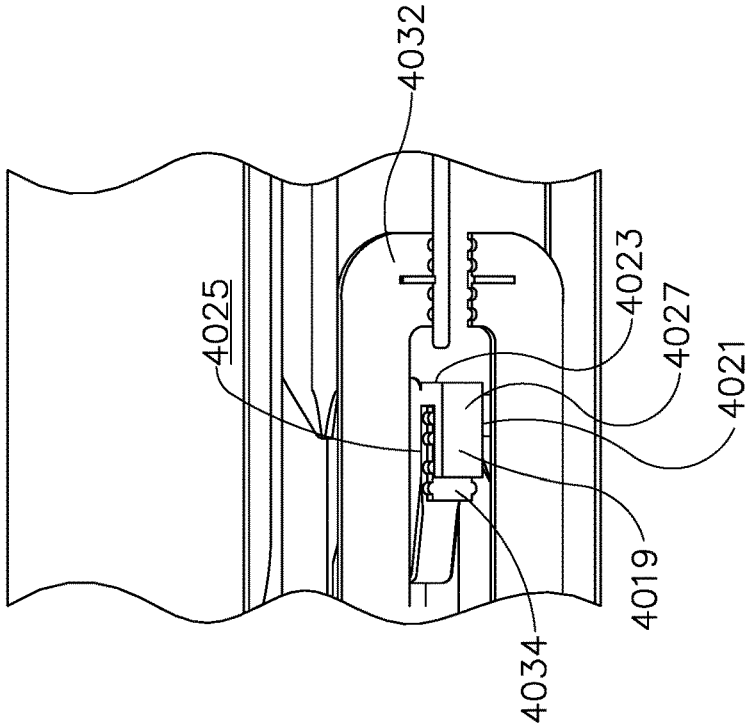
4032
4025
4023
4027
4021
4019
4034

FIG. 62

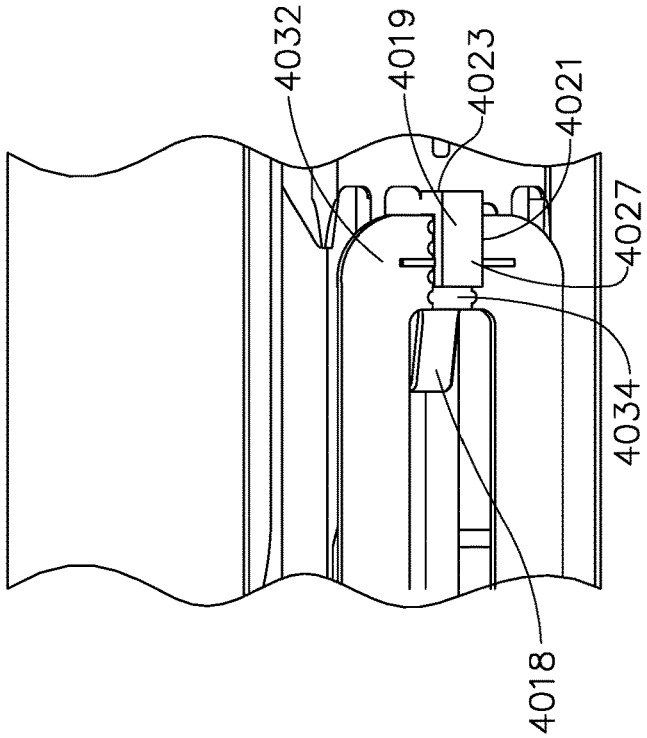
4032
4019
4023
4021
4027
4034
4018

FIG. 61

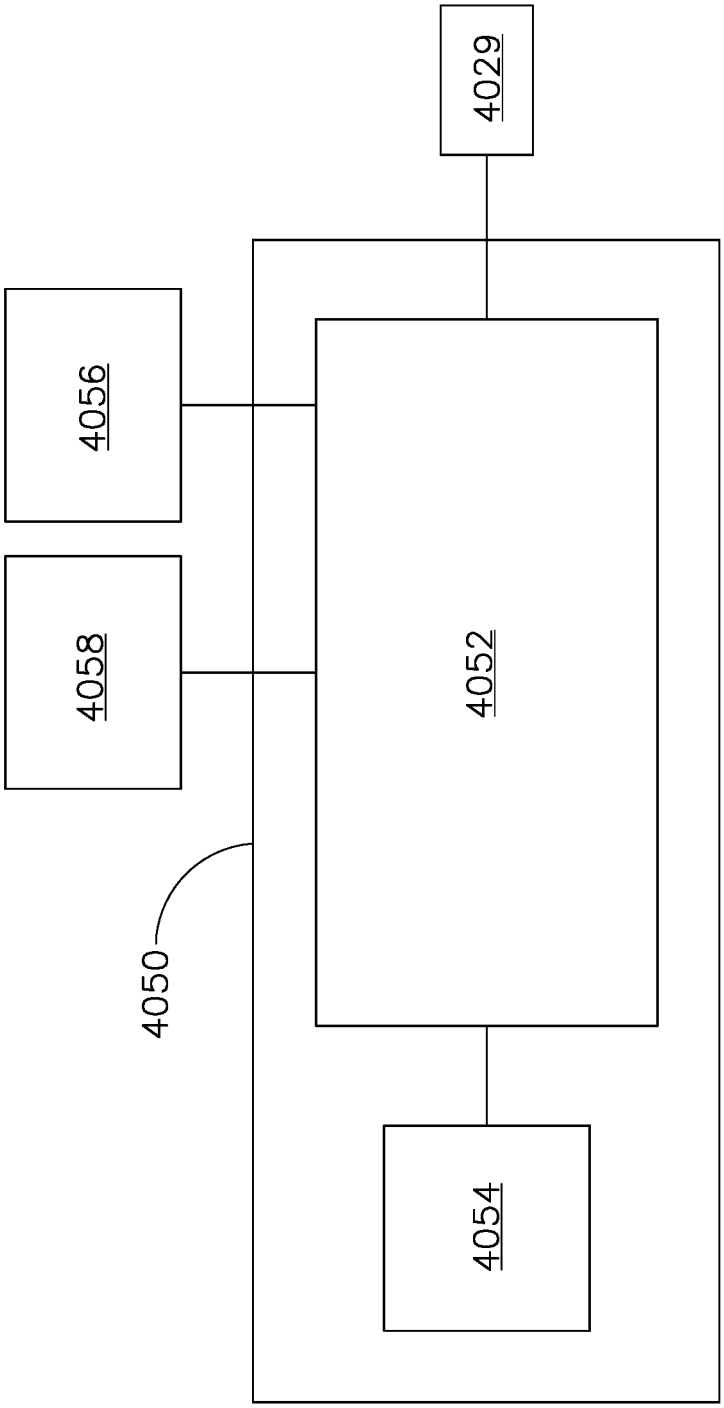

FIG. 62A

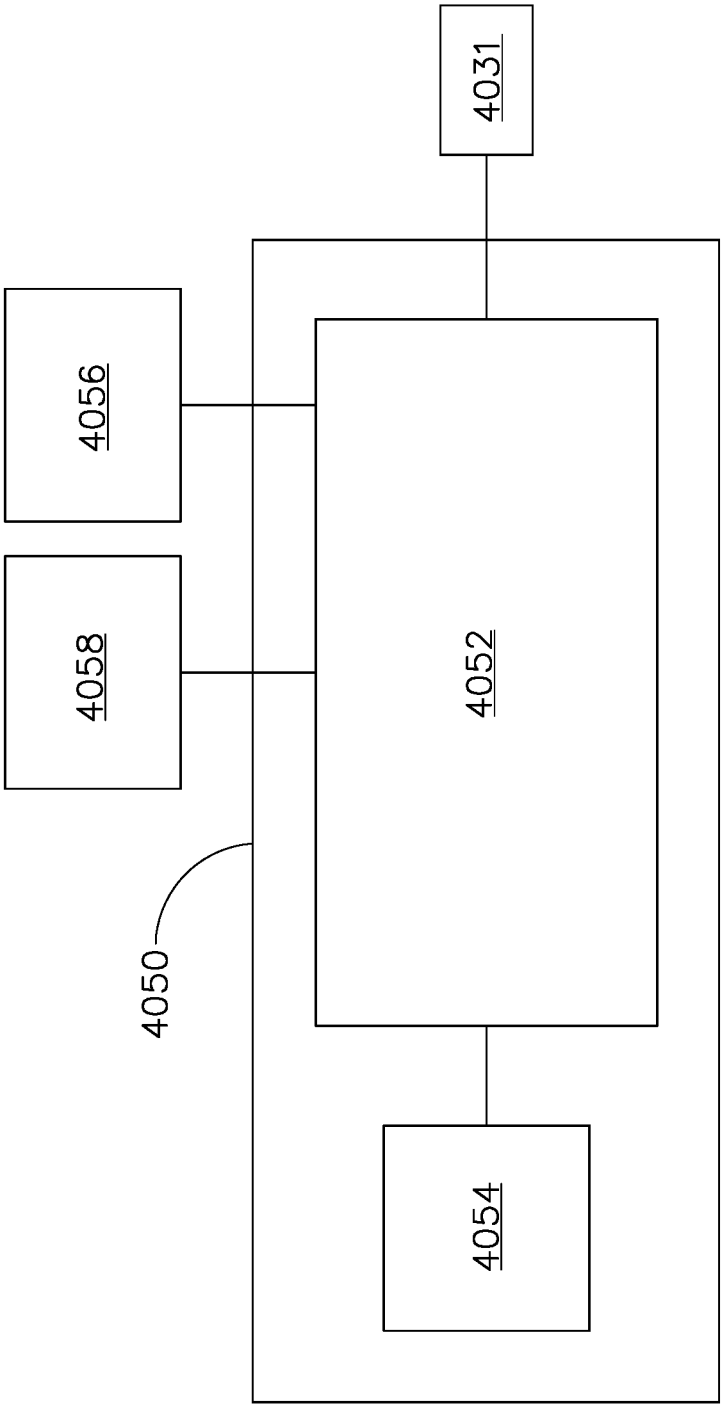

FIG. 62B

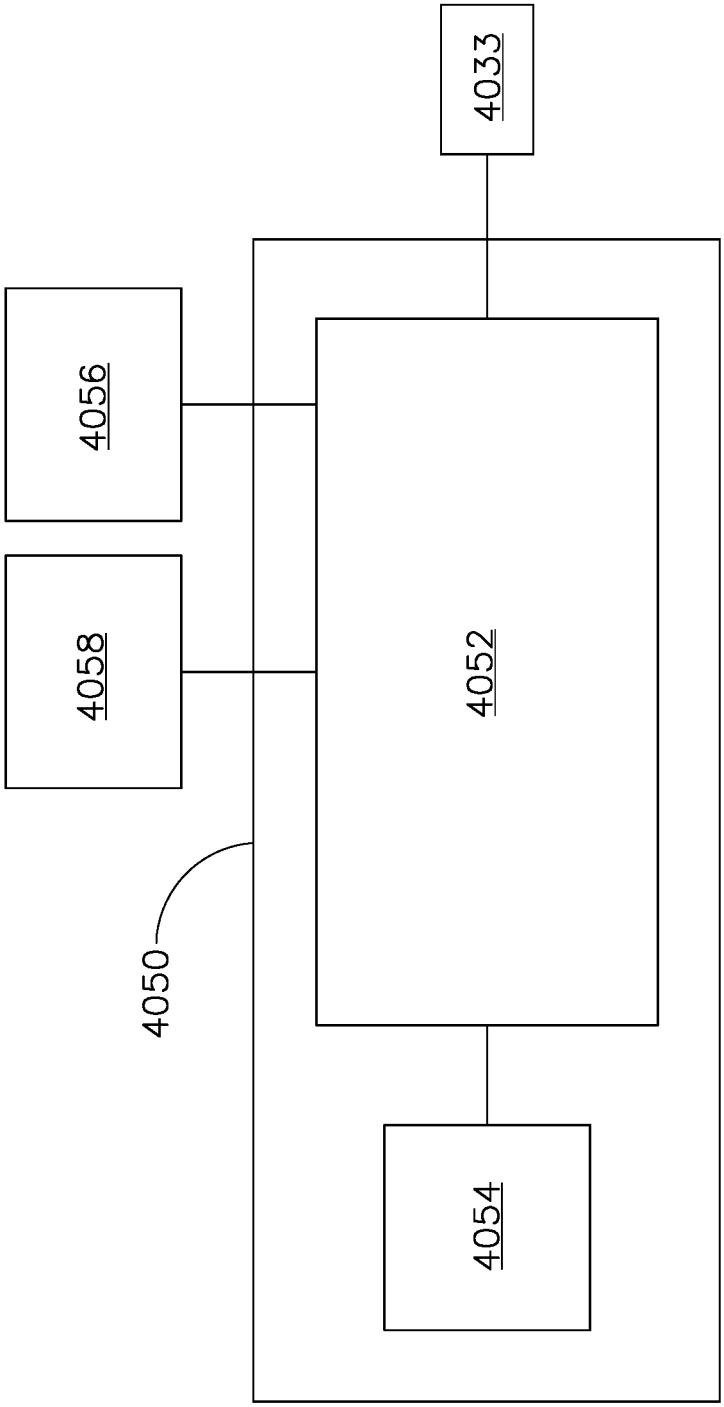

FIG. 62C

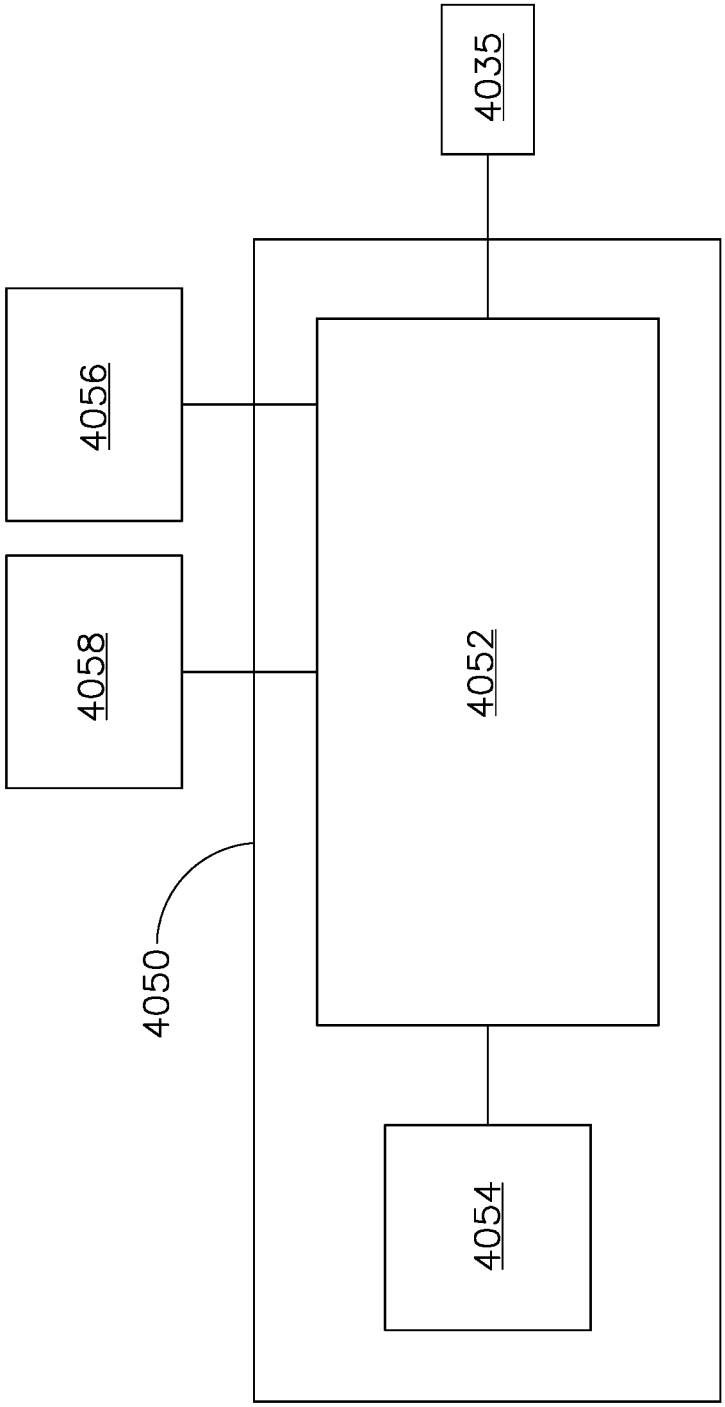

FIG. 62D

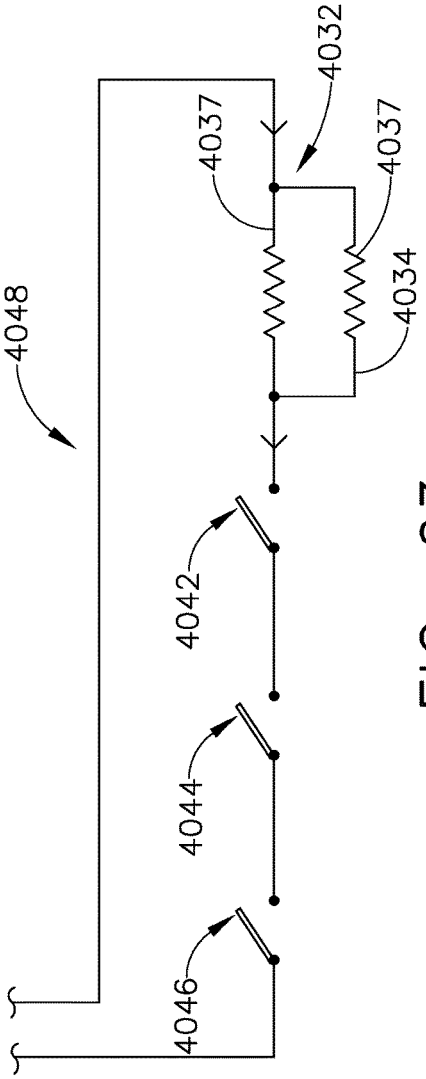

FIG. 63

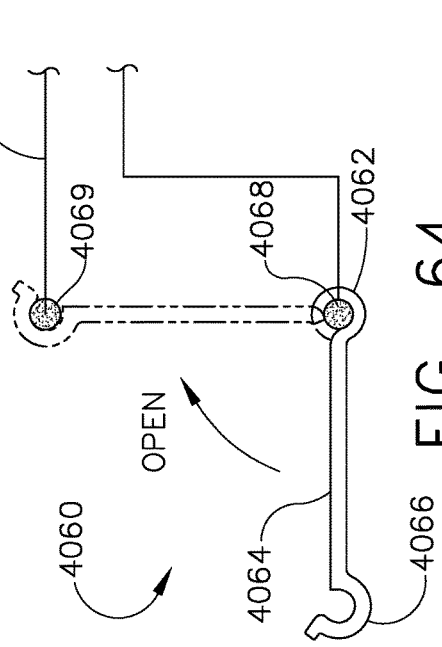

FIG. 64

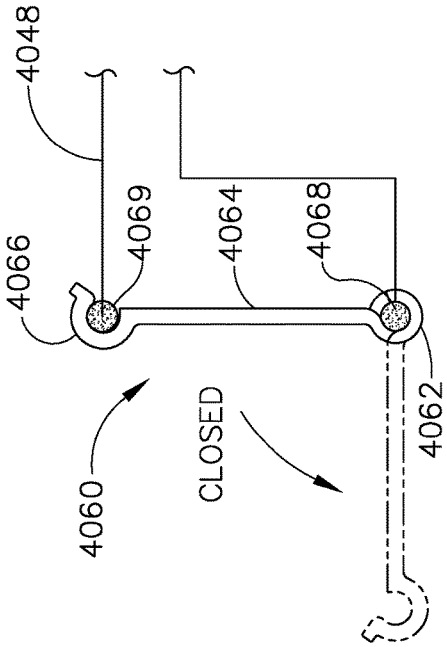

FIG. 65

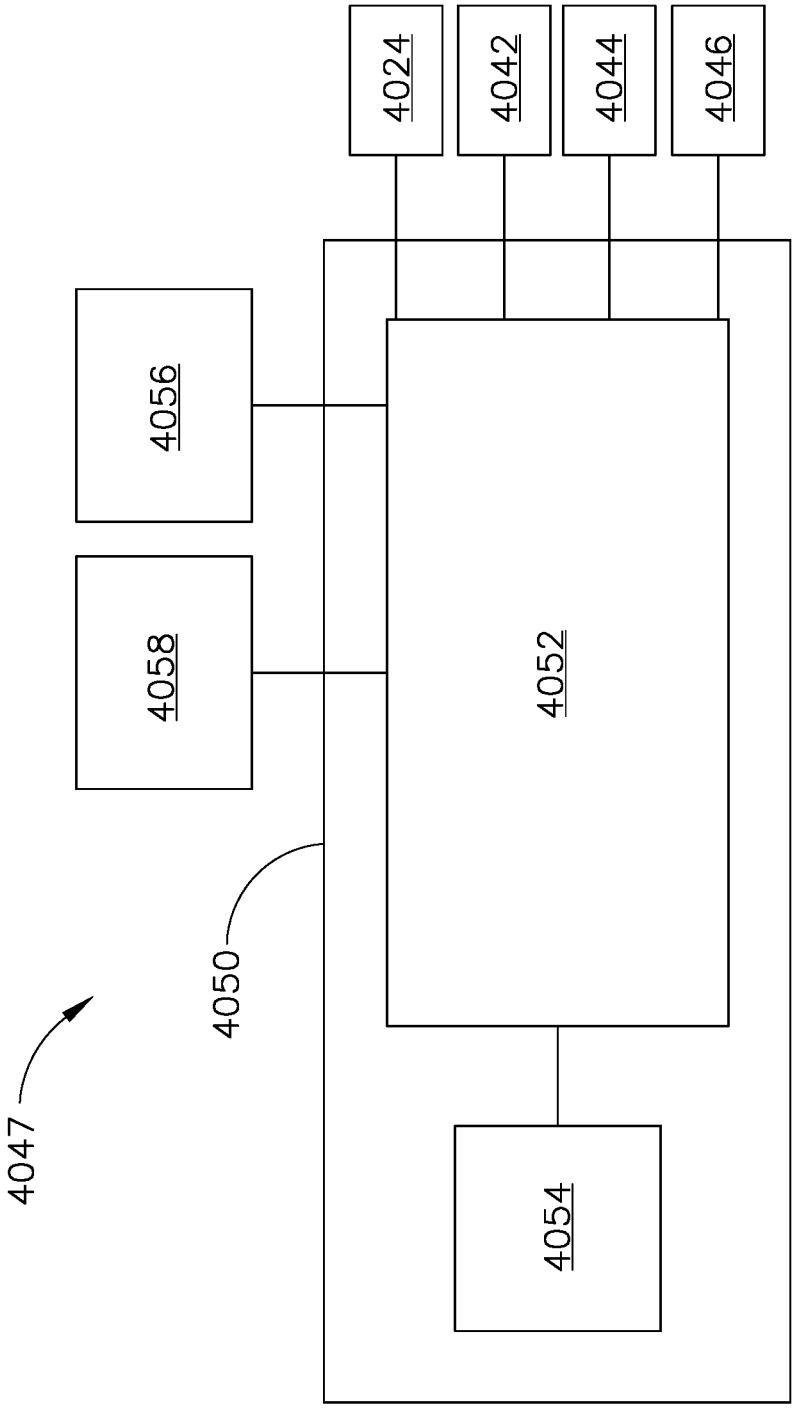

FIG. 65A

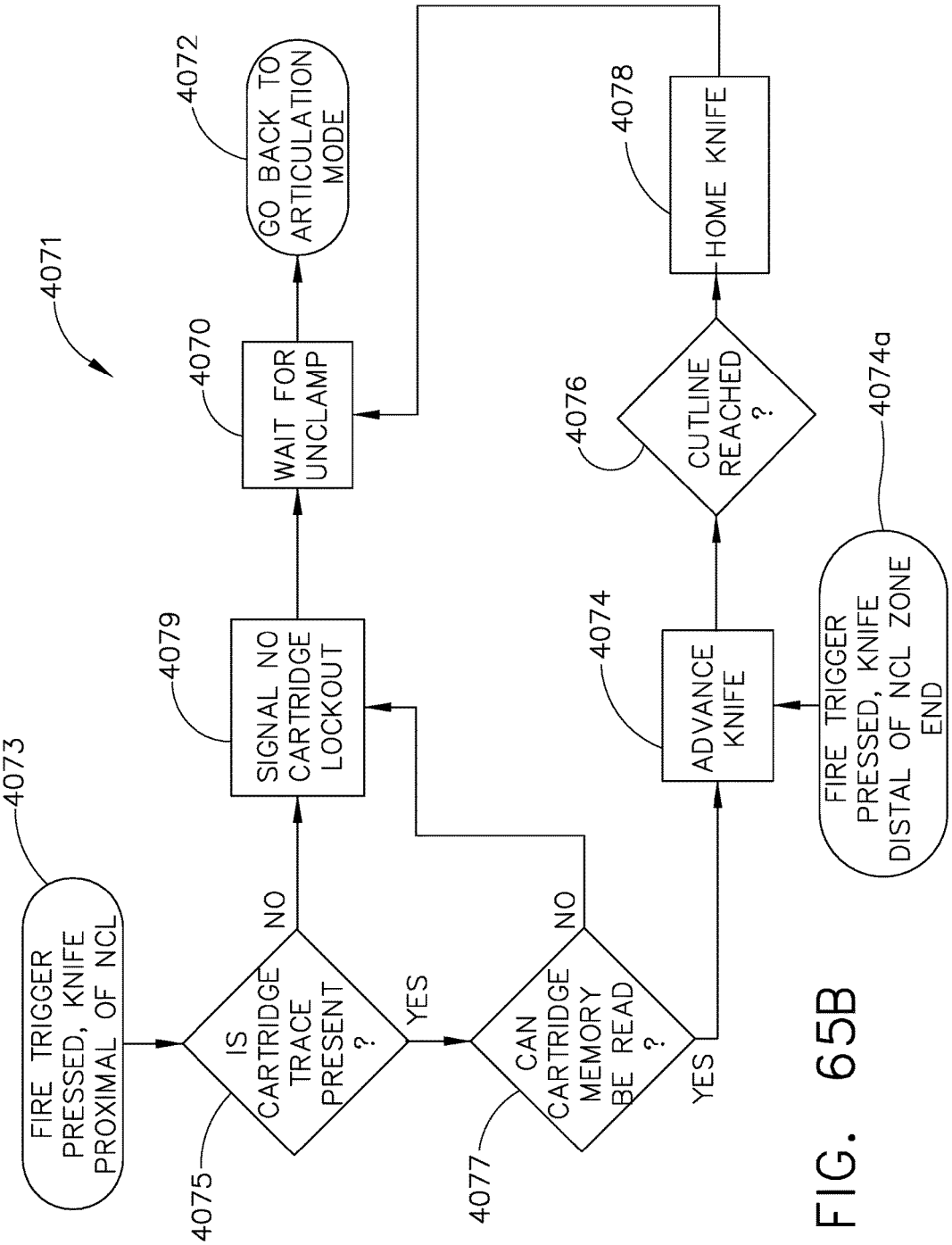
4071
4073
FIRE TRIGGER PRESSED, KNIFE PROXIMAL OF NCL
4075
IS CARTRIDGE TRACE PRESENT ?
NO
YES
4079
SIGNAL NO CARTRIDGE LOCKOUT
4070
WAIT FOR UNCLAMP
4072
GO BACK TO ARTICULATION MODE
4077
CAN CARTRIDGE MEMORY BE READ ?
NO
YES
4074
ADVANCE KNIFE
4076
CUTLINE REACHED ?
4078
HOME KNIFE
4074a
FIRE TRIGGER PRESSED, KNIFE DISTAL OF NCL ZONE END

FIG. 65B

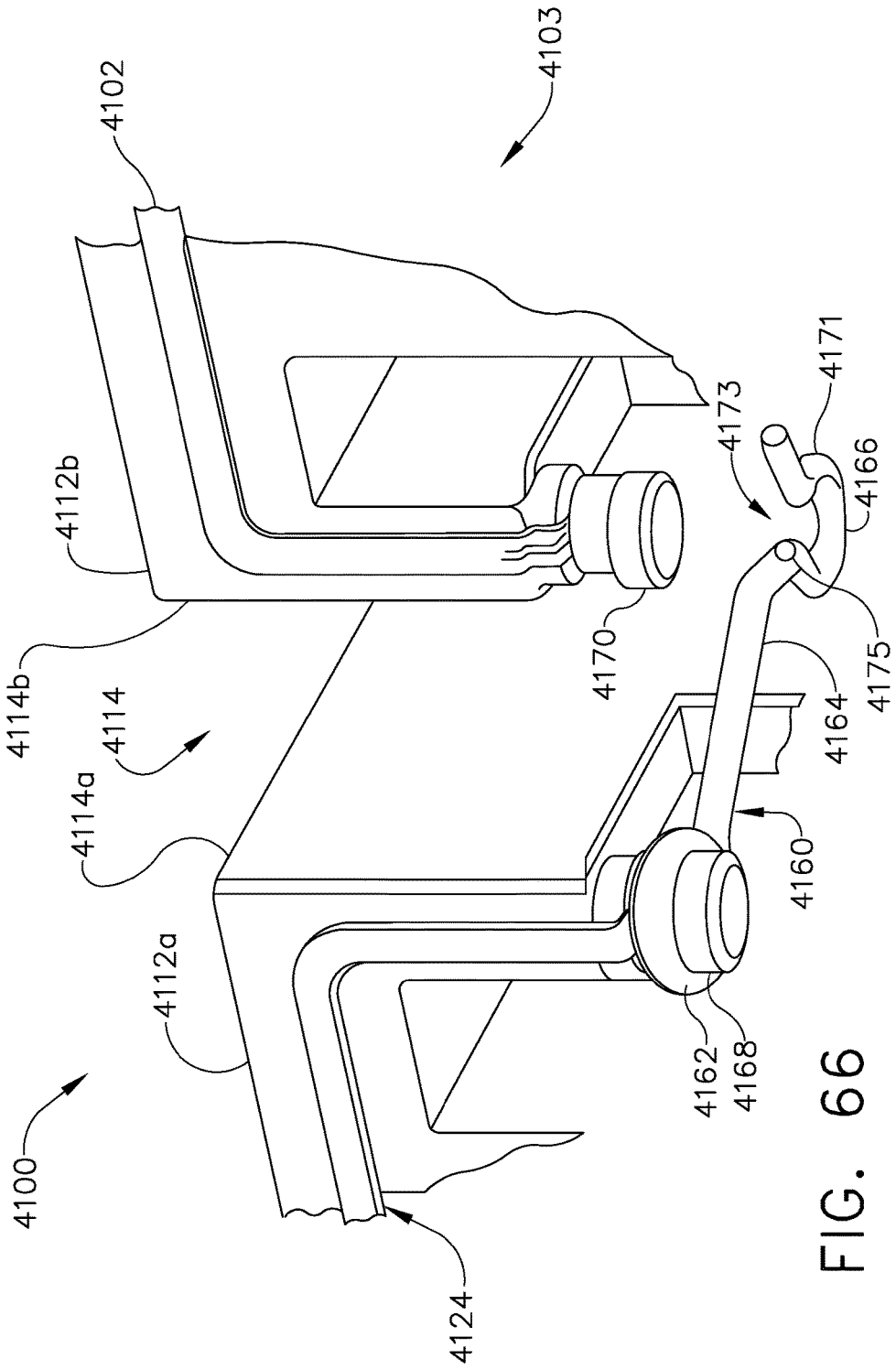
4100
4102
4103
4112a
4112b
4114
4114a
4114b
4124
4160
4162
4164
4166
4168
4170
4171
4173
4175

FIG. 66

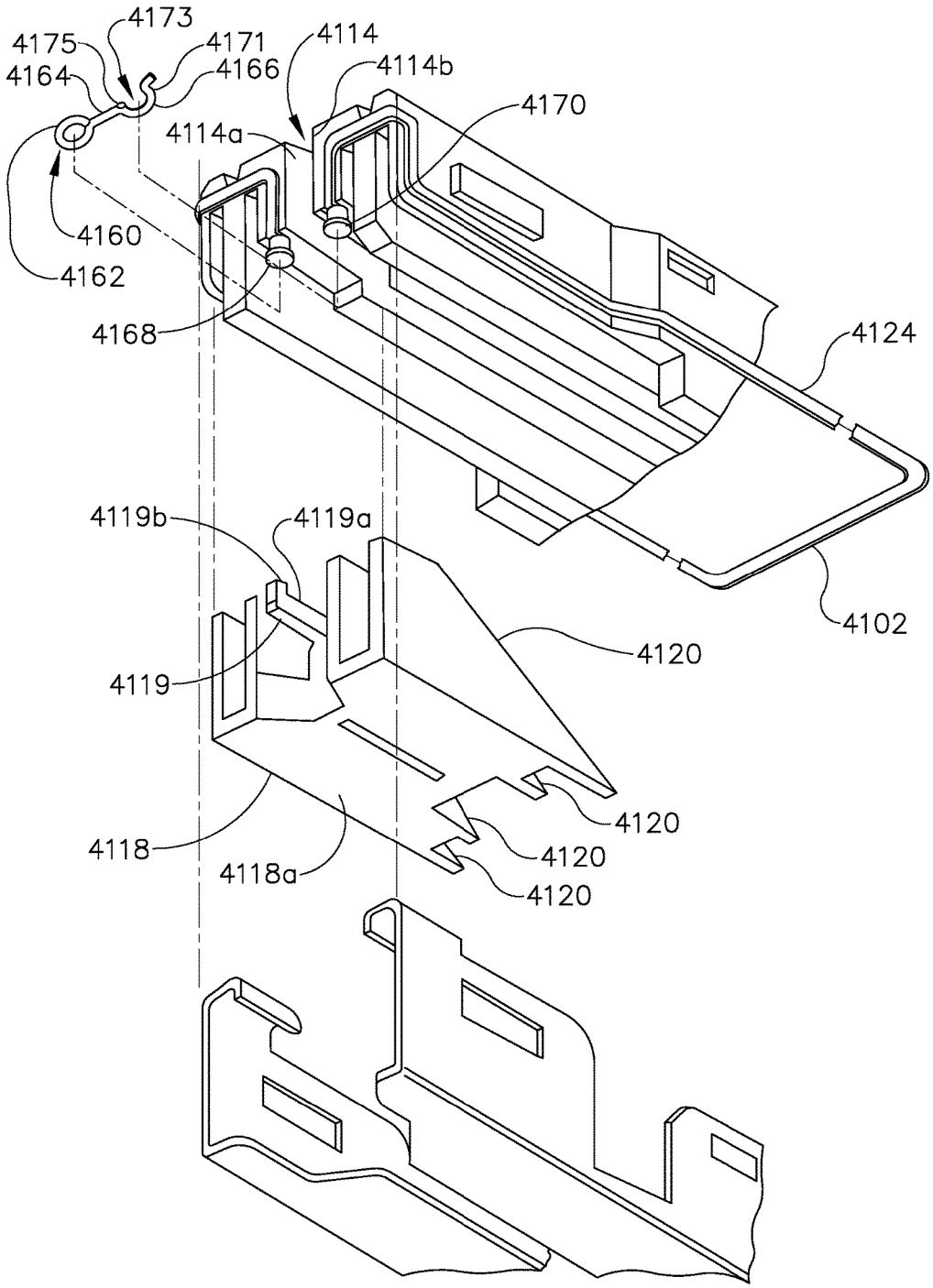
4173
4175
4171
4114
4164
4166
4114b
4170
4114a
4160
4162
4168
4124
4119b
4119a
4102
4120
4119
4120
4118
4120
4118a
4120

FIG. 67

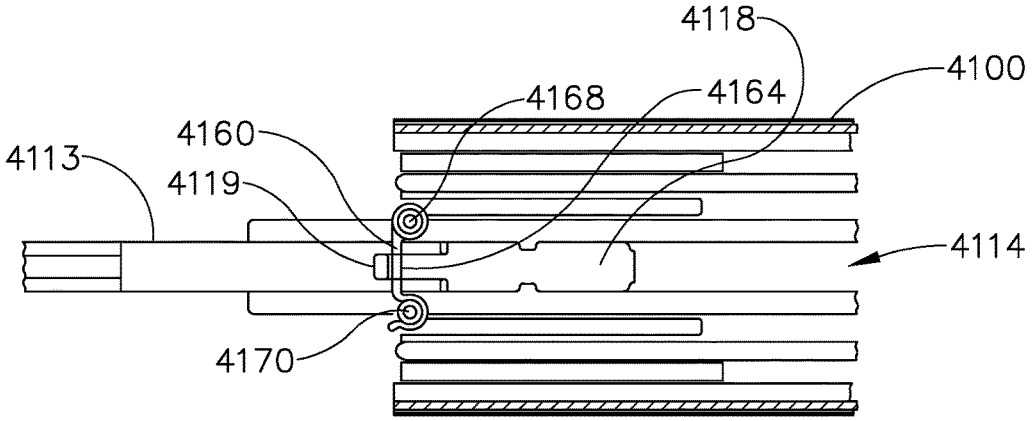

FIG. 68

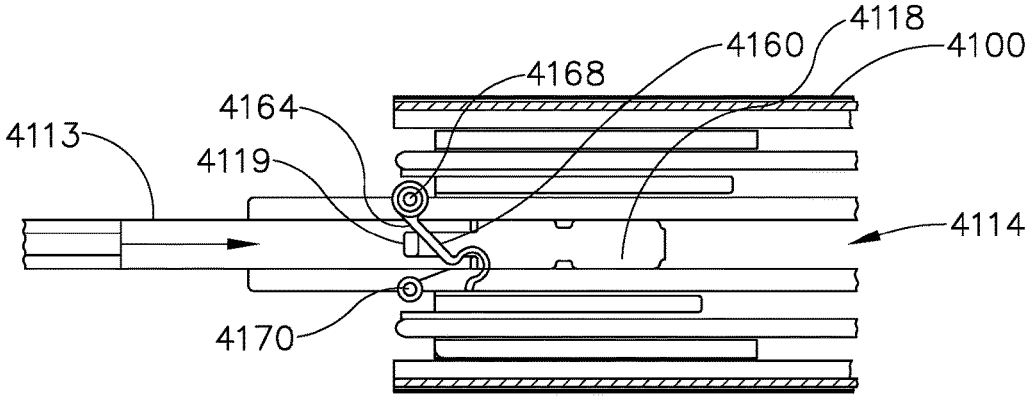

FIG. 69

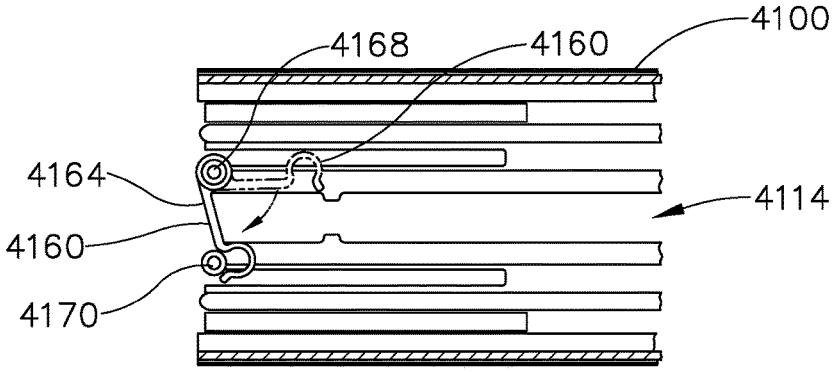

FIG. 70

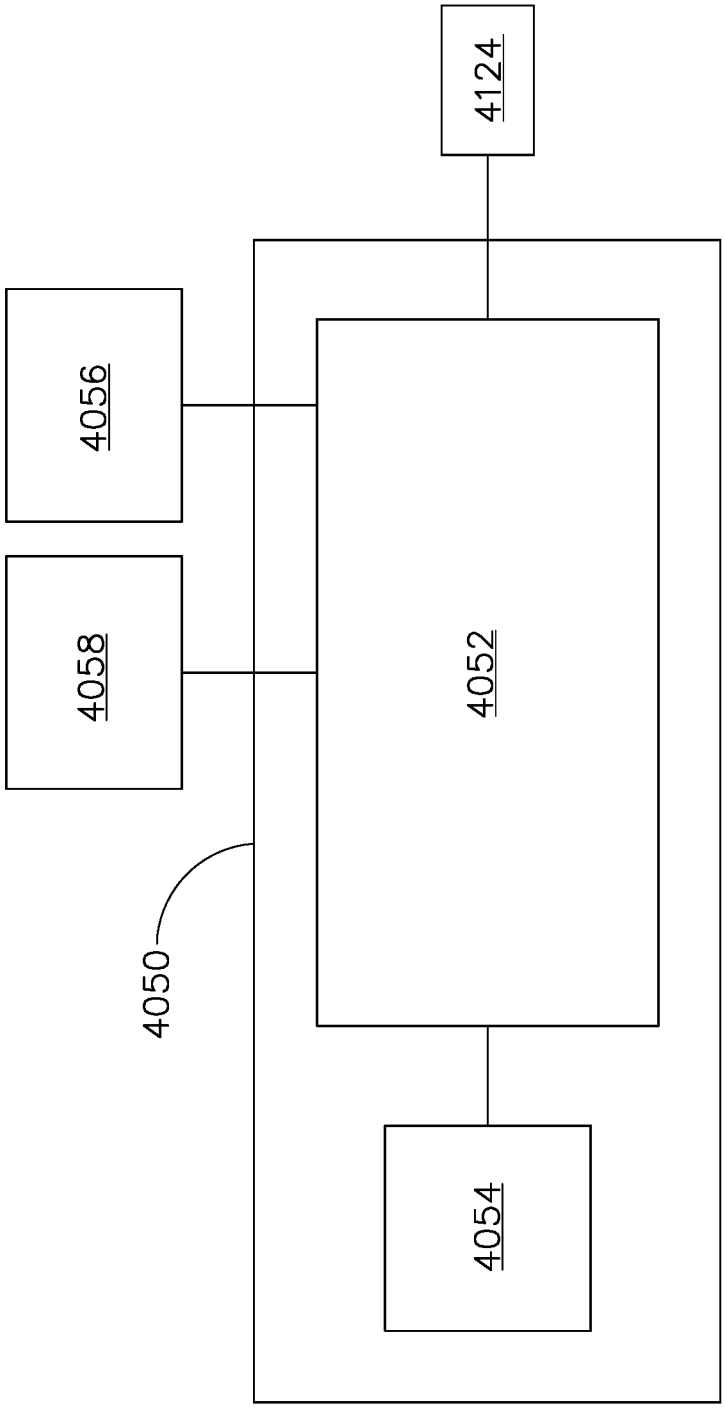

FIG. 71

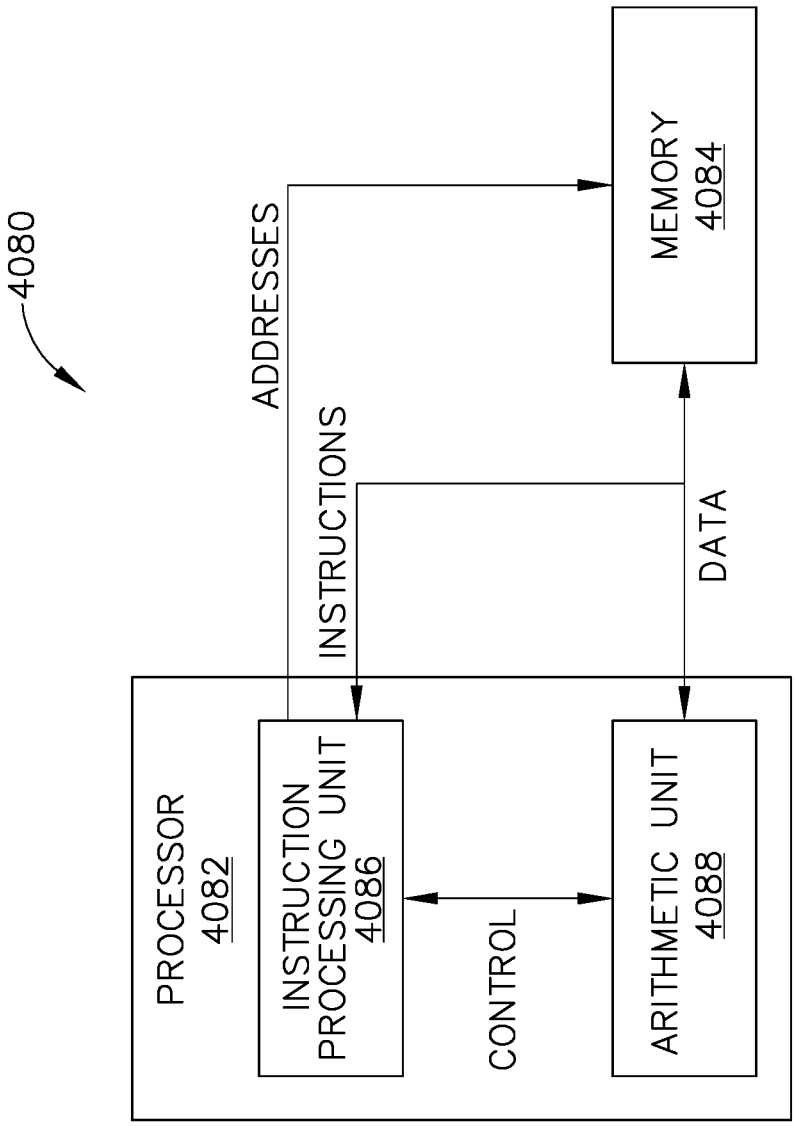
4080
PROCESSOR
4082
INSTRUCTION
PROCESSING UNIT
4086
ADDRESSES
INSTRUCTIONS
CONTROL
ARITHMETIC UNIT
4088
DATA
MEMORY
4084

FIG. 72

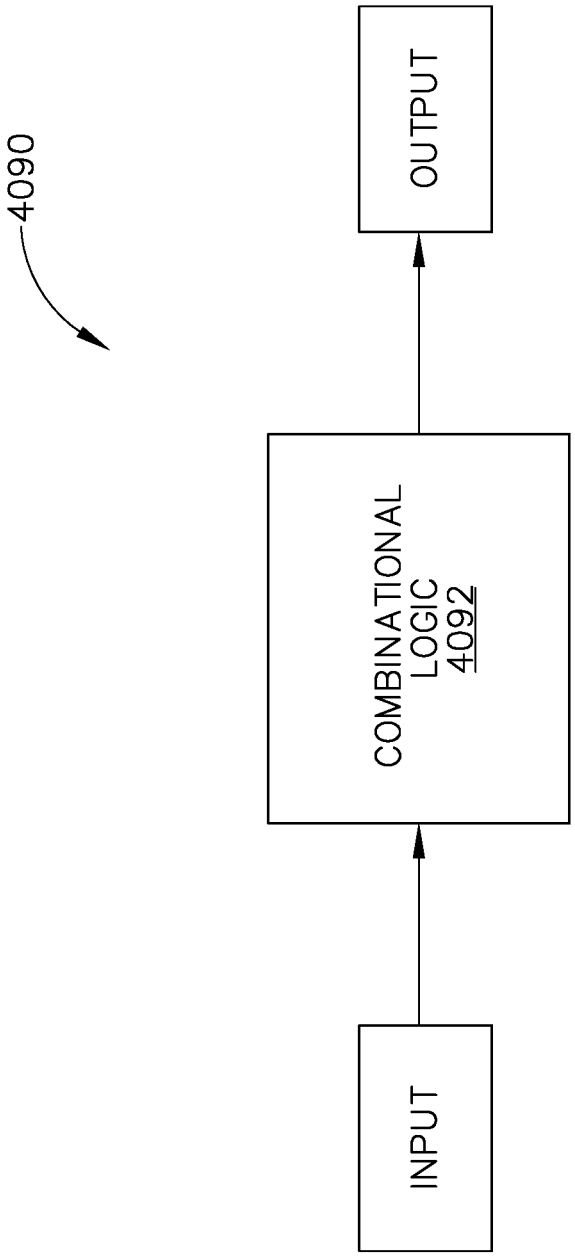

FIG. 73

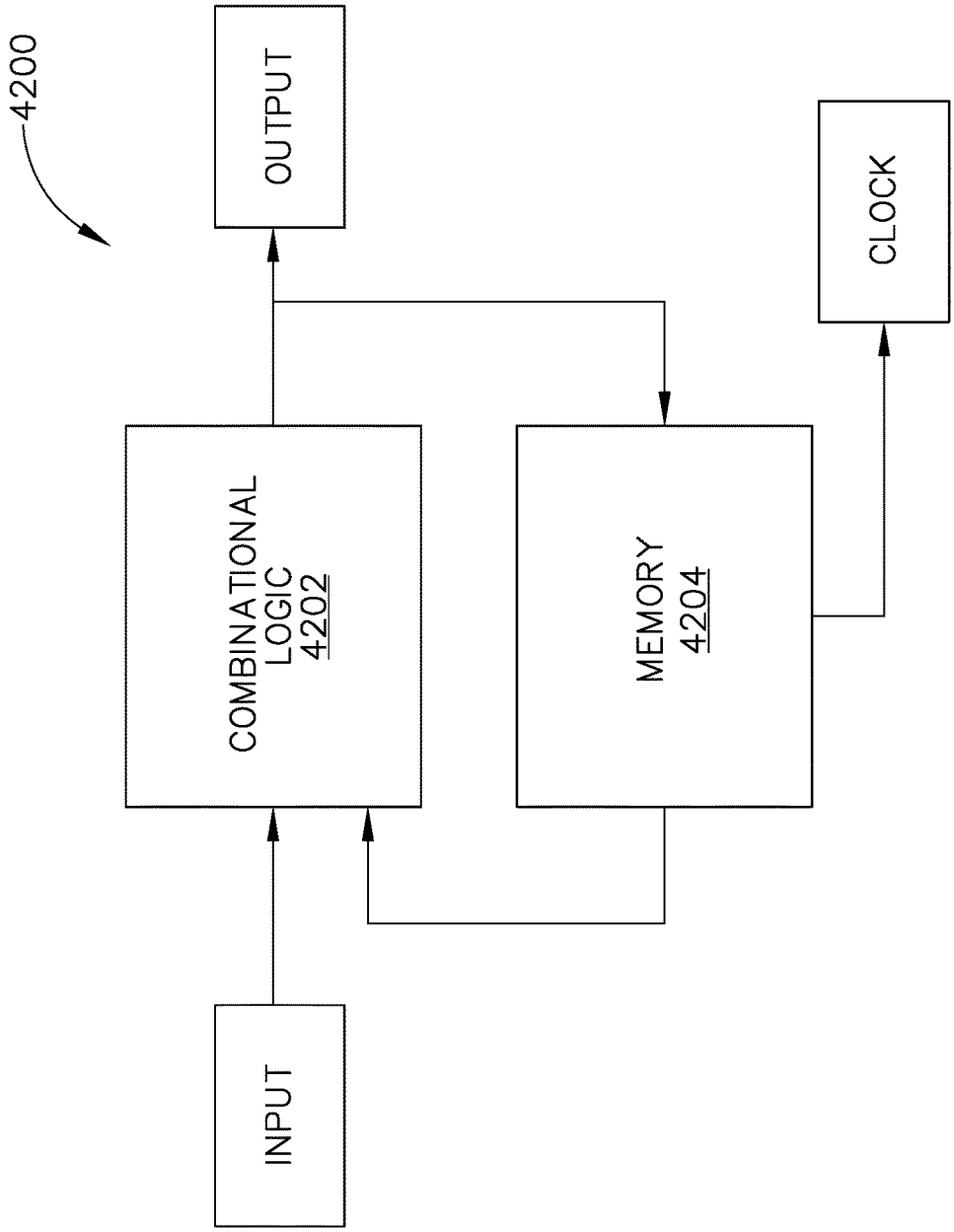
4200
OUTPUT
COMBINATIONAL LOGIC 4202
MEMORY 4204
CLOCK
INPUT

FIG. 74

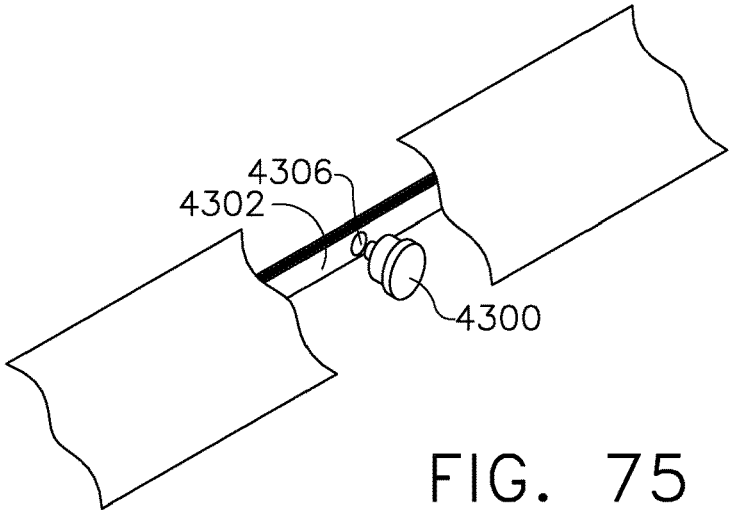

FIG. 75

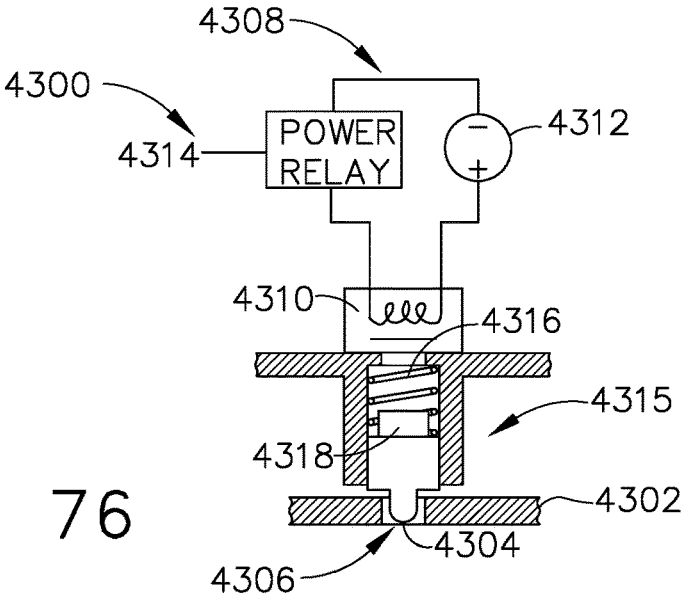

FIG. 76

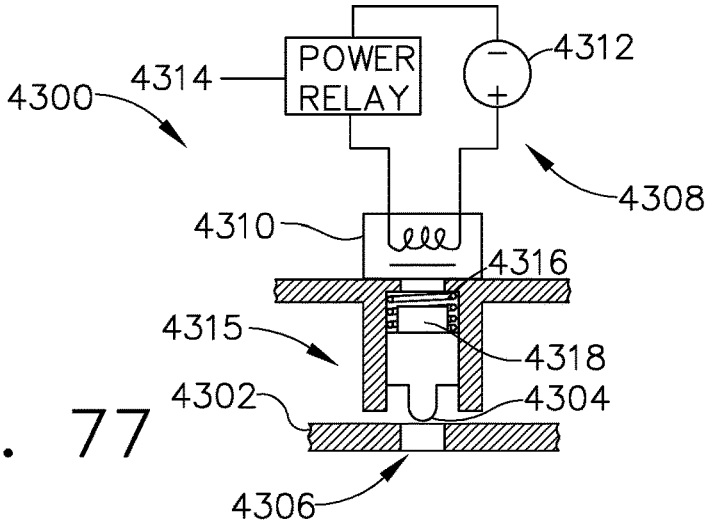

FIG. 77

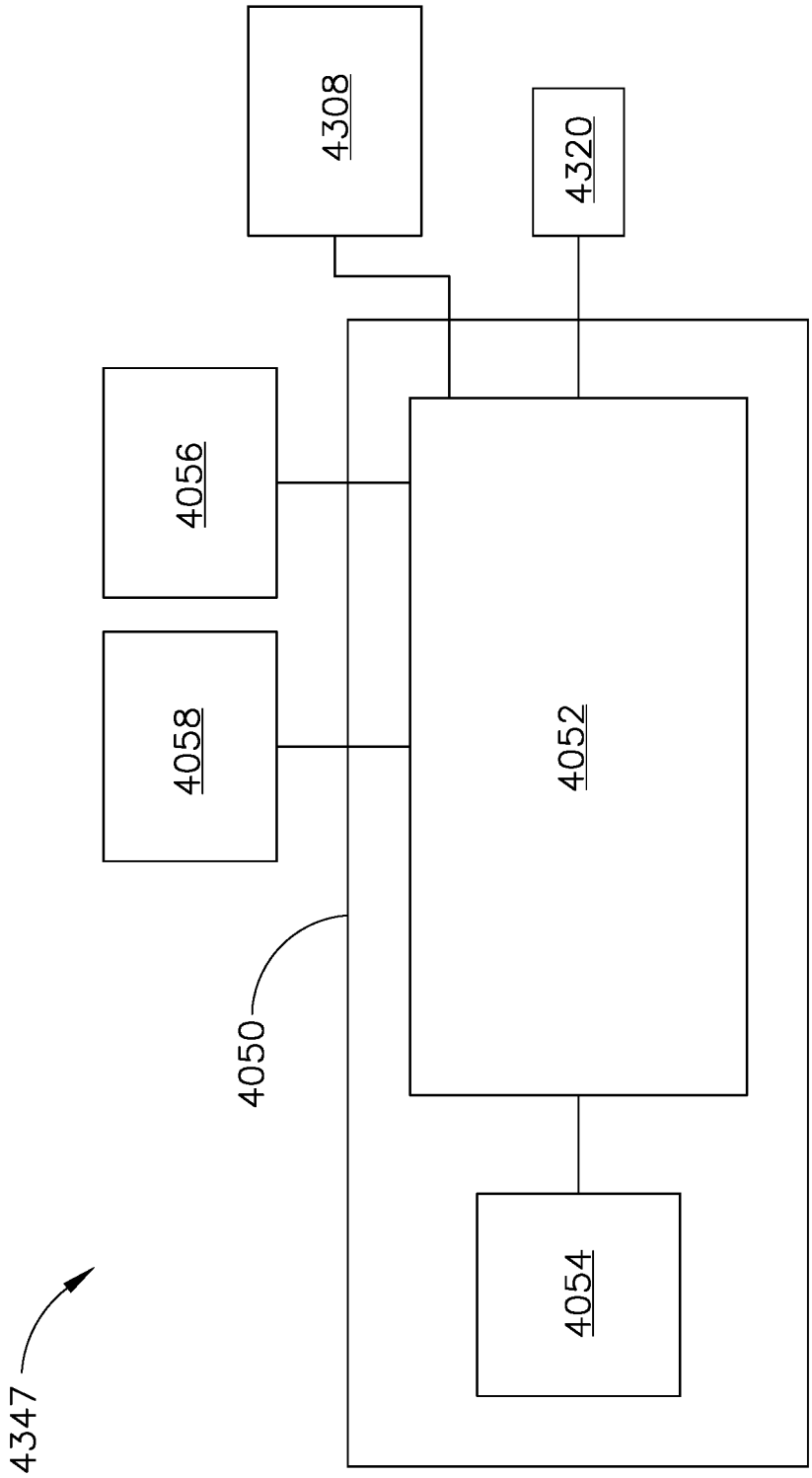

FIG. 78

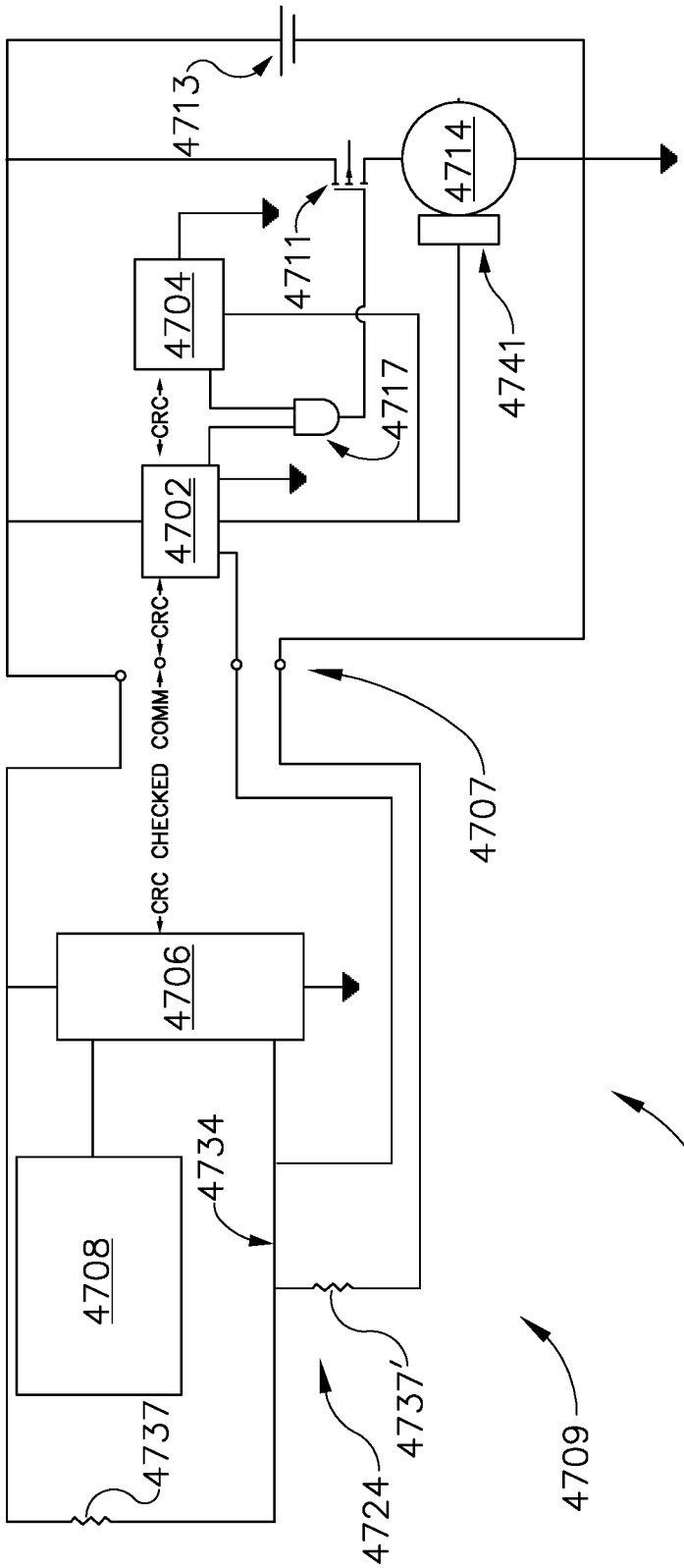
4713
4714
4711
4704
4741
4717
CRC
4702
CRC
CRC CHECKED COMM
4707
4706
4734
4708
4737
4737'
4724
4709
4700

FIG. 79

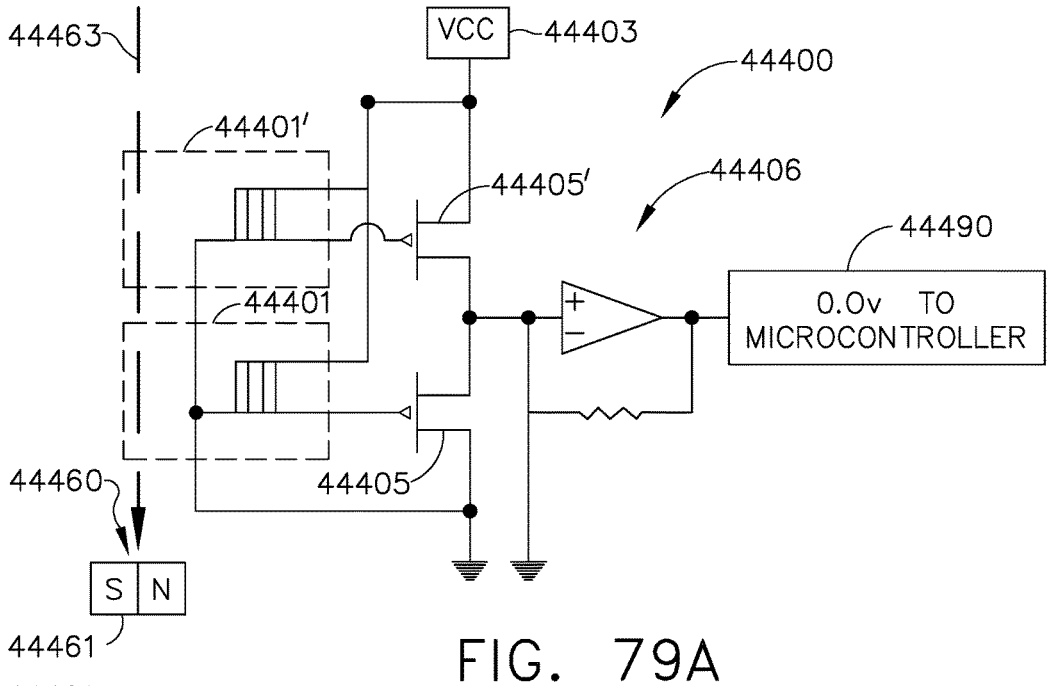

FIG. 79A

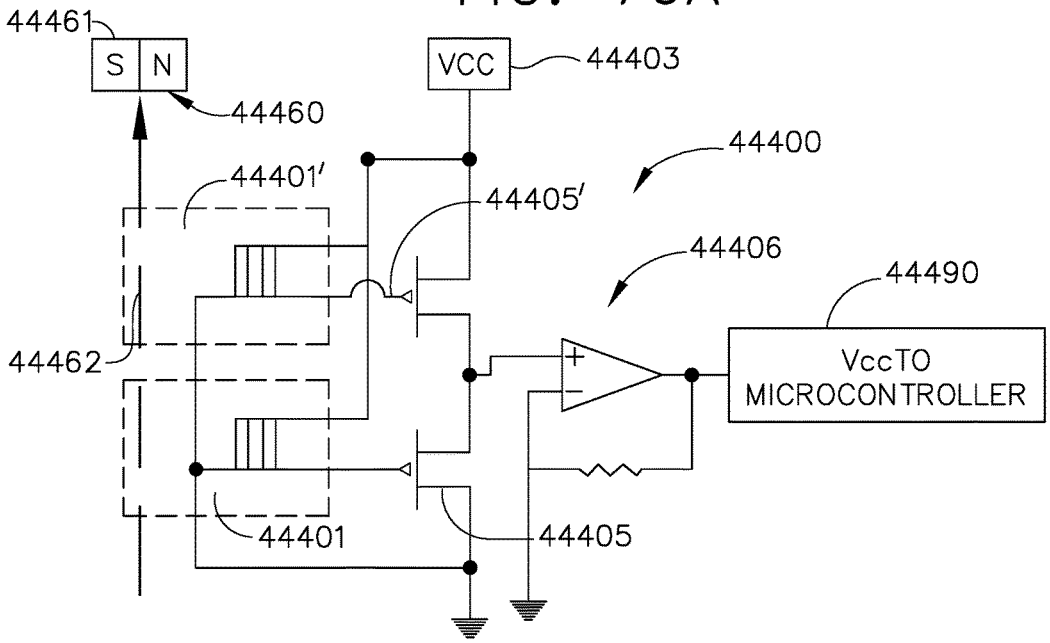

FIG. 79B

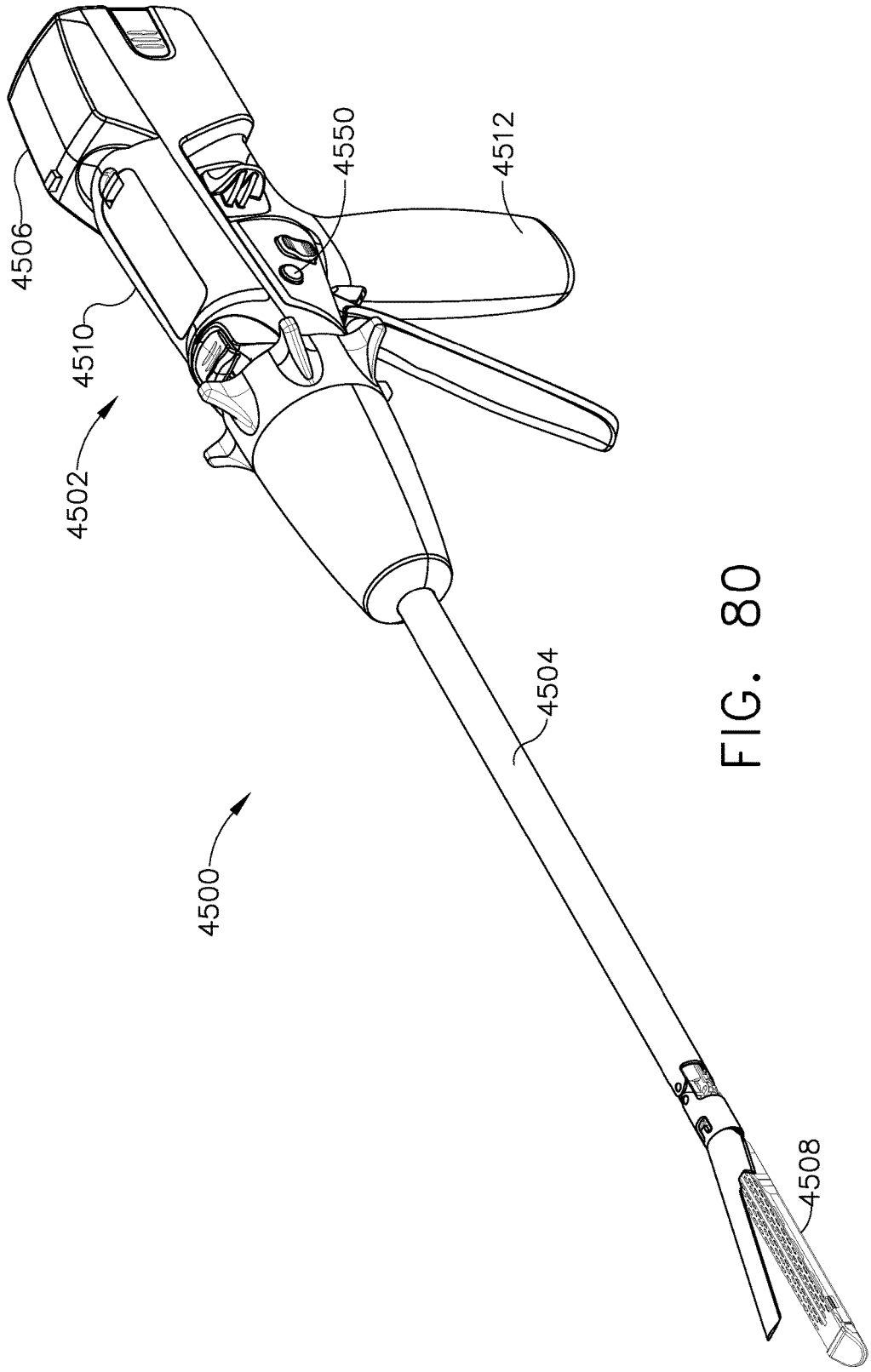

FIG. 80

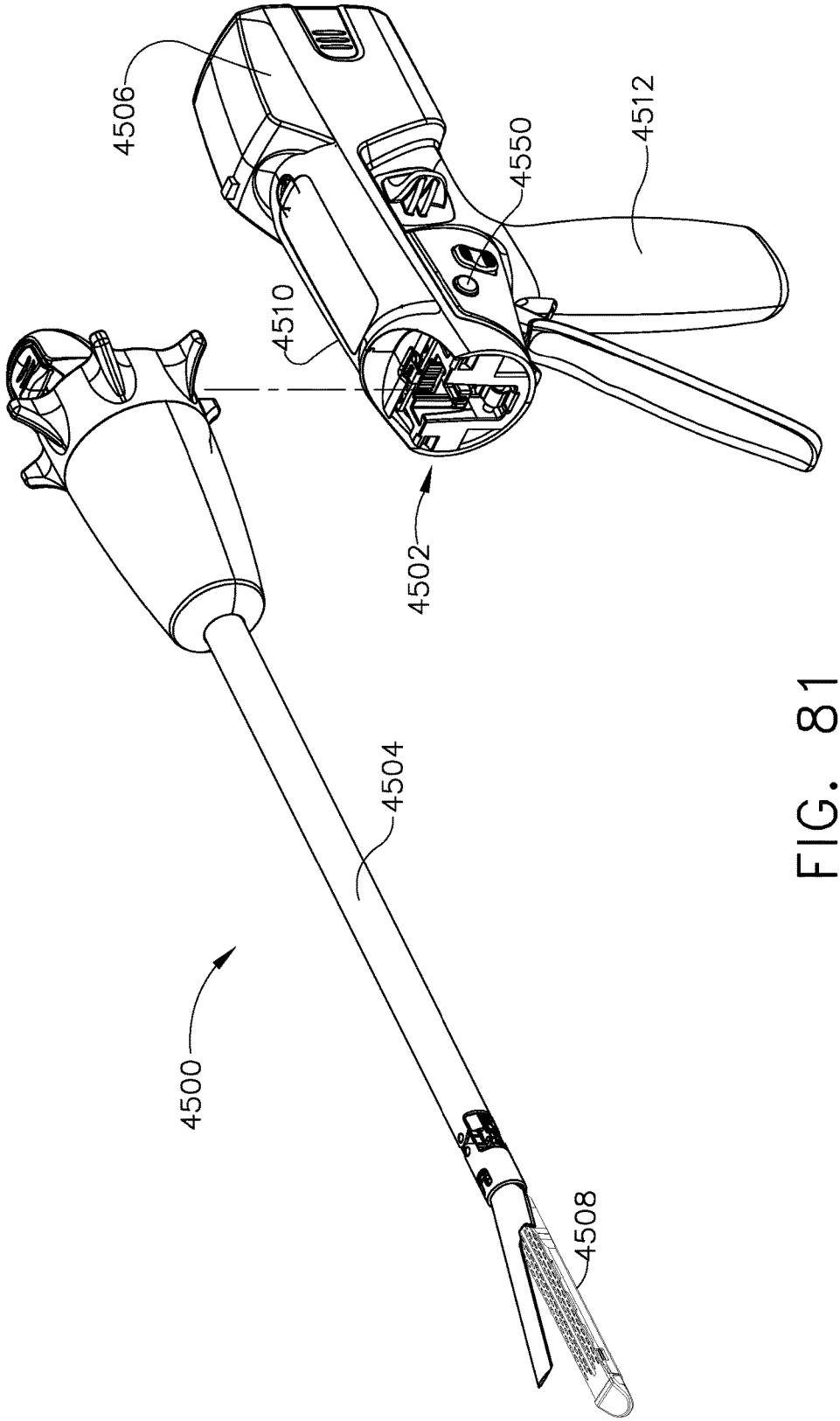

FIG. 81

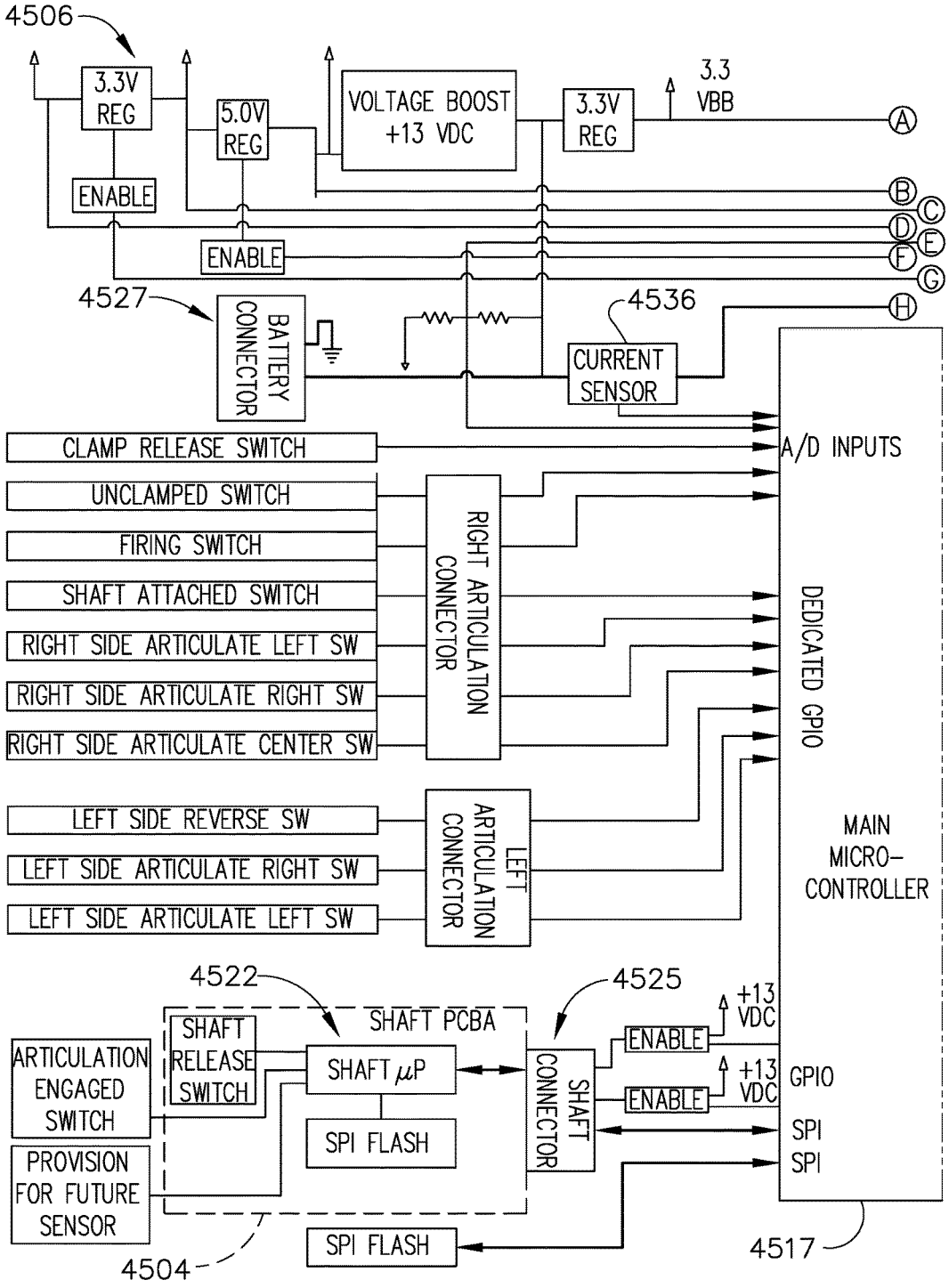
4506
3.3V REG
5.0V REG
VOLTAGE BOOST +13 VDC
3.3V REG
3.3 VBB
A
B
C
D
E
F
G
H
ENABLE
ENABLE
4527
BATTERY CONNECTOR
4536
CURRENT SENSOR
CLAMP RELEASE SWITCH
UNCLAMPED SWITCH
FIRING SWITCH
SHAFT ATTACHED SWITCH
RIGHT SIDE ARTICULATE LEFT SW
RIGHT SIDE ARTICULATE RIGHT SW
RIGHT SIDE ARTICULATE CENTER SW
RIGHT ARTICULATION CONNECTOR
A/D INPUTS
DEDICATED GPIO
LEFT SIDE REVERSE SW
LEFT SIDE ARTICULATE RIGHT SW
LEFT SIDE ARTICULATE LEFT SW
LEFT ARTICULATION CONNECTOR
MAIN MICRO-CONTROLLER
4522
SHAFT PCBA
4525
ARTICULATION ENGAGED SWITCH
SHAFT RELEASE SWITCH
SHAFT μP
SPI FLASH
PROVISION FOR FUTURE SENSOR
SHAFT CONNECTOR
ENABLE
ENABLE
+13 VDC
+13 VDC
GPIO
SPI
SPI
SPI FLASH
4504
4517

FIG. 82A

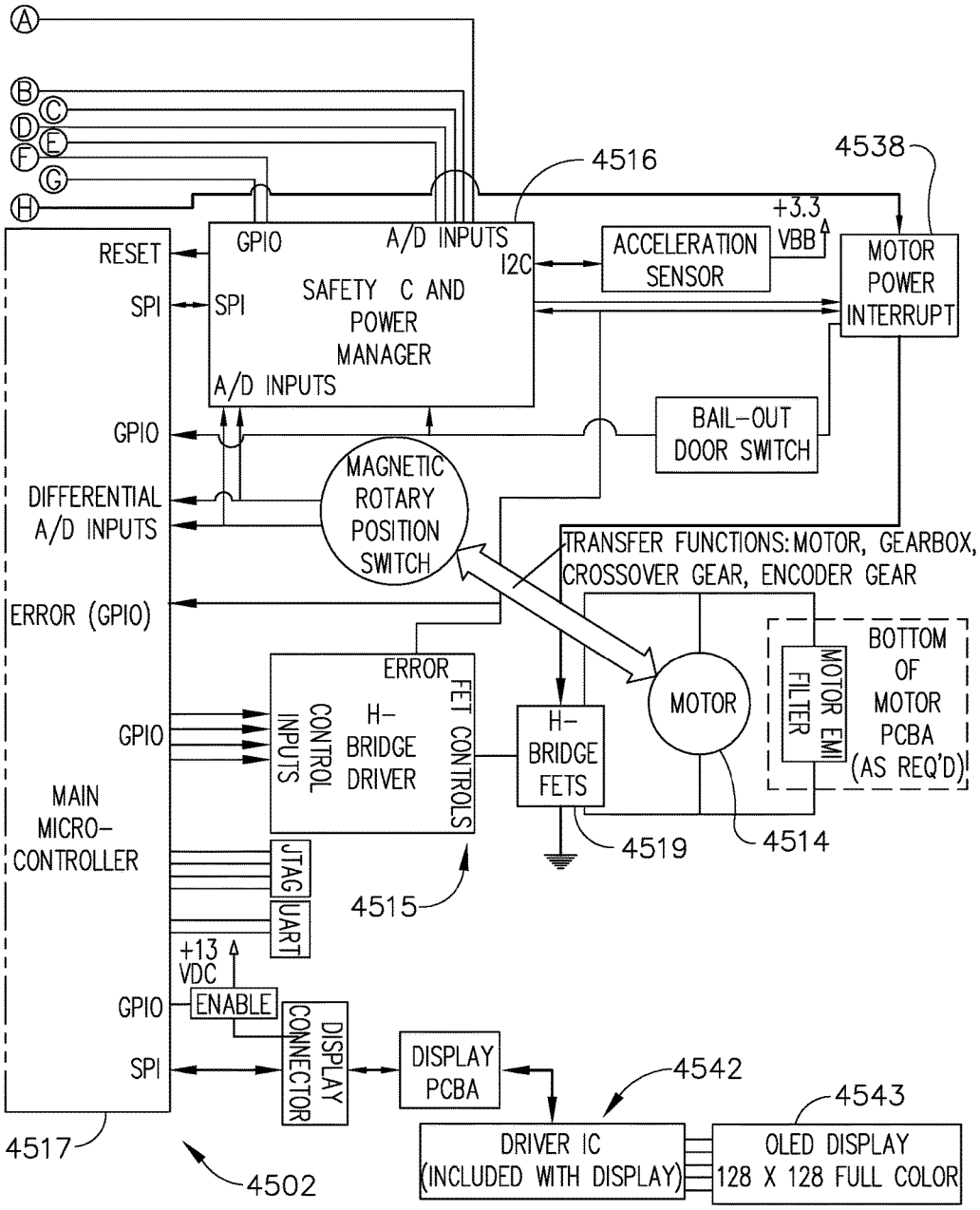
A
B
C
D
E
F
G
H
4516
4538
+3.3
VBB
RESET
SPI
GPIO
A/D INPUTS
I2C
SAFETY C AND POWER MANAGER
A/D INPUTS
ACCELERATION SENSOR
MOTOR POWER INTERRUPT
GPIO
BAIL-OUT DOOR SWITCH
DIFFERENTIAL A/D INPUTS
MAGNETIC ROTARY POSITION SWITCH
TRANSFER FUNCTIONS: MOTOR, GEARBOX, CROSSOVER GEAR, ENCODER GEAR
ERROR (GPIO)
ERROR
CONTROL INPUTS
H-BRIDGE DRIVER
FET CONTROLS
H-BRIDGE FETS
MOTOR
MOTOR EMI FILTER
BOTTOM OF MOTOR PCBA (AS REQ'D)
GPIO
MAIN MICRO-CONTROLLER
JTAG
UART
4519
4514
4515
+13 VDC
GPIO
ENABLE
DISPLAY CONNECTOR
SPI
DISPLAY PCBA
4542
4543
DRIVER IC (INCLUDED WITH DISPLAY)
OLED DISPLAY 128 X 128 FULL COLOR
4517
4502

FIG. 82B

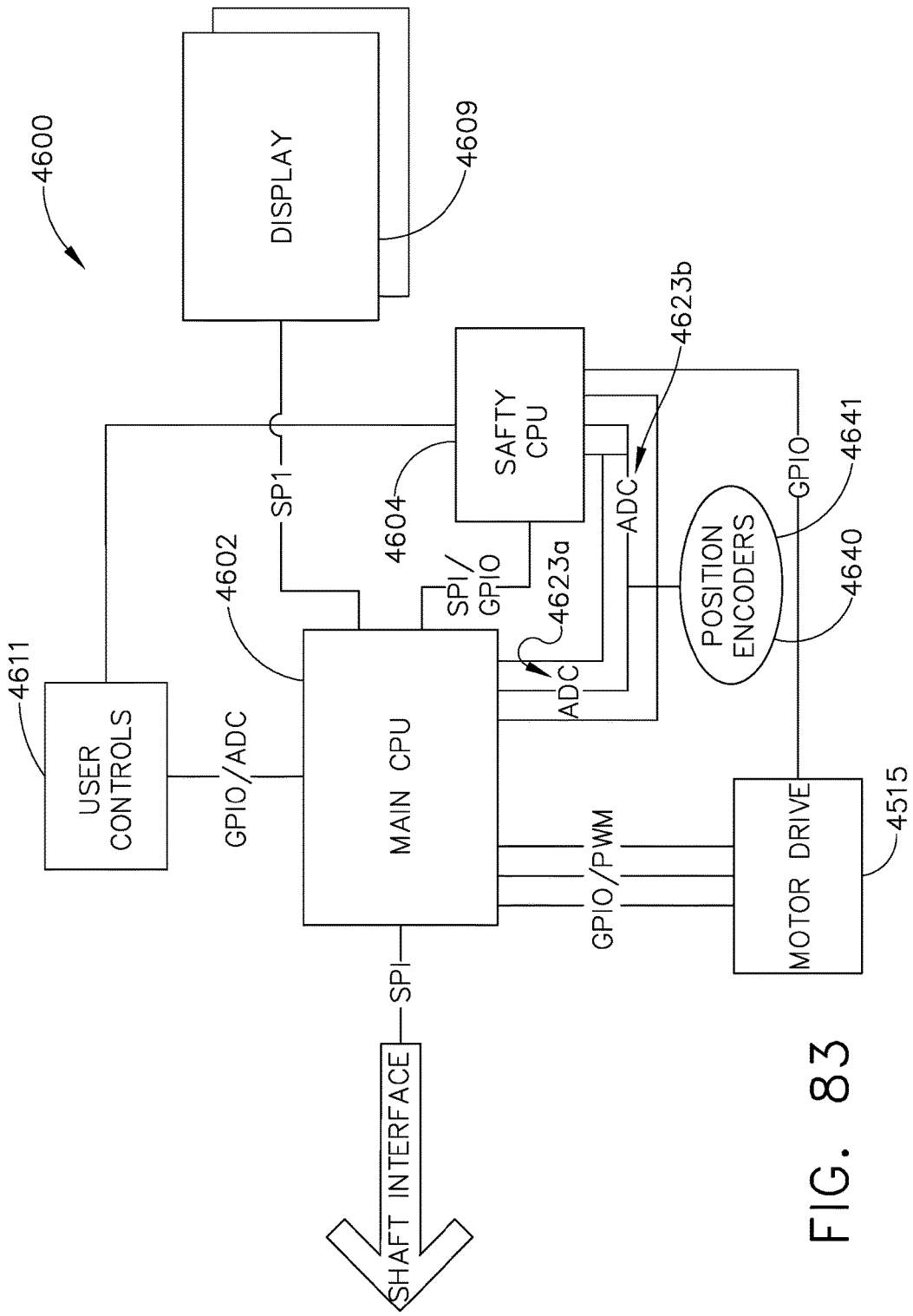
4600
DISPLAY
4609
SAFTY CPU
4623b
4604
SP1
ADC
GPIO
4641
POSITION ENCODERS
4640
4602
SPI / GPIO
4623a
4611
USER CONTROLS
GPIO/ADC
MAIN CPU
ADC
GPIO/PWM
MOTOR DRIVE
4515
SPI
SHAFT INTERFACE

FIG. 83

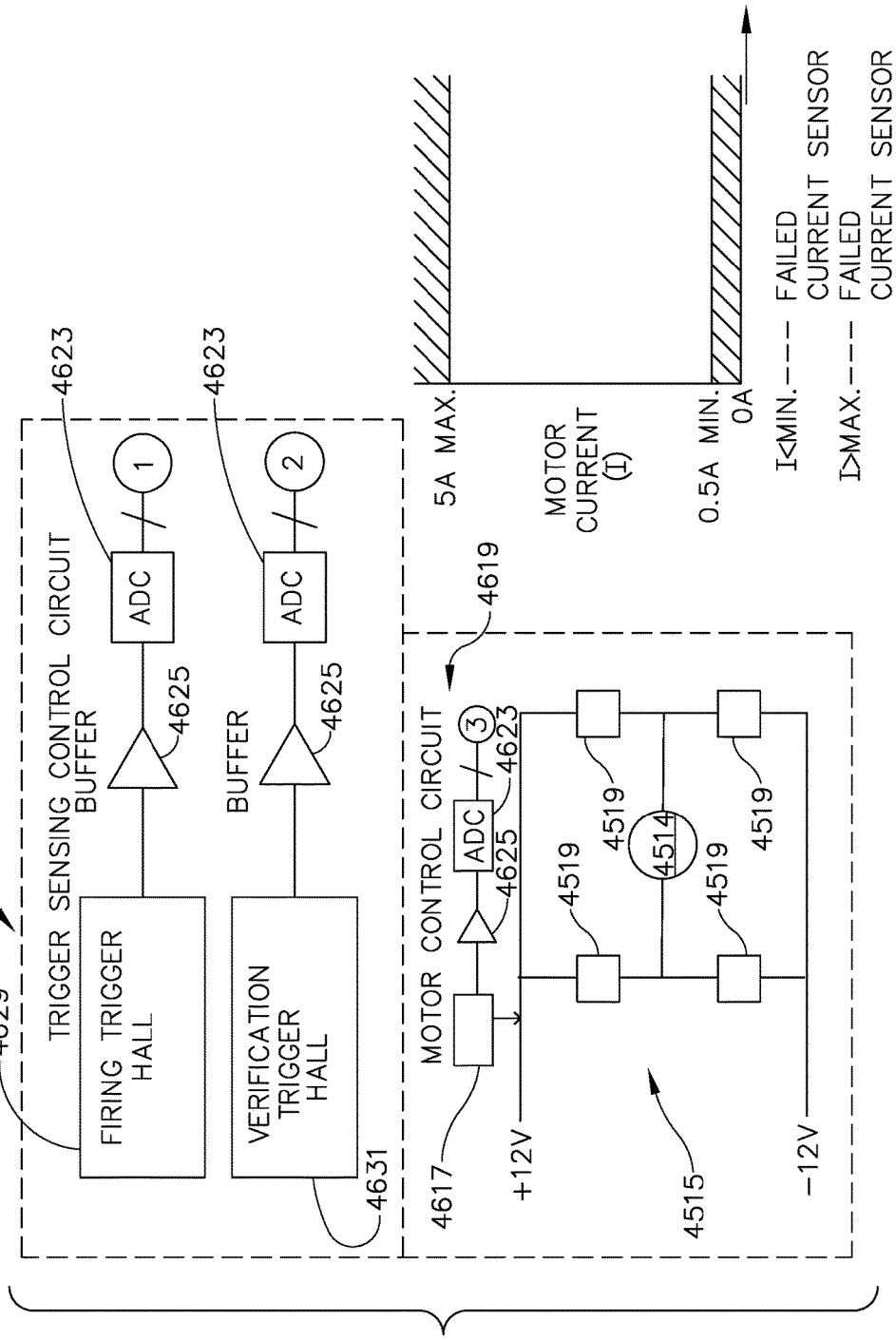

FIG. 84A

FIG. 84B

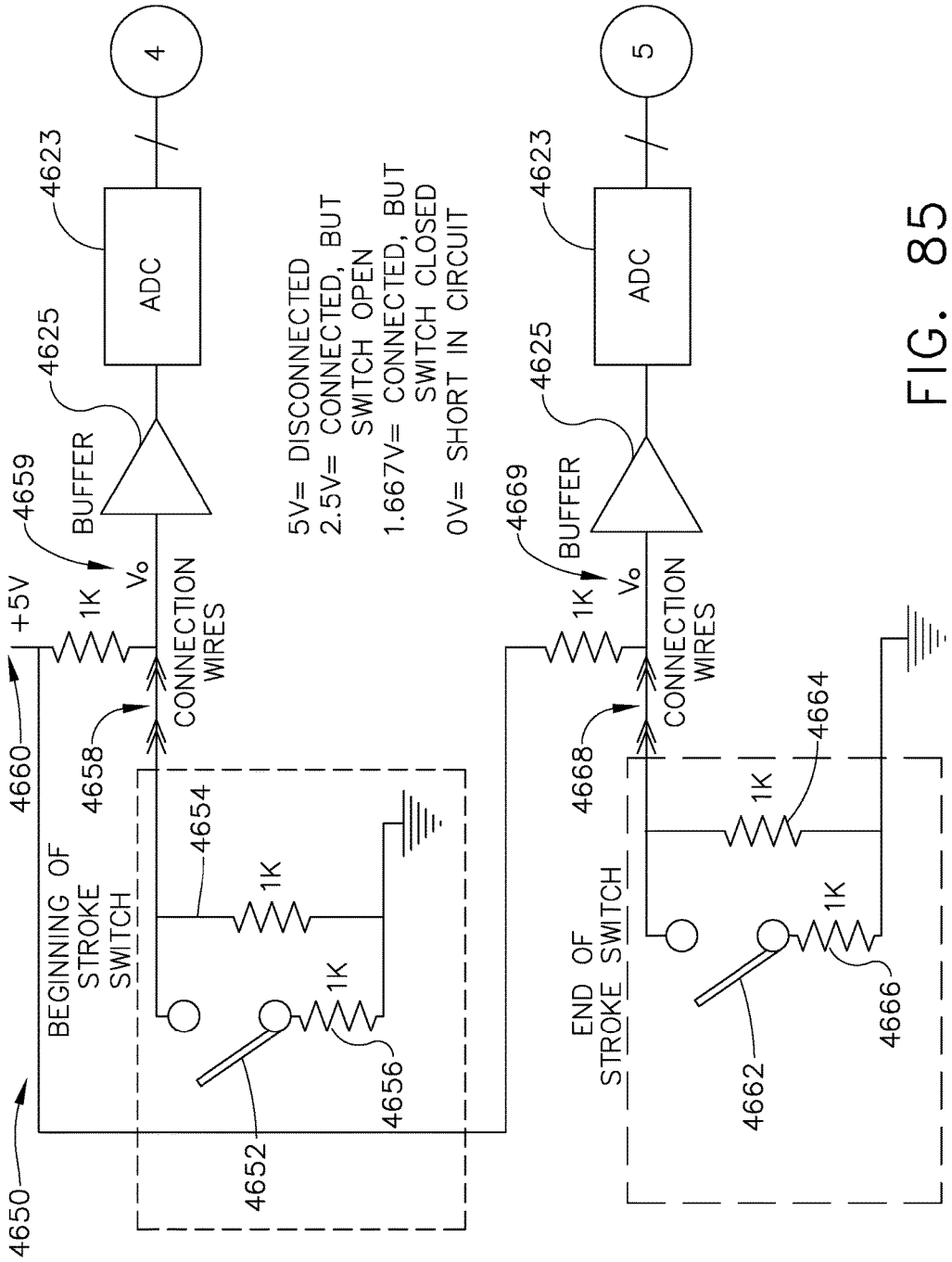
4
5
ADC
ADC
4623
4623
4625
4625
BUFFER
BUFFER
4659
4669
+5V
1K
1K
V_o
V_o
CONNECTION WIRES
CONNECTION WIRES
4660
4658
4668
4654
4664
1K
1K
1K
1K
BEGINNING OF STROKE SWITCH
END OF STROKE SWITCH
4656
4666
4652
4662
4650
5V= DISCONNECTED
2.5V= CONNECTED, BUT SWITCH OPEN
1.667V= CONNECTED, BUT SWITCH CLOSED
0V= SHORT IN CIRCUIT

FIG. 85

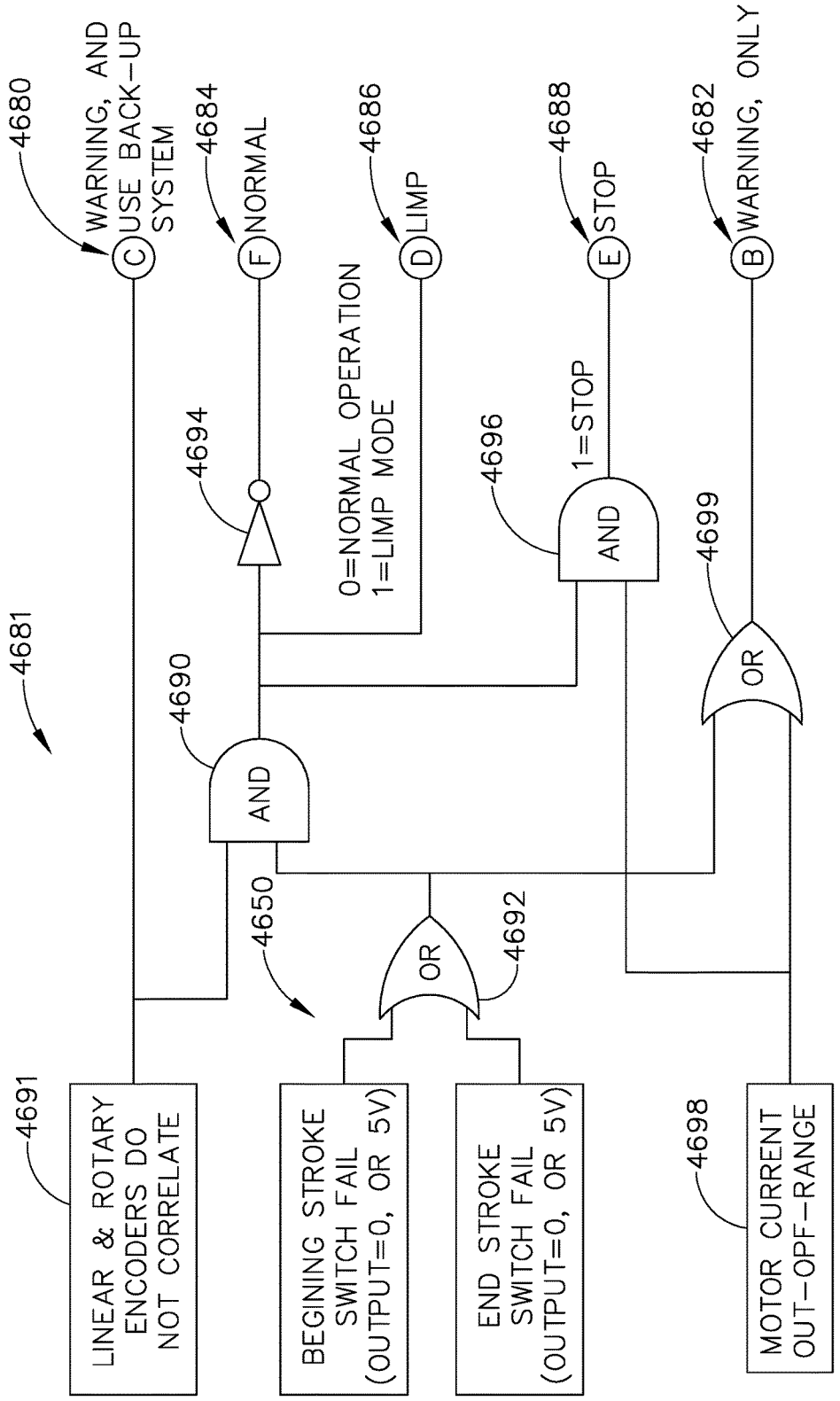
4680
WARNING, AND USE BACK-UP SYSTEM
C
4684
NORMAL
F
4686
LIMP
D
4688
STOP
E
4682
WARNING, ONLY
B
4694
0=NORMAL OPERATION
1=LIMP MODE
4696
1=STOP
AND
4699
OR
4681
4690
AND
4650
OR
4692
4691
LINEAR & ROTARY ENCODERS DO NOT CORRELATE
BEGINING STROKE SWITCH FAIL (OUTPUT=0, OR 5V)
END STROKE SWITCH FAIL (OUTPUT=0, OR 5V)
4698
MOTOR CURRENT OUT-OPF-RANGE

FIG. 86

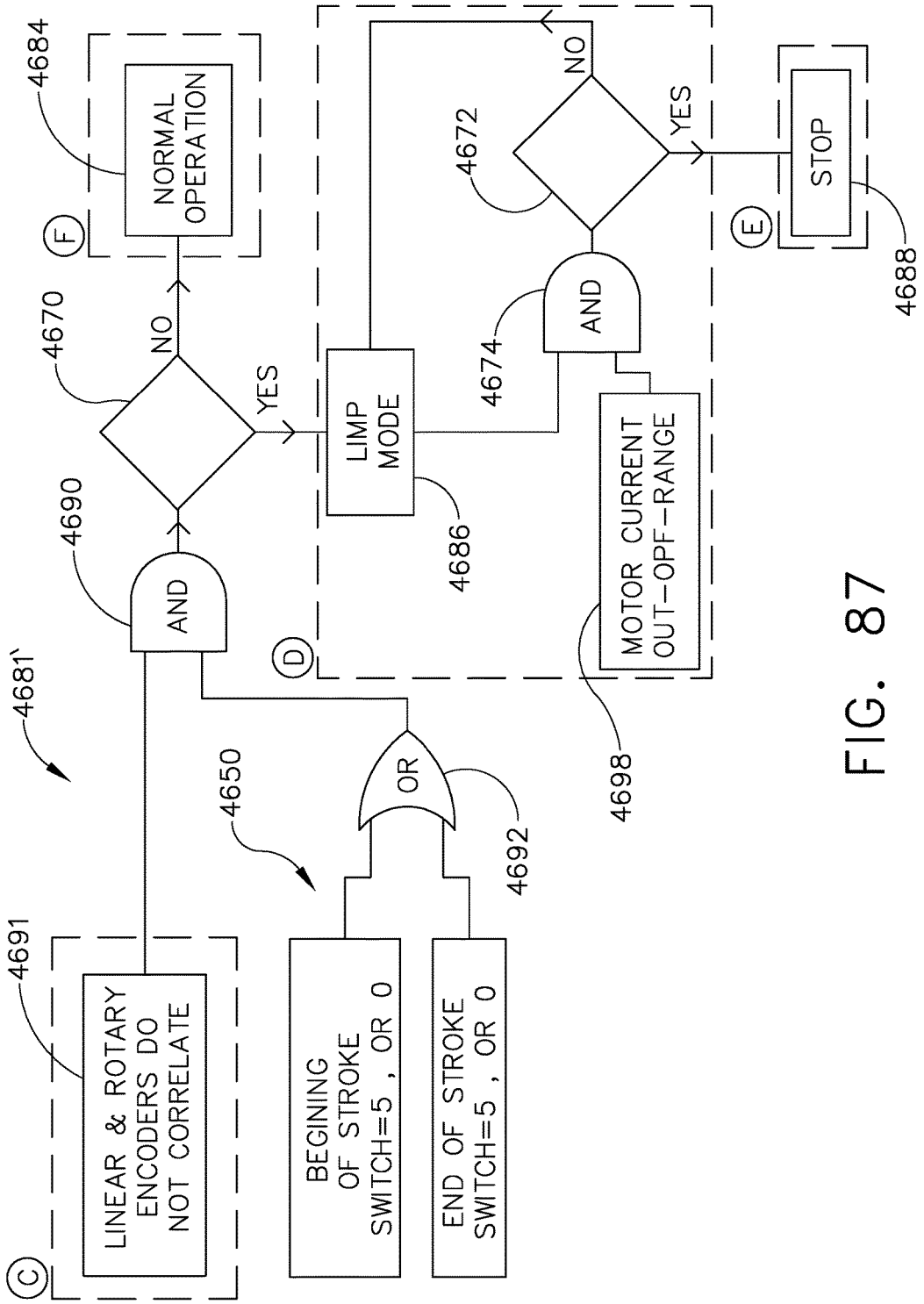
4684
NORMAL OPERATION
F
4670
NO
YES
4690
AND
4681'
LIMP MODE
4686
D
NO
4672
YES
AND
4674
MOTOR CURRENT OUT-OPF-RANGE
4698
STOP
E
4688
4650
OR
4692
4691
LINEAR & ROTARY ENCODERS DO NOT CORRELATE
C
BEGINING OF STROKE SWITCH=5 , OR 0
END OF STROKE SWITCH=5 , OR 0

FIG. 87

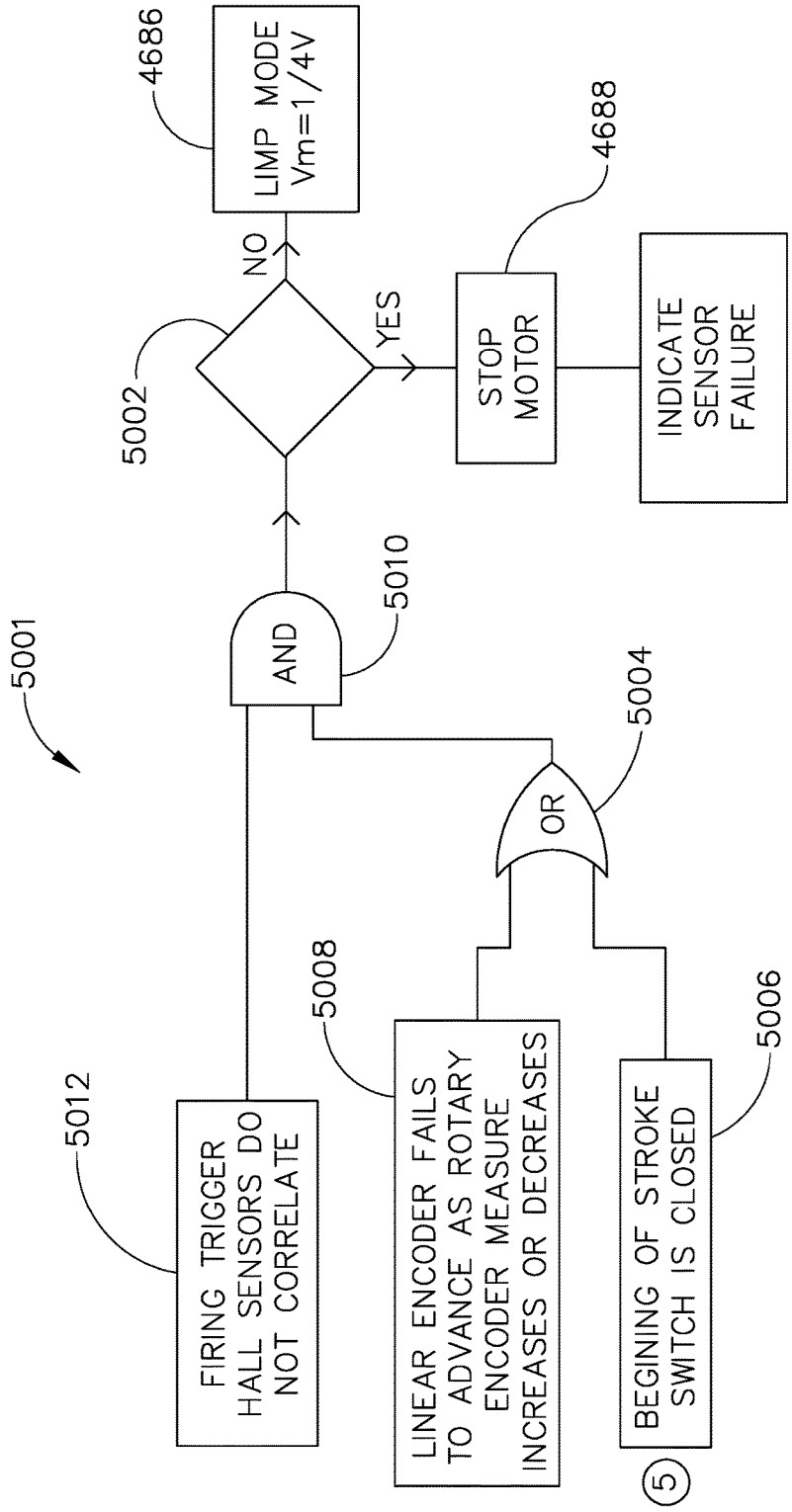
5001
5012
FIRING TRIGGER HALL SENSORS DO NOT CORRELATE
5008
LINEAR ENCODER FAILS TO ADVANCE AS ROTARY ENCODER MEASURE INCREASES OR DECREASES
5006
BEGINING OF STROKE SWITCH IS CLOSED
5
AND
5010
OR
5004
5002
NO
YES
4686
LIMP MODE Vm=1/4V
STOP MOTOR
4688
INDICATE SENSOR FAILURE

FIG. 88

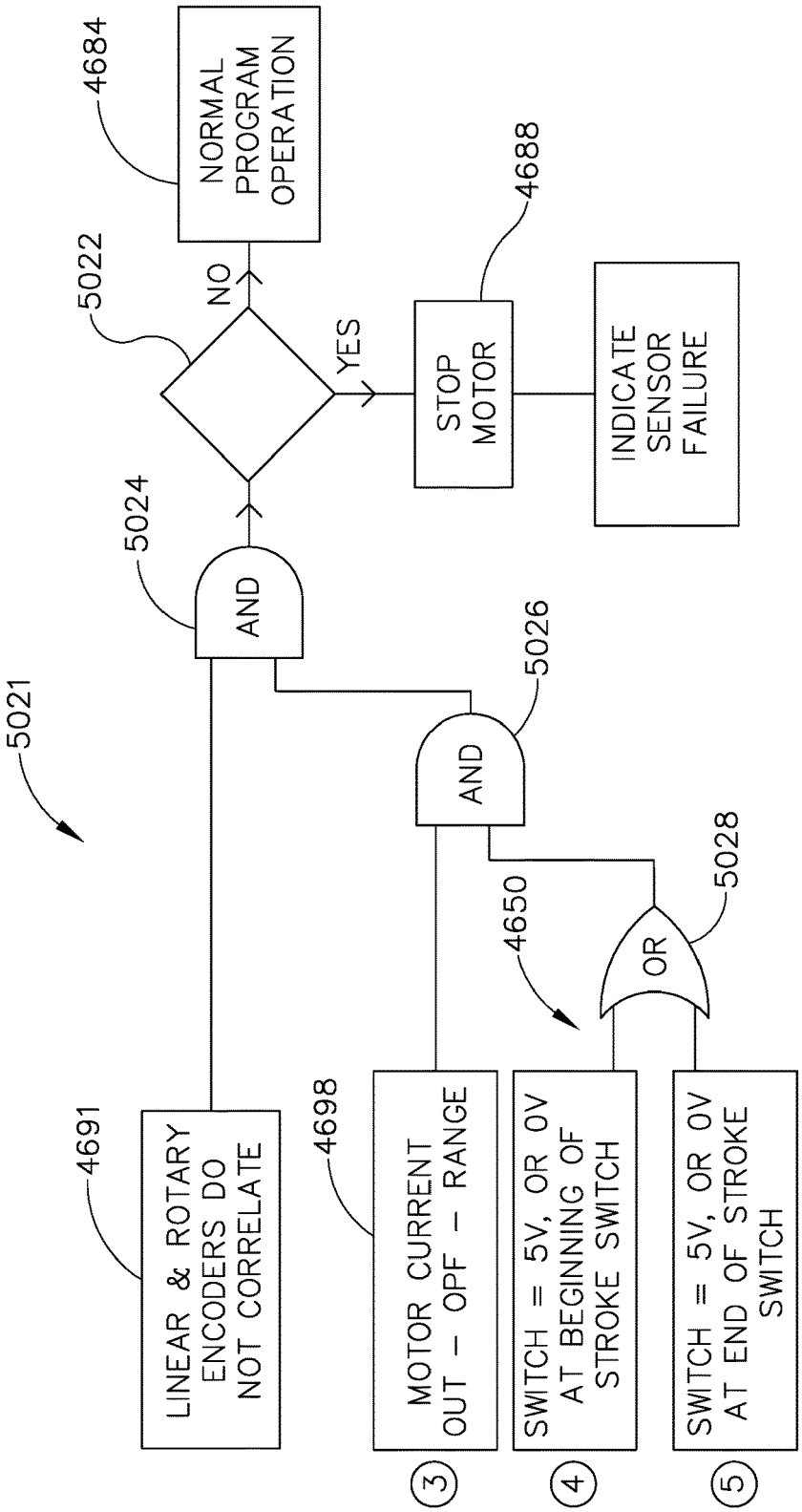
5021
4684
NORMAL PROGRAM OPERATION
5022
NO
YES
4688
STOP MOTOR
INDICATE SENSOR FAILURE
5024
AND
5026
AND
4650
5028
OR
4691
LINEAR & ROTARY ENCODERS DO NOT CORRELATE
4698
MOTOR CURRENT OUT – OPF – RANGE
SWITCH = 5V, OR 0V AT BEGINNING OF STROKE SWITCH
SWITCH = 5V, OR 0V AT END OF STROKE SWITCH
3
4
5

FIG. 89

SURGICAL STAPLING INSTRUMENTS WITH SMART STAPLE CARTRIDGES

BACKGROUND

[0001] The present invention relates to surgical instruments and, in various arrangements, to surgical stapling and cutting instruments and staple cartridges for use therewith that are designed to staple and cut tissue.

BRIEF DESCRIPTION OF THE DRAWINGS

[0002] Various features of the embodiments described herein, together with advantages thereof, may be understood in accordance with the following description taken in conjunction with the accompanying drawings as follows:

[0003] FIG. **1** is a side elevational view of a surgical system comprising a handle assembly and multiple interchangeable surgical tool assemblies that may be used therewith;

[0004] FIG. **2** is a perspective view of one of the interchangeable surgical tool assemblies of FIG. **1** operably coupled to the handle assembly of FIG. **1**;

[0005] FIG. **3** is an exploded assembly view of portions of the handle assembly and interchangeable surgical tool assembly of FIGS. **1** and **2**;

[0006] FIG. **4** is a perspective view of another one of the interchangeable surgical tool assemblies depicted in FIG. **1**;

[0007] FIG. **5** is a partial cross-sectional perspective view of the interchangeable surgical tool assembly of FIG. **4**;

[0008] FIG. **6** is another partial cross-sectional view of a portion of the interchangeable surgical tool assembly of FIGS. **4** and **5**;

[0009] FIG. **7** is an exploded assembly view of a portion of the interchangeable surgical tool assembly of FIGS. **4-6**;

[0010] FIG. **7**A is an enlarged top view of a portion of an elastic spine assembly of the interchangeable surgical tool assembly of FIG. **7**;

[0011] FIG. **8** is another exploded assembly view of a portion of the interchangeable surgical tool assembly of FIGS. **4-7**;

[0012] FIG. **9** is another cross-sectional perspective view of a surgical end effector portion of the interchangeable surgical tool assembly of FIGS. **4-8**;

[0013] FIG. **10** is an exploded assembly view of the surgical end effector portion of the interchangeable surgical tool assembly depicted in FIG. **9**;

[0014] FIG. **11** is a perspective view, a side elevational view and a front elevational view of a firing member embodiment that may be employed in the interchangeable surgical tool assembly of FIG. **10**;

[0015] FIG. **12** is a perspective view of an anvil that may be employed in the interchangeable surgical tool assembly of FIG. **4**;

[0016] FIG. **13** is a cross-sectional side elevational view of the anvil of FIG. **12**;

[0017] FIG. **14** is a bottom view of the anvil of FIGS. **12** and **13**;

[0018] FIG. **15** is a cross-sectional side elevational view of a portion of a surgical end effector and shaft portion of the interchangeable surgical tool assembly of FIG. **4** with an unspent or unfired surgical staple cartridge properly seated with an elongate channel of the surgical end effector;

[0019] FIG. **16** is another cross-sectional side elevational view of the surgical end effector and shaft portion of FIG. **15** after the surgical staple cartridge has been at least partially fired and a firing member thereof is being retracted to a starting position;

[0020] FIG. **17** is another cross-sectional side elevational view of the surgical end effector and shaft portion of FIG. **16** after the firing member has been fully retracted back to the starting position;

[0021] FIG. **18** is a top cross-sectional view of the surgical end effector and shaft portion depicted in FIG. **15** with the unspent or unfired surgical staple cartridge properly seated with the elongate channel of the surgical end effector;

[0022] FIG. **19** is another top cross-sectional view of the surgical end effector of FIG. **18** with a surgical staple cartridge mounted therein that has been at least partially fired and illustrates the firing member retained in a locked position;

[0023] FIG. **20** is a partial cross-sectional view of portions of the anvil and elongate channel of the interchangeable tool assembly of FIG. **4**;

[0024] FIG. **21** is an exploded side elevational view of portions of the anvil and elongate channel of FIG. **20**;

[0025] FIG. **22** is a rear perspective view of an anvil mounting portion of an anvil embodiment;

[0026] FIG. **23** is a rear perspective view of an anvil mounting portion of another anvil embodiment;

[0027] FIG. **24** is a rear perspective view of an anvil mounting portion of another anvil embodiment;

[0028] FIG. **25** is a perspective view of an anvil embodiment;

[0029] FIG. **26** is an exploded perspective view of the anvil of FIG. **25**;

[0030] FIG. **27** is a cross-sectional end view of the anvil of FIG. **25**;

[0031] FIG. **28** is a perspective view of another anvil embodiment;

[0032] FIG. **29** is an exploded perspective view of the anvil embodiment of FIG. **28**;

[0033] FIG. **30** is a top view of a distal end portion of an anvil body portion of the anvil of FIG. **28**;

[0034] FIG. **31** is a top view of a distal end portion of an anvil body portion of another anvil embodiment;

[0035] FIG. **32** is a cross-sectional end perspective view of the anvil of FIG. **31**;

[0036] FIG. **33** is a cross-sectional end perspective view of another anvil embodiment;

[0037] FIG. **34** is a perspective view of a closure member embodiment comprising a distal closure tube segment;

[0038] FIG. **35** is a cross-sectional side elevational view of the closure member embodiment of FIG. **34**;

[0039] FIG. **36** is a partial cross-sectional view of an interchangeable surgical tool assembly embodiment showing a position of an anvil mounting portion of an anvil in a fully closed position and a firing member thereof in a starting position;

[0040] FIG. **37** is another partial cross-sectional view of the interchangeable surgical tool assembly of FIG. **36** at the commencement of an opening process;

[0041] FIG. **38** is another partial cross-sectional view of the interchangeable surgical tool assembly of FIG. **37** with the anvil in the fully opened position;

[0042] FIG. **39** is a side elevational view of a portion of the interchangeable surgical tool assembly of FIG. **36**;

[0043] FIG. **40** is a side elevational view of a portion of the interchangeable surgical tool assembly of FIG. **37**;

[0044] FIG. **41** is a side elevational view of a portion of the interchangeable surgical tool assembly of FIG. **38**;

[0045] FIG. **42** is a cross-sectional side elevational view of another closure member embodiment;

[0046] FIG. **43** is a cross-sectional end view of the closure member of FIG. **42**;

[0047] FIG. **44** is a cross-sectional end view of another closure member embodiment;

[0048] FIG. **45** is a cross-sectional end view of another closure member embodiment;

[0049] FIG. **46** is a cross-sectional end view of another closure member embodiment;

[0050] FIG. **47** is a partial cross-sectional view of portions of a surgical end effector of an interchangeable tool assembly illustrated in FIG. **1**;

[0051] FIG. **48** is a partial cross-sectional view of portions of a surgical end effector of the interchangeable surgical tool assembly of FIG. **5**;

[0052] FIG. **49** is another cross-sectional view of the surgical end effector of FIG. **48**;

[0053] FIG. **50** is a partial perspective view of a portion of an underside of an anvil embodiment;

[0054] FIG. **51** is a partial cross-sectional view of a portion of the interchangeable surgical tool assembly of FIG. **5** with an anvil of a surgical end effector thereof in a fully opened position;

[0055] FIG. **52** is another partial cross-sectional view of a portion of the interchangeable surgical tool assembly of FIG. **51** with the anvil of the surgical end effector thereof in a first closed position;

[0056] FIG. **53** is another partial cross-sectional view of a portion of the interchangeable surgical tool assembly of FIG. **51** at the commencement of the firing process wherein the anvil is in the first closed position and a firing member of the surgical end effector thereof has moved distally out of a starting position;

[0057] FIG. **54** is another partial cross-sectional view of a portion of the interchangeable surgical tool assembly of FIG. **51** wherein the anvil is in a second closed position and the firing member has been distally advanced into a surgical staple cartridge of the surgical end effector thereof;

[0058] FIG. **55** is a graphical comparison of firing energy versus time for different interchangeable surgical tool assemblies;

[0059] FIG. **56** is a graphical depiction of force to fire improvements and comparisons of firing loads verses the percentage of firing distance that the firing member thereof has traveled for four different interchangeable surgical tool assemblies;

[0060] FIG. **57** is a perspective view of an end effector of a surgical stapling instrument including a staple cartridge in accordance with at least one embodiment;

[0061] FIG. **58** is an exploded view of the end effector of FIG. **57**;

[0062] FIG. **59** is a perspective view of the staple cartridge FIG. **57**;

[0063] FIG. **60** is a partial perspective view of a channel of the end effector of FIG. **57** configured to receive the staple cartridge of FIG. **57**;

[0064] FIG. **60**A is a partial perspective view of the channel of FIG. **60**;

[0065] FIG. **60**B is a circuit diagram of a cartridge circuit of the staple cartridge of FIG. **59**;

[0066] FIG. **60**C is a circuit diagram of a carrier circuit of the end effector of FIG. **57**;

[0067] FIG. **61** is a bottom partial view of the end effector of FIG. **57** illustrating an intact trace element and a sled in a starting position in accordance with at least one embodiment;

[0068] FIG. **62** is a bottom partial view of the end effector of FIG. **57** illustrating a broken trace element and a sled in a partially advanced position in accordance with at least one embodiment;

[0069] FIG. **62**A is a block diagram illustrating an electrical circuit in accordance with at least one embodiment;

[0070] FIG. **62**B is a block diagram illustrating an electrical circuit in accordance with at least one embodiment;

[0071] FIG. **62**C is a block diagram illustrating an electrical circuit in accordance with at least one embodiment;

[0072] FIG. **62**D is a block diagram illustrating an electrical circuit in accordance with at least one embodiment;

[0073] FIG. **63** is a circuit diagram of a safety mechanism of the end effector of FIG. **57** in accordance with at least one embodiment;

[0074] FIG. **64** is a switch of the circuit diagram of FIG. **63** in an open configuration in accordance with at least one embodiment;

[0075] FIG. **65** illustrates the switch of FIG. **64** in a closed configuration;

[0076] FIG. **65**A is a safety mechanism of the end effector of FIG. **57** in accordance with at least one embodiment;

[0077] FIG. **65**B is a logic diagram of a method for controlling the firing of a surgical stapling and cutting instrument in accordance with at least one embodiment;

[0078] FIG. **66** is a partial perspective view of a staple cartridge including a conductive gate in accordance with at least one embodiment;

[0079] FIG. **67** is a partial exploded view of the staple cartridge of FIG. **66**;

[0080] FIG. **68** is a cross-sectional view of the staple cartridge of FIG. **67** showing the conductive gate in a fully closed configuration;

[0081] FIG. **69** is a cross-sectional view of the staple cartridge of FIG. **67** showing the conductive gate in an open configuration;

[0082] FIG. **70** is a cross-sectional view of the staple cartridge of FIG. **67** showing the conductive gate transitioning from an open configuration to a partially closed configuration;

[0083] FIG. **71** is a block diagram illustrating an electrical circuit configured to activate/deactivate a firing system of a surgical stapling and cutting instrument in accordance with at least one embodiment;

[0084] FIG. **72** illustrates a controller a surgical stapling and cutting instrument in accordance with at least one embodiment;

[0085] FIG. **73** illustrates a combinational logic circuit of a surgical stapling and cutting instrument in accordance with at least one embodiment;

[0086] FIG. **74** illustrates a sequential logic circuit of a surgical stapling and cutting instrument in accordance with at least one embodiment;

[0087] FIG. **75** is an electromagnetic lockout mechanism for a surgical stapling and cutting instrument in accordance with at least one embodiment;

[0088] FIG. **76** illustrates the electromagnetic lockout mechanism of FIG. **75** in a locked configuration;

[0089] FIG. **77** illustrates the electromagnetic lockout mechanism of FIG. **75** in an unlocked configuration;

[0090] FIG. **78** is a circuit diagram of an electrical circuit in accordance with at least one embodiment;

[0091] FIG. **79** is a circuit diagram of an electrical circuit of a powered surgical stapling and cutting instrument in accordance with at least one embodiment;

[0092] FIG. **79**A is an electrical circuit configured to detect the position and progression of a staple firing member illustrating the staple firing member in a fully fired position;

[0093] FIG. **79**B illustrates the staple firing member of FIG. **79**A in a fully retracted position;

[0094] FIG. **80** is a perspective view of a powered surgical stapling and cutting instrument comprising a power assembly, a handle assembly, and an interchangeable shaft assembly;

[0095] FIG. **81** is perspective view of the surgical instrument of FIG. **80** with the interchangeable shaft assembly separated from the handle assembly;

[0096] FIGS. **82**A and **82**B depict a circuit diagram of the surgical instrument of FIG. **80**;

[0097] FIG. **83** is a circuit diagram of a powered surgical stapling and cutting instrument in accordance with at least one embodiment;

[0098] FIG. **84**A is a circuit diagram of a powered surgical stapling and cutting instrument in accordance with at least one embodiment;

[0099] FIG. **84**B illustrates minimum and maximum thresholds of current drawn by a motor of a powered surgical stapling and cutting instrument in accordance with at least one embodiment;

[0100] FIG. **85** is circuit diagram illustrating a beginning-of-stroke switch circuit and an end-of-stroke switch circuit with at least one embodiment;

[0101] FIG. **86** is logic diagram illustrating a failure response system in accordance with at least one embodiment;

[0102] FIG. **87** is logic diagram illustrating a failure response system in accordance with at least one embodiment;

[0103] FIG. **88** is logic diagram illustrating a failure response system in accordance with at least one embodiment; and

[0104] FIG. **89** is logic diagram illustrating a failure response system in accordance with at least one embodiment.

[0105] Corresponding reference characters indicate corresponding parts throughout the several views. The exemplifications set out herein illustrate various embodiments of the invention, in one form, and such exemplifications are not to be construed as limiting the scope of the invention in any manner.

DETAILED DESCRIPTION

[0106] Applicant of the present application owns the following U.S. patent applications that were filed on Dec. 21, 2016 and which are each herein incorporated by reference in their respective entireties:

[0107] U.S. patent application Ser. No. 15/386,185, entitled SURGICAL STAPLING INSTRUMENTS AND REPLACEABLE TOOL ASSEMBLIES THEREOF;

[0108] U.S. patent application Ser. No. 15/386,230, entitled ARTICULATABLE SURGICAL STAPLING INSTRUMENTS;

[0109] U.S. patent application Ser. No. 15/386,221, entitled LOCKOUT ARRANGEMENTS FOR SURGICAL END EFFECTORS;

[0110] U.S. patent application Ser. No. 15/386,209, entitled SURGICAL END EFFECTORS AND FIRING MEMBERS THEREOF;

[0111] U.S. patent application Ser. No. 15/386,198, entitled LOCKOUT ARRANGEMENTS FOR SURGICAL END EFFECTORS AND REPLACEABLE TOOL ASSEMBLIES; and

[0112] U.S. patent application Ser. No. 15/386,240, entitled SURGICAL END EFFECTORS AND ADAPTABLE FIRING MEMBERS THEREFOR.

[0113] Applicant of the present application owns the following U.S. patent applications that were filed on Dec. 21, 2016 and which are each herein incorporated by reference in their respective entireties:

[0114] U.S. patent application Ser. No. 15/385,939, entitled STAPLE CARTRIDGES AND ARRANGEMENTS OF STAPLES AND STAPLE CAVITIES THEREIN;

[0115] U.S. patent application Ser. No. 15/385,941, entitled SURGICAL TOOL ASSEMBLIES WITH CLUTCHING ARRANGEMENTS FOR SHIFTING BETWEEN CLOSURE SYSTEMS WITH CLOSURE STROKE REDUCTION FEATURES AND ARTICULATION AND FIRING SYSTEMS;

[0116] U.S. patent application Ser. No. 15/385,943, entitled SURGICAL STAPLING INSTRUMENTS AND STAPLE-FORMING ANVILS;

[0117] U.S. patent application Ser. No. 15/385,950, entitled SURGICAL TOOL ASSEMBLIES WITH CLOSURE STROKE REDUCTION FEATURES;

[0118] U.S. patent application Ser. No. 15/385,945, entitled STAPLE CARTRIDGES AND ARRANGEMENTS OF STAPLES AND STAPLE CAVITIES THEREIN;

[0119] U.S. patent application Ser. No. 15/385,946, entitled SURGICAL STAPLING INSTRUMENTS AND STAPLE-FORMING ANVILS;

[0120] U.S. patent application Ser. No. 15/385,951, entitled SURGICAL INSTRUMENTS WITH JAW OPENING FEATURES FOR INCREASING A JAW OPENING DISTANCE;

[0121] U.S. patent application Ser. No. 15/385,953, entitled METHODS OF STAPLING TISSUE;

[0122] U.S. patent application Ser. No. 15/385,954, entitled FIRING MEMBERS WITH NON-PARALLEL JAW ENGAGEMENT FEATURES FOR SURGICAL END EFFECTORS;

[0123] U.S. patent application Ser. No. 15/385,955, entitled SURGICAL END EFFECTORS WITH EXPANDABLE TISSUE STOP ARRANGEMENTS;

[0124] U.S. patent application Ser. No. 15/385,948, entitled SURGICAL STAPLING INSTRUMENTS AND STAPLE-FORMING ANVILS;

[0125] U.S. patent application Ser. No. 15/385,956, entitled SURGICAL INSTRUMENTS WITH POSITIVE JAW OPENING FEATURES;

[0126] U.S. patent application Ser. No. 15/385,958, entitled SURGICAL INSTRUMENTS WITH LOCK-

OUT ARRANGEMENTS FOR PREVENTING FIRING SYSTEM ACTUATION UNLESS AN UNSPENT STAPLE CARTRIDGE IS PRESENT; and

[0127] U.S. patent application Ser. No. 15/385,947, entitled STAPLE CARTRIDGES AND ARRANGEMENTS OF STAPLES AND STAPLE CAVITIES THEREIN.

[0128] Applicant of the present application owns the following U.S. patent applications that were filed on Dec. 21, 2016 and which are each herein incorporated by reference in their respective entireties:

[0129] U.S. patent application Ser. No. 15/385,896, entitled METHOD FOR RESETTING A FUSE OF A SURGICAL INSTRUMENT SHAFT;

[0130] U.S. patent application Ser. No. 15/385,898, entitled STAPLE FORMING POCKET ARRANGEMENT TO ACCOMMODATE DIFFERENT TYPES OF STAPLES;

[0131] U.S. patent application Ser. No. 15/385,899, entitled SURGICAL INSTRUMENT COMPRISING IMPROVED JAW CONTROL;

[0132] U.S. patent application Ser. No. 15/385,901, entitled STAPLE CARTRIDGE AND STAPLE CARTRIDGE CHANNEL COMPRISING WINDOWS DEFINED THEREIN;

[0133] U.S. patent application Ser. No. 15/385,902, entitled SURGICAL INSTRUMENT COMPRISING A CUTTING MEMBER;

[0134] U.S. patent application Ser. No. 15/385,904, entitled STAPLE FIRING MEMBER COMPRISING A MISSING CARTRIDGE AND/OR SPENT CARTRIDGE LOCKOUT;

[0135] U.S. patent application Ser. No. 15/385,905, entitled FIRING ASSEMBLY COMPRISING A LOCKOUT;

[0136] U.S. patent application Ser. No. 15/385,907, entitled SURGICAL INSTRUMENT SYSTEM COMPRISING AN END EFFECTOR LOCKOUT AND A FIRING ASSEMBLY LOCKOUT;

[0137] U.S. patent application Ser. No. 15/385,908, entitled FIRING ASSEMBLY COMPRISING A FUSE; and

[0138] U.S. patent application Ser. No. 15/385,909, entitled FIRING ASSEMBLY COMPRISING A MULTIPLE FAILED-STATE FUSE.

[0139] Applicant of the present application owns the following U.S. patent applications that were filed on Dec. 21, 2016 and which are each herein incorporated by reference in their respective entireties:

[0140] U.S. patent application Ser. No. 15/385,920, entitled STAPLE FORMING POCKET ARRANGEMENTS;

[0141] U.S. patent application Ser. No. 15/385,913, entitled ANVIL ARRANGEMENTS FOR SURGICAL STAPLERS;

[0142] U.S. patent application Ser. No. 15/385,914, entitled METHOD OF DEFORMING STAPLES FROM TWO DIFFERENT TYPES OF STAPLE CARTRIDGES WITH THE SAME SURGICAL STAPLING INSTRUMENT;

[0143] U.S. patent application Ser. No. 15/385,893, entitled BILATERALLY ASYMMETRIC STAPLE FORMING POCKET PAIRS;

[0144] U.S. patent application Ser. No. 15/385,929, entitled CLOSURE MEMBERS WITH CAM SURFACE ARRANGEMENTS FOR SURGICAL INSTRUMENTS WITH SEPARATE AND DISTINCT CLOSURE AND FIRING SYSTEMS;

[0145] U.S. patent application Ser. No. 15/385,911, entitled SURGICAL STAPLERS WITH INDEPENDENTLY ACTUATABLE CLOSING AND FIRING SYSTEMS;

[0146] U.S. patent application Ser. No. 15/385,917, entitled STAPLE CARTRIDGE COMPRISING STAPLES WITH DIFFERENT CLAMPING BREADTHS;

[0147] U.S. patent application Ser. No. 15/385,900, entitled STAPLE FORMING POCKET ARRANGEMENTS COMPRISING PRIMARY SIDEWALLS AND POCKET SIDEWALLS;

[0148] U.S. patent application Ser. No. 15/385,931, entitled NO-CARTRIDGE AND SPENT CARTRIDGE LOCKOUT ARRANGEMENTS FOR SURGICAL STAPLERS;

[0149] U.S. patent application Ser. No. 15/385,915, entitled FIRING MEMBER PIN ANGLE;

[0150] U.S. patent application Ser. No. 15/385,897, entitled STAPLE FORMING POCKET ARRANGEMENTS COMPRISING ZONED FORMING SURFACE GROOVES;

[0151] U.S. patent application Ser. No. 15/385,922, entitled SURGICAL INSTRUMENT WITH MULTIPLE FAILURE RESPONSE MODES;

[0152] U.S. patent application Ser. No. 15/385,924, entitled SURGICAL INSTRUMENT WITH PRIMARY AND SAFETY PROCESSORS;

[0153] U.S. patent application Ser. No. 15/385,912, entitled SURGICAL INSTRUMENTS WITH JAWS THAT ARE PIVOTABLE ABOUT A FIXED AXIS AND INCLUDE SEPARATE AND DISTINCT CLOSURE AND FIRING SYSTEMS;

[0154] U.S. patent application Ser. No. 15/385,910, entitled ANVIL HAVING A KNIFE SLOT WIDTH;

[0155] U.S. patent application Ser. No. 15/385,903, entitled CLOSURE MEMBER ARRANGEMENTS FOR SURGICAL INSTRUMENTS; and

[0156] U.S. patent application Ser. No. 15/385,906, entitled FIRING MEMBER PIN CONFIGURATIONS.

[0157] Applicant of the present application owns the following U.S. patent applications that were filed on Dec. 21, 2016 and which are each herein incorporated by reference in their respective entireties:

[0158] U.S. patent application Ser. No. 15/386,188, entitled STEPPED STAPLE CARTRIDGE WITH ASYMMETRICAL STAPLES;

[0159] U.S. patent application Ser. No. 15/386,192, entitled STEPPED STAPLE CARTRIDGE WITH TISSUE RETENTION AND GAP SETTING FEATURES;

[0160] U.S. patent application Ser. No. 15/386,206, entitled STAPLE CARTRIDGE WITH DEFORMABLE DRIVER RETENTION FEATURES;

[0161] U.S. patent application Ser. No. 15/386,226, entitled DURABILITY FEATURES FOR END EFFECTORS AND FIRING ASSEMBLIES OF SURGICAL STAPLING INSTRUMENTS;

[0162] U.S. patent application Ser. No. 15/386,222, entitled SURGICAL STAPLING INSTRUMENTS

HAVING END EFFECTORS WITH POSITIVE OPENING FEATURES; and

[0163] U.S. patent application Ser. No. 15/386,236, entitled CONNECTION PORTIONS FOR DISPOSABLE LOADING UNITS FOR SURGICAL STAPLING INSTRUMENTS.

[0164] Applicant of the present application owns the following U.S. patent applications that were filed on Dec. 21, 2016 and which are each herein incorporated by reference in their respective entireties:

[0165] U.S. patent application Ser. No. 15/385,887, entitled METHOD FOR ATTACHING A SHAFT ASSEMBLY TO A SURGICAL INSTRUMENT AND, ALTERNATIVELY, TO A SURGICAL ROBOT;

[0166] U.S. patent application Ser. No. 15/385,889, entitled SHAFT ASSEMBLY COMPRISING A MANUALLY-OPERABLE RETRACTION SYSTEM FOR USE WITH A MOTORIZED SURGICAL INSTRUMENT SYSTEM;

[0167] U.S. patent application Ser. No. 15/385,890, entitled SHAFT ASSEMBLY COMPRISING SEPARATELY ACTUATABLE AND RETRACTABLE SYSTEMS;

[0168] U.S. patent application Ser. No. 15/385,891, entitled SHAFT ASSEMBLY COMPRISING A CLUTCH CONFIGURED TO ADAPT THE OUTPUT OF A ROTARY FIRING MEMBER TO TWO DIFFERENT SYSTEMS;

[0169] U.S. patent application Ser. No. 15/385,892, entitled SURGICAL SYSTEM COMPRISING A FIRING MEMBER ROTATABLE INTO AN ARTICULATION STATE TO ARTICULATE AN END EFFECTOR OF THE SURGICAL SYSTEM;

[0170] U.S. patent application Ser. No. 15/385,894, entitled SHAFT ASSEMBLY COMPRISING A LOCKOUT; and

[0171] U.S. patent application Ser. No. 15/385,895, entitled SHAFT ASSEMBLY COMPRISING FIRST AND SECOND ARTICULATION LOCKOUTS.

[0172] Applicant of the present application owns the following U.S. patent applications that were filed on Dec. 21, 2016 and which are each herein incorporated by reference in their respective entireties:

[0173] U.S. patent application Ser. No. 15/385,916, entitled SURGICAL STAPLING SYSTEMS;

[0174] U.S. patent application Ser. No. 15/385,918, entitled SURGICAL STAPLING SYSTEMS;

[0175] U.S. patent application Ser. No. 15/385,919, entitled SURGICAL STAPLING SYSTEMS;

[0176] U.S. patent application Ser. No. 15/385,921, entitled SURGICAL STAPLE CARTRIDGE WITH MOVABLE CAMMING MEMBER CONFIGURED TO DISENGAGE FIRING MEMBER LOCKOUT FEATURES;

[0177] U.S. patent application Ser. No. 15/385,923, entitled SURGICAL STAPLING SYSTEMS;

[0178] U.S. patent application Ser. No. 15/385,925, entitled JAW ACTUATED LOCK ARRANGEMENTS FOR PREVENTING ADVANCEMENT OF A FIRING MEMBER IN A SURGICAL END EFFECTOR UNLESS AN UNFIRED CARTRIDGE IS INSTALLED IN THE END EFFECTOR;

[0179] U.S. patent application Ser. No. 15/385,926, entitled AXIALLY MOVABLE CLOSURE SYSTEM ARRANGEMENTS FOR APPLYING CLOSURE MOTIONS TO JAWS OF SURGICAL INSTRUMENTS;

[0180] U.S. patent application Ser. No. 15/385,928, entitled PROTECTIVE COVER ARRANGEMENTS FOR A JOINT INTERFACE BETWEEN A MOVABLE JAW AND ACTUATOR SHAFT OF A SURGICAL INSTRUMENT;

[0181] U.S. patent application Ser. No. 15/385,930, entitled SURGICAL END EFFECTOR WITH TWO SEPARATE COOPERATING OPENING FEATURES FOR OPENING AND CLOSING END EFFECTOR JAWS;

[0182] U.S. patent application Ser. No. 15/385,932, entitled ARTICULATABLE SURGICAL END EFFECTOR WITH ASYMMETRIC SHAFT ARRANGEMENT;

[0183] U.S. patent application Ser. No. 15/385,933, entitled ARTICULATABLE SURGICAL INSTRUMENT WITH INDEPENDENT PIVOTABLE LINKAGE DISTAL OF AN ARTICULATION LOCK;

[0184] U.S. patent application Ser. No. 15/385,934, entitled ARTICULATION LOCK ARRANGEMENTS FOR LOCKING AN END EFFECTOR IN AN ARTICULATED POSITION IN RESPONSE TO ACTUATION OF A JAW CLOSURE SYSTEM;

[0185] U.S. patent application Ser. No. 15/385,935, entitled LATERALLY ACTUATABLE ARTICULATION LOCK ARRANGEMENTS FOR LOCKING AN END EFFECTOR OF A SURGICAL INSTRUMENT IN AN ARTICULATED CONFIGURATION; and

[0186] U.S. patent application Ser. No. 15/385,936, entitled ARTICULATABLE SURGICAL INSTRUMENTS WITH ARTICULATION STROKE AMPLIFICATION FEATURES.

[0187] Applicant of the present application owns the following U.S. patent applications that were filed on Jun. 24, 2016 and which are each herein incorporated by reference in their respective entireties:

[0188] U.S. patent application Ser. No. 15/191,775, entitled STAPLE CARTRIDGE COMPRISING WIRE STAPLES AND STAMPED STAPLES;

[0189] U.S. patent application Ser. No. 15/191,807, entitled STAPLING SYSTEM FOR USE WITH WIRE STAPLES AND STAMPED STAPLES;

[0190] U.S. patent application Ser. No. 15/191,834, entitled STAMPED STAPLES AND STAPLE CARTRIDGES USING THE SAME;

[0191] U.S. patent application Ser. No. 15/191,788, entitled STAPLE CARTRIDGE COMPRISING OVERDRIVEN STAPLES; and

[0192] U.S. patent application Ser. No. 15/191,818, entitled STAPLE CARTRIDGE COMPRISING OFFSET LONGITUDINAL STAPLE ROWS.

[0193] Applicant of the present application owns the following U.S. patent applications that were filed on Jun. 24, 2016 and which are each herein incorporated by reference in their respective entireties:

[0194] U.S. Design patent application Ser. No. 29/569,218, entitled SURGICAL FASTENER;

[0195] U.S. Design patent application Ser. No. 29/569,227, entitled SURGICAL FASTENER;

[0196] U.S. Design patent application Ser. No. 29/569,259, entitled SURGICAL FASTENER CARTRIDGE; and

[0197] U.S. Design patent application Ser. No. 29/569,264, entitled SURGICAL FASTENER CARTRIDGE.

[0198] Applicant of the present application owns the following patent applications that were filed on Apr. 1, 2016 and which are each herein incorporated by reference in their respective entirety:

[0199] U.S. patent application Ser. No. 15/089,325, entitled METHOD FOR OPERATING A SURGICAL STAPLING SYSTEM;

[0200] U.S. patent application Ser. No. 15/089,321, entitled MODULAR SURGICAL STAPLING SYSTEM COMPRISING A DISPLAY;

[0201] U.S. patent application Ser. No. 15/089,326, entitled SURGICAL STAPLING SYSTEM COMPRISING A DISPLAY INCLUDING A RE-ORIENTABLE DISPLAY FIELD;

[0202] U.S. patent application Ser. No. 15/089,263, entitled SURGICAL INSTRUMENT HANDLE ASSEMBLY WITH RECONFIGURABLE GRIP PORTION;

[0203] U.S. patent application Ser. No. 15/089,262, entitled ROTARY POWERED SURGICAL INSTRUMENT WITH MANUALLY ACTUATABLE BAILOUT SYSTEM;

[0204] U.S. patent application Ser. No. 15/089,277, entitled SURGICAL CUTTING AND STAPLING END EFFECTOR WITH ANVIL CONCENTRIC DRIVE MEMBER;

[0205] U.S. patent application Ser. No. 15/089,296, entitled INTERCHANGEABLE SURGICAL TOOL ASSEMBLY WITH A SURGICAL END EFFECTOR THAT IS SELECTIVELY ROTATABLE ABOUT A SHAFT AXIS;

[0206] U.S. patent application Ser. No. 15/089,258, entitled SURGICAL STAPLING SYSTEM COMPRISING A SHIFTABLE TRANSMISSION;

[0207] U.S. patent application Ser. No. 15/089,278, entitled SURGICAL STAPLING SYSTEM CONFIGURED TO PROVIDE SELECTIVE CUTTING OF TISSUE;

[0208] U.S. patent application Ser. No. 15/089,284, entitled SURGICAL STAPLING SYSTEM COMPRISING A CONTOURABLE SHAFT;

[0209] U.S. patent application Ser. No. 15/089,295, entitled SURGICAL STAPLING SYSTEM COMPRISING A TISSUE COMPRESSION LOCKOUT;

[0210] U.S. patent application Ser. No. 15/089,300, entitled SURGICAL STAPLING SYSTEM COMPRISING AN UNCLAMPING LOCKOUT;

[0211] U.S. patent application Ser. No. 15/089,196, entitled SURGICAL STAPLING SYSTEM COMPRISING A JAW CLOSURE LOCKOUT;

[0212] U.S. patent application Ser. No. 15/089,203, entitled SURGICAL STAPLING SYSTEM COMPRISING A JAW ATTACHMENT LOCKOUT;

[0213] U.S. patent application Ser. No. 15/089,210, entitled SURGICAL STAPLING SYSTEM COMPRISING A SPENT CARTRIDGE LOCKOUT;

[0214] U.S. patent application Ser. No. 15/089,324, entitled SURGICAL INSTRUMENT COMPRISING A SHIFTING MECHANISM;

[0215] U.S. patent application Ser. No. 15/089,335, entitled SURGICAL STAPLING INSTRUMENT COMPRISING MULTIPLE LOCKOUTS;

[0216] U.S. patent application Ser. No. 15/089,339, entitled SURGICAL STAPLING INSTRUMENT;

[0217] U.S. patent application Ser. No. 15/089,253, entitled SURGICAL STAPLING SYSTEM CONFIGURED TO APPLY ANNULAR ROWS OF STAPLES HAVING DIFFERENT HEIGHTS;

[0218] U.S. patent application Ser. No. 15/089,304, entitled SURGICAL STAPLING SYSTEM COMPRISING A GROOVED FORMING POCKET;

[0219] U.S. patent application Ser. No. 15/089,331, entitled ANVIL MODIFICATION MEMBERS FOR SURGICAL STAPLERS;

[0220] U.S. patent application Ser. No. 15/089,336, entitled STAPLE CARTRIDGES WITH ATRAUMATIC FEATURES;

[0221] U.S. patent application Ser. No. 15/089,312, entitled CIRCULAR STAPLING SYSTEM COMPRISING AN INCISABLE TISSUE SUPPORT;

[0222] U.S. patent application Ser. No. 15/089,309, entitled CIRCULAR STAPLING SYSTEM COMPRISING ROTARY FIRING SYSTEM; and

[0223] U.S. patent application Ser. No. 15/089,349, entitled CIRCULAR STAPLING SYSTEM COMPRISING LOAD CONTROL.

[0224] Applicant of the present application also owns the U.S. patent applications identified below which were filed on Dec. 31, 2015 which are each herein incorporated by reference in their respective entirety:

[0225] U.S. patent application Ser. No. 14/984,488, entitled MECHANISMS FOR COMPENSATING FOR BATTERY PACK FAILURE IN POWERED SURGICAL INSTRUMENTS;

[0226] U.S. patent application Ser. No. 14/984,525, entitled MECHANISMS FOR COMPENSATING FOR DRIVETRAIN FAILURE IN POWERED SURGICAL INSTRUMENTS; and

[0227] U.S. patent application Ser. No. 14/984,552, entitled SURGICAL INSTRUMENTS WITH SEPARABLE MOTORS AND MOTOR CONTROL CIRCUITS.

[0228] Applicant of the present application also owns the U.S. patent applications identified below which were filed on Feb. 9, 2016 which are each herein incorporated by reference in their respective entirety:

[0229] U.S. patent application Ser. No. 15/019,220, entitled SURGICAL INSTRUMENT WITH ARTICULATING AND AXIALLY TRANSLATABLE END EFFECTOR;

[0230] U.S. patent application Ser. No. 15/019,228, entitled SURGICAL INSTRUMENTS WITH MULTIPLE LINK ARTICULATION ARRANGEMENTS;

[0231] U.S. patent application Ser. No. 15/019,196, entitled SURGICAL INSTRUMENT ARTICULATION MECHANISM WITH SLOTTED SECONDARY CONSTRAINT;

[0232] U.S. patent application Ser. No. 15/019,206, entitled SURGICAL INSTRUMENTS WITH AN END EFFECTOR THAT IS HIGHLY ARTICULATABLE RELATIVE TO AN ELONGATE SHAFT ASSEMBLY;

[0233] U.S. patent application Ser. No. 15/019,215, entitled SURGICAL INSTRUMENTS WITH NON-SYMMETRICAL ARTICULATION ARRANGEMENTS;

[0234] U.S. patent application Ser. No. 15/019,227, entitled ARTICULATABLE SURGICAL INSTRUMENTS WITH SINGLE ARTICULATION LINK ARRANGEMENTS;

[0235] U.S. patent application Ser. No. 15/019,235, entitled SURGICAL INSTRUMENTS WITH TENSIONING ARRANGEMENTS FOR CABLE DRIVEN ARTICULATION SYSTEMS;

[0236] U.S. patent application Ser. No. 15/019,230, entitled ARTICULATABLE SURGICAL INSTRUMENTS WITH OFF-AXIS FIRING BEAM ARRANGEMENTS; and

[0237] U.S. patent application Ser. No. 15/019,245, entitled SURGICAL INSTRUMENTS WITH CLOSURE STROKE REDUCTION ARRANGEMENTS.

[0238] Applicant of the present application also owns the U.S. patent applications identified below which were filed on Feb. 12, 2016 which are each herein incorporated by reference in their respective entirety:

[0239] U.S. patent application Ser. No. 15/043,254, entitled MECHANISMS FOR COMPENSATING FOR DRIVETRAIN FAILURE IN POWERED SURGICAL INSTRUMENTS;

[0240] U.S. patent application Ser. No. 15/043,259, entitled MECHANISMS FOR COMPENSATING FOR DRIVETRAIN FAILURE IN POWERED SURGICAL INSTRUMENTS;

[0241] U.S. patent application Ser. No. 15/043,275, entitled MECHANISMS FOR COMPENSATING FOR DRIVETRAIN FAILURE IN POWERED SURGICAL INSTRUMENTS; and

[0242] U.S. patent application Ser. No. 15/043,289, entitled MECHANISMS FOR COMPENSATING FOR DRIVETRAIN FAILURE IN POWERED SURGICAL INSTRUMENTS.

[0243] Applicant of the present application owns the following patent applications that were filed on Jun. 18, 2015 and which are each herein incorporated by reference in their respective entirety:

[0244] U.S. patent application Ser. No. 14/742,925, entitled SURGICAL END EFFECTORS WITH POSITIVE JAW OPENING ARRANGEMENTS;

[0245] U.S. patent application Ser. No. 14/742,941, entitled SURGICAL END EFFECTORS WITH DUAL CAM ACTUATED JAW CLOSING FEATURES;

[0246] U.S. patent application Ser. No. 14/742,914, entitled MOVABLE FIRING BEAM SUPPORT ARRANGEMENTS FOR ARTICULATABLE SURGICAL INSTRUMENTS;

[0247] U.S. patent application Ser. No. 14/742,900, entitled ARTICULATABLE SURGICAL INSTRUMENTS WITH COMPOSITE FIRING BEAM STRUCTURES WITH CENTER FIRING SUPPORT MEMBER FOR ARTICULATION SUPPORT;

[0248] U.S. patent application Ser. No. 14/742,885, entitled DUAL ARTICULATION DRIVE SYSTEM ARRANGEMENTS FOR ARTICULATABLE SURGICAL INSTRUMENTS; and

[0249] U.S. patent application Ser. No. 14/742,876, entitled PUSH/PULL ARTICULATION DRIVE SYSTEMS FOR ARTICULATABLE SURGICAL INSTRUMENTS.

[0250] Applicant of the present application owns the following patent applications that were filed on Mar. 6, 2015 and which are each herein incorporated by reference in their respective entirety:

[0251] U.S. patent application Ser. No. 14/640,746, entitled POWERED SURGICAL INSTRUMENT, now U.S. Patent Application Publication No. 2016/0256184;

[0252] U.S. patent application Ser. No. 14/640,795, entitled MULTIPLE LEVEL THRESHOLDS TO MODIFY OPERATION OF POWERED SURGICAL INSTRUMENTS, now U.S. Patent Application Publication No. 2016/02561185;

[0253] U.S. patent application Ser. No. 14/640,832, entitled ADAPTIVE TISSUE COMPRESSION TECHNIQUES TO ADJUST CLOSURE RATES FOR MULTIPLE TISSUE TYPES, now U.S. Patent Application Publication No. 2016/0256154;

[0254] U.S. patent application Ser. No. 14/640,935, entitled OVERLAID MULTI SENSOR RADIO FREQUENCY (RF) ELECTRODE SYSTEM TO MEASURE TISSUE COMPRESSION, now U.S. Patent Application Publication No. 2016/0256071;

[0255] U.S. patent application Ser. No. 14/640,831, entitled MONITORING SPEED CONTROL AND PRECISION INCREMENTING OF MOTOR FOR POWERED SURGICAL INSTRUMENTS, now U.S. Patent Application Publication No. 2016/0256153;

[0256] U.S. patent application Ser. No. 14/640,859, entitled TIME DEPENDENT EVALUATION OF SENSOR DATA TO DETERMINE STABILITY, CREEP, AND VISCOELASTIC ELEMENTS OF MEASURES, now U.S. Patent Application Publication No. 2016/0256187;

[0257] U.S. patent application Ser. No. 14/640,817, entitled INTERACTIVE FEEDBACK SYSTEM FOR POWERED SURGICAL INSTRUMENTS, now U.S. Patent Application Publication No. 2016/0256186;

[0258] U.S. patent application Ser. No. 14/640,844, entitled CONTROL TECHNIQUES AND SUB-PROCESSOR CONTAINED WITHIN MODULAR SHAFT WITH SELECT CONTROL PROCESSING FROM HANDLE, now U.S. Patent Application Publication No. 2016/0256155;

[0259] U.S. patent application Ser. No. 14/640,837, entitled SMART SENSORS WITH LOCAL SIGNAL PROCESSING, now U.S. Patent Application Publication No. 2016/0256163;

[0260] U.S. patent application Ser. No. 14/640,765, entitled SYSTEM FOR DETECTING THE MIS-INSERTION OF A STAPLE CARTRIDGE INTO A SURGICAL STAPLER, now U.S. Patent Application Publication No. 2016/0256160;

[0261] U.S. patent application Ser. No. 14/640,799, entitled SIGNAL AND POWER COMMUNICATION SYSTEM POSITIONED ON A ROTATABLE SHAFT, now U.S. Patent Application Publication No. 2016/0256162; and

[0262] U.S. patent application Ser. No. 14/640,780, entitled SURGICAL INSTRUMENT COMPRISING

A LOCKABLE BATTERY HOUSING, now U.S. Patent Application Publication No. 2016/0256161.

[0263] Applicant of the present application owns the following patent applications that were filed on Feb. 27, 2015, and which are each herein incorporated by reference in their respective entirety:

[0264] U.S. patent application Ser. No. 14/633,576, entitled SURGICAL INSTRUMENT SYSTEM COMPRISING AN INSPECTION STATION, now U.S. Patent Application Publication No. 2016/0249919;

[0265] U.S. patent application Ser. No. 14/633,546, entitled SURGICAL APPARATUS CONFIGURED TO ASSESS WHETHER A PERFORMANCE PARAMETER OF THE SURGICAL APPARATUS IS WITHIN AN ACCEPTABLE PERFORMANCE BAND, now U.S. Patent Application Publication No. 2016/0249915;

[0266] U.S. patent application Ser. No. 14/633,560, entitled SURGICAL CHARGING SYSTEM THAT CHARGES AND/OR CONDITIONS ONE OR MORE BATTERIES, now U.S. Patent Application Publication No. 2016/0249910;

[0267] U.S. patent application Ser. No. 14/633,566, entitled CHARGING SYSTEM THAT ENABLES EMERGENCY RESOLUTIONS FOR CHARGING A BATTERY, now U.S. Patent Application Publication No. 2016/0249918;

[0268] U.S. patent application Ser. No. 14/633,555, entitled SYSTEM FOR MONITORING WHETHER A SURGICAL INSTRUMENT NEEDS TO BE SERVICED, now U.S. Patent Application Publication No. 2016/0249916;

[0269] U.S. patent application Ser. No. 14/633,542, entitled REINFORCED BATTERY FOR A SURGICAL INSTRUMENT, now U.S. Patent Application Publication No. 2016/0249908;

[0270] U.S. patent application Ser. No. 14/633,548, entitled POWER ADAPTER FOR A SURGICAL INSTRUMENT, now U.S. Patent Application Publication No. 2016/0249909;

[0271] U.S. patent application Ser. No. 14/633,526, entitled ADAPTABLE SURGICAL INSTRUMENT HANDLE, now U.S. Patent Application Publication No. 2016/0249945;

[0272] U.S. patent application Ser. No. 14/633,541, entitled MODULAR STAPLING ASSEMBLY, now U.S. Patent Application Publication No. 2016/0249927; and

[0273] U.S. patent application Ser. No. 14/633,562, entitled SURGICAL APPARATUS CONFIGURED TO TRACK AN END-OF-LIFE PARAMETER, now U.S. Patent Application Publication No. 2016/0249917.

[0274] Applicant of the present application owns the following patent applications that were filed on Dec. 18, 2014 and which are each herein incorporated by reference in their respective entirety:

[0275] U.S. patent application Ser. No. 14/574,478, entitled SURGICAL INSTRUMENT SYSTEMS COMPRISING AN ARTICULATABLE END EFFECTOR AND MEANS FOR ADJUSTING THE FIRING STROKE OF A FIRING MEMBER, now U.S. Patent Application Publication No. 2016/0174977;

[0276] U.S. patent application Ser. No. 14/574,483, entitled SURGICAL INSTRUMENT ASSEMBLY COMPRISING LOCKABLE SYSTEMS, now U.S. Patent Application Publication No. 2016/0174969;

[0277] U.S. patent application Ser. No. 14/575,139, entitled DRIVE ARRANGEMENTS FOR ARTICULATABLE SURGICAL INSTRUMENTS, now U.S. Patent Application Publication No. 2016/0174978;

[0278] U.S. patent application Ser. No. 14/575,148, entitled LOCKING ARRANGEMENTS FOR DETACHABLE SHAFT ASSEMBLIES WITH ARTICULATABLE SURGICAL END EFFECTORS, now U.S. Patent Application Publication No. 2016/0174976;

[0279] U.S. patent application Ser. No. 14/575,130, entitled SURGICAL INSTRUMENT WITH AN ANVIL THAT IS SELECTIVELY MOVABLE ABOUT A DISCRETE NON-MOVABLE AXIS RELATIVE TO A STAPLE CARTRIDGE, now U.S. Patent Application Publication No. 2016/0174972;

[0280] U.S. patent application Ser. No. 14/575,143, entitled SURGICAL INSTRUMENTS WITH IMPROVED CLOSURE ARRANGEMENTS, now U.S. Patent Application Publication No. 2016/0174983;

[0281] U.S. patent application Ser. No. 14/575,117, entitled SURGICAL INSTRUMENTS WITH ARTICULATABLE END EFFECTORS AND MOVABLE FIRING BEAM SUPPORT ARRANGEMENTS, now U.S. Patent Application Publication No. 2016/0174975;

[0282] U.S. patent application Ser. No. 14/575,154, entitled SURGICAL INSTRUMENTS WITH ARTICULATABLE END EFFECTORS AND IMPROVED FIRING BEAM SUPPORT ARRANGEMENTS, now U.S. Patent Application Publication No. 2016/0174973;

[0283] U.S. patent application Ser. No. 14/574,493, entitled SURGICAL INSTRUMENT ASSEMBLY COMPRISING A FLEXIBLE ARTICULATION SYSTEM, now U.S. Patent Application Publication No. 2016/0174970; and

[0284] U.S. patent application Ser. No. 14/574,500, entitled SURGICAL INSTRUMENT ASSEMBLY COMPRISING A LOCKABLE ARTICULATION SYSTEM, now U.S. Patent Application Publication No. 2016/0174971.

[0285] Applicant of the present application owns the following patent applications that were filed on Mar. 1, 2013 and which are each herein incorporated by reference in their respective entirety:

[0286] U.S. patent application Ser. No. 13/782,295, entitled ARTICULATABLE SURGICAL INSTRUMENTS WITH CONDUCTIVE PATHWAYS FOR SIGNAL COMMUNICATION, now U.S. Patent Application Publication No. 2014/0246471;

[0287] U.S. patent application Ser. No. 13/782,323, entitled ROTARY POWERED ARTICULATION JOINTS FOR SURGICAL INSTRUMENTS, now U.S. Patent Application Publication No. 2014/0246472;

[0288] U.S. patent application Ser. No. 13/782,338, entitled THUMBWHEEL SWITCH ARRANGEMENTS FOR SURGICAL INSTRUMENTS, now U.S. Patent Application Publication No. 2014/0249557;

[0289] U.S. patent application Ser. No. 13/782,499, entitled ELECTROMECHANICAL SURGICAL DEVICE WITH SIGNAL RELAY ARRANGEMENT, now U.S. Pat. No. 9,358,003;

[0290] U.S. patent application Ser. No. 13/782,460, entitled MULTIPLE PROCESSOR MOTOR CONTROL FOR MODULAR SURGICAL INSTRUMENTS, now U.S. Patent Application Publication No. 2014/0246478;

[0291] U.S. patent application Ser. No. 13/782,358, entitled JOYSTICK SWITCH ASSEMBLIES FOR SURGICAL INSTRUMENTS, now U.S. Pat. No. 9,326,767;

[0292] U.S. patent application Ser. No. 13/782,481, entitled SENSOR STRAIGHTENED END EFFECTOR DURING REMOVAL THROUGH TROCAR, now U.S. Pat. No. 9,468,438;

[0293] U.S. patent application Ser. No. 13/782,518, entitled CONTROL METHODS FOR SURGICAL INSTRUMENTS WITH REMOVABLE IMPLEMENT PORTIONS, now U.S. Patent Application Publication No. 2014/0246475;

[0294] U.S. patent application Ser. No. 13/782,375, entitled ROTARY POWERED SURGICAL INSTRUMENTS WITH MULTIPLE DEGREES OF FREEDOM, now U.S. Pat. No. 9,398,911; and

[0295] U.S. patent application Ser. No. 13/782,536, entitled SURGICAL INSTRUMENT SOFT STOP, now U.S. Pat. No. 9,307,986.

[0296] Applicant of the present application also owns the following patent applications that were filed on Mar. 14, 2013 and which are each herein incorporated by reference in their respective entirety:

[0297] U.S. patent application Ser. No. 13/803,097, entitled ARTICULATABLE SURGICAL INSTRUMENT COMPRISING A FIRING DRIVE, now U.S. Patent Application Publication No. 2014/0263542;

[0298] U.S. patent application Ser. No. 13/803,193, entitled CONTROL ARRANGEMENTS FOR A DRIVE MEMBER OF A SURGICAL INSTRUMENT, now U.S. Pat. No. 9,332,987;

[0299] U.S. patent application Ser. No. 13/803,053, entitled INTERCHANGEABLE SHAFT ASSEMBLIES FOR USE WITH A SURGICAL INSTRUMENT, now U.S. Patent Application Publication No. 2014/0263564;

[0300] U.S. patent application Ser. No. 13/803,086, entitled ARTICULATABLE SURGICAL INSTRUMENT COMPRISING AN ARTICULATION LOCK, now U.S. Patent Application Publication No. 2014/0263541;

[0301] U.S. patent application Ser. No. 13/803,210, entitled SENSOR ARRANGEMENTS FOR ABSOLUTE POSITIONING SYSTEM FOR SURGICAL INSTRUMENTS, now U.S. Patent Application Publication No. 2014/0263538;

[0302] U.S. patent application Ser. No. 13/803,148, entitled MULTI-FUNCTION MOTOR FOR A SURGICAL INSTRUMENT, now U.S. Patent Application Publication No. 2014/0263554;

[0303] U.S. patent application Ser. No. 13/803,066, entitled DRIVE SYSTEM LOCKOUT ARRANGEMENTS FOR MODULAR SURGICAL INSTRUMENTS, now U.S. Patent Application Publication No. 2014/0263565;

[0304] U.S. patent application Ser. No. 13/803,117, entitled ARTICULATION CONTROL SYSTEM FOR ARTICULATABLE SURGICAL INSTRUMENTS, now U.S. Pat. No. 9,351,726;

[0305] U.S. patent application Ser. No. 13/803,130, entitled DRIVE TRAIN CONTROL ARRANGEMENTS FOR MODULAR SURGICAL INSTRUMENTS, now U.S. Pat. No. 9,351,727; and

[0306] U.S. patent application Ser. No. 13/803,159, entitled METHOD AND SYSTEM FOR OPERATING A SURGICAL INSTRUMENT, now U.S. Patent Application Publication No. 2014/0277017.

[0307] Applicant of the present application also owns the following patent application that was filed on Mar. 7, 2014 and is herein incorporated by reference in its entirety:

[0308] U.S. patent application Ser. No. 14/200,111, entitled CONTROL SYSTEMS FOR SURGICAL INSTRUMENTS, now U.S. Patent Application Publication No. 2014/0263539.

[0309] Applicant of the present application also owns the following patent applications that were filed on Mar. 26, 2014 and are each herein incorporated by reference in their respective entirety:

[0310] U.S. patent application Ser. No. 14/226,106, entitled POWER MANAGEMENT CONTROL SYSTEMS FOR SURGICAL INSTRUMENTS, now U.S. Patent Application Publication No. 2015/0272582;

[0311] U.S. patent application Ser. No. 14/226,099, entitled STERILIZATION VERIFICATION CIRCUIT, now U.S. Patent Application Publication No. 2015/0272581;

[0312] U.S. patent application Ser. No. 14/226,094, entitled VERIFICATION OF NUMBER OF BATTERY EXCHANGES/PROCEDURE COUNT, now U.S. Patent Application Publication No. 2015/0272580;

[0313] U.S. patent application Ser. No. 14/226,117, entitled POWER MANAGEMENT THROUGH SLEEP OPTIONS OF SEGMENTED CIRCUIT AND WAKE UP CONTROL, now U.S. Patent Application Publication No. 2015/0272574;

[0314] U.S. patent application Ser. No. 14/226,075, entitled MODULAR POWERED SURGICAL INSTRUMENT WITH DETACHABLE SHAFT ASSEMBLIES, now U.S. Patent Application Publication No. 2015/0272579;

[0315] U.S. patent application Ser. No. 14/226,093, entitled FEEDBACK ALGORITHMS FOR MANUAL BAILOUT SYSTEMS FOR SURGICAL INSTRUMENTS, now U.S. Patent Application Publication No. 2015/0272569;

[0316] U.S. patent application Ser. No. 14/226,116, entitled SURGICAL INSTRUMENT UTILIZING SENSOR ADAPTATION, now U.S. Patent Application Publication No. 2015/0272571;

[0317] U.S. patent application Ser. No. 14/226,071, entitled SURGICAL INSTRUMENT CONTROL CIRCUIT HAVING A SAFETY PROCESSOR, now U.S. Patent Application Publication No. 2015/0272578;

[0318] U.S. patent application Ser. No. 14/226,097, entitled SURGICAL INSTRUMENT COMPRISING

INTERACTIVE SYSTEMS, now U.S. Patent Application Publication No. 2015/0272570;

[0319] U.S. patent application Ser. No. 14/226,126, entitled INTERFACE SYSTEMS FOR USE WITH SURGICAL INSTRUMENTS, now U.S. Patent Application Publication No. 2015/0272572;

[0320] U.S. patent application Ser. No. 14/226,133, entitled MODULAR SURGICAL INSTRUMENT SYSTEM, now U.S. Patent Application Publication No. 2015/0272557;

[0321] U.S. patent application Ser. No. 14/226,081, entitled SYSTEMS AND METHODS FOR CONTROLLING A SEGMENTED CIRCUIT, now U.S. Patent Application Publication No. 2015/0277471;

[0322] U.S. patent application Ser. No. 14/226,076, entitled POWER MANAGEMENT THROUGH SEGMENTED CIRCUIT AND VARIABLE VOLTAGE PROTECTION, now U.S. Patent Application Publication No. 2015/0280424;

[0323] U.S. patent application Ser. No. 14/226,111, entitled SURGICAL STAPLING INSTRUMENT SYSTEM, now U.S. Patent Application Publication No. 2015/0272583; and

[0324] U.S. patent application Ser. No. 14/226,125, entitled SURGICAL INSTRUMENT COMPRISING A ROTATABLE SHAFT, now U.S. Patent Application Publication No. 2015/0280384.

[0325] Applicant of the present application also owns the following patent applications that were filed on Sep. 5, 2014 and which are each herein incorporated by reference in their respective entirety:

[0326] U.S. patent application Ser. No. 14/479,103, entitled CIRCUITRY AND SENSORS FOR POWERED MEDICAL DEVICE, now U.S. Patent Application Publication No. 2016/0066912;

[0327] U.S. patent application Ser. No. 14/479,119, entitled ADJUNCT WITH INTEGRATED SENSORS TO QUANTIFY TISSUE COMPRESSION, now U.S. Patent Application Publication No. 2016/0066914;

[0328] U.S. patent application Ser. No. 14/478,908, entitled MONITORING DEVICE DEGRADATION BASED ON COMPONENT EVALUATION, now U.S. Patent Application Publication No. 2016/0066910;

[0329] U.S. patent application Ser. No. 14/478,895, entitled MULTIPLE SENSORS WITH ONE SENSOR AFFECTING A SECOND SENSOR'S OUTPUT OR INTERPRETATION, now U.S. Patent Application Publication No. 2016/0066909;

[0330] U.S. patent application Ser. No. 14/479,110, entitled POLARITY OF HALL MAGNET TO DETECT MISLOADED CARTRIDGE, now U.S. Patent Application Publication No. 2016/0066915;

[0331] U.S. patent application Ser. No. 14/479,098, entitled SMART CARTRIDGE WAKE UP OPERATION AND DATA RETENTION, now U.S. Patent Application Publication No. 2016/0066911;

[0332] U.S. patent application Ser. No. 14/479,115, entitled MULTIPLE MOTOR CONTROL FOR POWERED MEDICAL DEVICE, now U.S. Patent Application Publication No. 2016/0066916; and

[0333] U.S. patent application Ser. No. 14/479,108, entitled LOCAL DISPLAY OF TISSUE PARAMETER STABILIZATION, now U.S. Patent Application Publication No. 2016/0066913.

[0334] Applicant of the present application also owns the following patent applications that were filed on Apr. 9, 2014 and which are each herein incorporated by reference in their respective entirety:

[0335] U.S. patent application Ser. No. 14/248,590, entitled MOTOR DRIVEN SURGICAL INSTRUMENTS WITH LOCKABLE DUAL DRIVE SHAFTS, now U.S. Patent Application Publication No. 2014/0305987;

[0336] U.S. patent application Ser. No. 14/248,581, entitled SURGICAL INSTRUMENT COMPRISING A CLOSING DRIVE AND A FIRING DRIVE OPERATED FROM THE SAME ROTATABLE OUTPUT, now U.S. Patent Application Publication No. 2014/0305989;

[0337] U.S. patent application Ser. No. 14/248,595, entitled SURGICAL INSTRUMENT SHAFT INCLUDING SWITCHES FOR CONTROLLING THE OPERATION OF THE SURGICAL INSTRUMENT, now U.S. Patent Application Publication No. 2014/0305988;

[0338] U.S. patent application Ser. No. 14/248,588, entitled POWERED LINEAR SURGICAL STAPLER, now U.S. Patent Application Publication No. 2014/0309666;

[0339] U.S. patent application Ser. No. 14/248,591, entitled TRANSMISSION ARRANGEMENT FOR A SURGICAL INSTRUMENT, now U.S. Patent Application Publication No. 2014/0305991;

[0340] U.S. patent application Ser. No. 14/248,584, entitled MODULAR MOTOR DRIVEN SURGICAL INSTRUMENTS WITH ALIGNMENT FEATURES FOR ALIGNING ROTARY DRIVE SHAFTS WITH SURGICAL END EFFECTOR SHAFTS, now U.S. Patent Application Publication No. 2014/0305994;

[0341] U.S. patent application Ser. No. 14/248,587, entitled POWERED SURGICAL STAPLER, now U.S. Patent Application Publication No. 2014/0309665;

[0342] U.S. patent application Ser. No. 14/248,586, entitled DRIVE SYSTEM DECOUPLING ARRANGEMENT FOR A SURGICAL INSTRUMENT, now U.S. Patent Application Publication No. 2014/0305990; and

[0343] U.S. patent application Ser. No. 14/248,607, entitled MODULAR MOTOR DRIVEN SURGICAL INSTRUMENTS WITH STATUS INDICATION ARRANGEMENTS, now U.S. Patent Application Publication No. 2014/0305992.

[0344] Applicant of the present application also owns the following patent applications that were filed on Apr. 16, 2013 and which are each herein incorporated by reference in their respective entirety:

[0345] U.S. Provisional Patent Application Ser. No. 61/812,365, entitled SURGICAL INSTRUMENT WITH MULTIPLE FUNCTIONS PERFORMED BY A SINGLE MOTOR;

[0346] U.S. Provisional Patent Application Ser. No. 61/812,376, entitled LINEAR CUTTER WITH POWER;

[0347] U.S. Provisional Patent Application Ser. No. 61/812,382, entitled LINEAR CUTTER WITH MOTOR AND PISTOL GRIP;

[0348] U.S. Provisional Patent Application Ser. No. 61/812,385, entitled SURGICAL INSTRUMENT

HANDLE WITH MULTIPLE ACTUATION MOTORS AND MOTOR CONTROL; and

[0349] U.S. Provisional Patent Application Ser. No. 61/812,372, entitled SURGICAL INSTRUMENT WITH MULTIPLE FUNCTIONS PERFORMED BY A SINGLE MOTOR.

[0350] Numerous specific details are set forth to provide a thorough understanding of the overall structure, function, manufacture, and use of the embodiments as described in the specification and illustrated in the accompanying drawings. Well-known operations, components, and elements have not been described in detail so as not to obscure the embodiments described in the specification. The reader will understand that the embodiments described and illustrated herein are non-limiting examples, and thus it can be appreciated that the specific structural and functional details disclosed herein may be representative and illustrative. Variations and changes thereto may be made without departing from the scope of the claims.

[0351] The terms "comprise" (and any form of comprise, such as "comprises" and "comprising"), "have" (and any form of have, such as "has" and "having"), "include" (and any form of include, such as "includes" and "including") and "contain" (and any form of contain, such as "contains" and "containing") are open-ended linking verbs. As a result, a surgical system, device, or apparatus that "comprises," "has," "includes" or "contains" one or more elements possesses those one or more elements, but is not limited to possessing only those one or more elements. Likewise, an element of a system, device, or apparatus that "comprises," "has," "includes" or "contains" one or more features possesses those one or more features, but is not limited to possessing only those one or more features.

[0352] The terms "proximal" and "distal" are used herein with reference to a clinician manipulating the handle portion of the surgical instrument. The term "proximal" refers to the portion closest to the clinician and the term "distal" refers to the portion located away from the clinician. It will be further appreciated that, for convenience and clarity, spatial terms such as "vertical", "horizontal", "up", and "down" may be used herein with respect to the drawings. However, surgical instruments are used in many orientations and positions, and these terms are not intended to be limiting and/or absolute.

[0353] Various exemplary devices and methods are provided for performing laparoscopic and minimally invasive surgical procedures. However, the reader will readily appreciate that the various methods and devices disclosed herein can be used in numerous surgical procedures and applications including, for example, in connection with open surgical procedures. As the present Detailed Description proceeds, the reader will further appreciate that the various instruments disclosed herein can be inserted into a body in any way, such as through a natural orifice, through an incision or puncture hole formed in tissue, etc. The working portions or end effector portions of the instruments can be inserted directly into a patient's body or can be inserted through an access device that has a working channel through which the end effector and elongate shaft of a surgical instrument can be advanced.

[0354] A surgical stapling system can comprise a shaft and an end effector extending from the shaft. The end effector comprises a first jaw and a second jaw. The first jaw comprises a staple cartridge. The staple cartridge is insertable into and removable from the first jaw; however, other embodiments are envisioned in which a staple cartridge is not removable from, or at least readily replaceable from, the first jaw. The second jaw comprises an anvil configured to deform staples ejected from the staple cartridge. The second jaw is pivotable relative to the first jaw about a closure axis; however, other embodiments are envisioned in which the first jaw is pivotable relative to the second jaw. The surgical stapling system further comprises an articulation joint configured to permit the end effector to be rotated, or articulated, relative to the shaft. The end effector is rotatable about an articulation axis extending through the articulation joint. Other embodiments are envisioned which do not include an articulation joint.

[0355] The staple cartridge comprises a cartridge body. The cartridge body includes a proximal end, a distal end, and a deck extending between the proximal end and the distal end. In use, the staple cartridge is positioned on a first side of the tissue to be stapled and the anvil is positioned on a second side of the tissue. The anvil is moved toward the staple cartridge to compress and clamp the tissue against the deck. Thereafter, staples removably stored in the cartridge body can be deployed into the tissue. The cartridge body includes staple cavities defined therein wherein staples are removably stored in the staple cavities. The staple cavities are arranged in six longitudinal rows. Three rows of staple cavities are positioned on a first side of a longitudinal slot and three rows of staple cavities are positioned on a second side of the longitudinal slot. Other arrangements of staple cavities and staples may be possible.

[0356] The staples are supported by staple drivers in the cartridge body. The drivers are movable between a first, or unfired position, and a second, or fired, position to eject the staples from the staple cavities. The drivers are retained in the cartridge body by a retainer which extends around the bottom of the cartridge body and includes resilient members configured to grip the cartridge body and hold the retainer to the cartridge body. The drivers are movable between their unfired positions and their fired positions by a sled. The sled is movable between a proximal position adjacent the proximal end and a distal position adjacent the distal end. The sled comprises a plurality of ramped surfaces configured to slide under the drivers and lift the drivers, and the staples supported thereon, toward the anvil.

[0357] Further to the above, the sled is moved distally by a firing member. The firing member is configured to contact the sled and push the sled toward the distal end. The longitudinal slot defined in the cartridge body is configured to receive the firing member. The anvil also includes a slot configured to receive the firing member. The firing member further comprises a first cam which engages the first jaw and a second cam which engages the second jaw. As the firing member is advanced distally, the first cam and the second cam can control the distance, or tissue gap, between the deck of the staple cartridge and the anvil. The firing member also comprises a knife configured to incise the tissue captured intermediate the staple cartridge and the anvil. It is desirable for the knife to be positioned at least partially proximal to the ramped surfaces such that the staples are ejected ahead of the knife.

[0358] FIG. **1** depicts a motor-driven surgical system **10** that may be used to perform a variety of different surgical procedures. As can be seen in that Figure, one example of the surgical system **10** includes four interchangeable surgical tool assemblies **100**, **200**, **300** and **1000** that are each

adapted for interchangeable use with a handle assembly **500**. Each interchangeable surgical tool assembly **100**, **200**, **300** and **1000** may be designed for use in connection with the performance of one or more specific surgical procedures. In another surgical system embodiment, the interchangeable surgical tool assemblies may be effectively employed with a tool drive assembly of a robotically controlled or automated surgical system. For example, the surgical tool assemblies disclosed herein may be employed with various robotic systems, instruments, components and methods such as, but not limited to, those disclosed in U.S. Pat. No. 9,072,535, entitled SURGICAL STAPLING INSTRUMENTS WITH ROTATABLE STAPLE DEPLOYMENT ARRANGEMENTS, which is hereby incorporated by reference herein in its entirety.

[0359] FIG. **2** illustrates one form of an interchangeable surgical tool assembly **100** that is operably coupled to the handle assembly **500**. FIG. **3** illustrates attachment of the interchangeable surgical tool assembly **100** to the handle assembly **500**. The attachment arrangement and process depicted in FIG. **3** may also be employed in connection with attachment of any of the interchangeable surgical tool assemblies **100**, **200**, **300** and **1000** to a tool drive portion or tool drive housing of a robotic system. The handle assembly **500** may comprise a handle housing **502** that includes a pistol grip portion **504** that can be gripped and manipulated by the clinician. As will be briefly discussed below, the handle assembly **500** operably supports a plurality of drive systems that are configured to generate and apply various control motions to corresponding portions of the interchangeable surgical tool assembly **100**, **200**, **300** and/or **1000** that is operably attached thereto.

[0360] Referring now to FIG. **3**, the handle assembly **500** may further include a frame **506** that operably supports the plurality of drive systems. For example, the frame **506** can operably support a "first" or closure drive system, generally designated as **510**, which may be employed to apply closing and opening motions to the interchangeable surgical tool assembly **100**, **200**, **300** and **1000** that is operably attached or coupled to the handle assembly **500**. In at least one form, the closure drive system **510** may include an actuator in the form of a closure trigger **512** that is pivotally supported by the frame **506**. Such arrangement enables the closure trigger **512** to be manipulated by a clinician such that when the clinician grips the pistol grip portion **504** of the handle assembly **500**, the closure trigger **512** may be easily pivoted from a starting or "unactuated" position to an "actuated" position and more particularly to a fully compressed or fully actuated position. In various forms, the closure drive system **510** further includes a closure linkage assembly **514** that is pivotally coupled to the closure trigger **512** or otherwise operably interfaces therewith. As will be discussed in further detail below, in the illustrated example, the closure linkage assembly **514** includes a transverse attachment pin **516** that facilitates attachment to a corresponding drive system on the surgical tool assembly. In use, to actuate the closure drive system, the clinician depresses the closure trigger **512** towards the pistol grip portion **504**. As described in further detail in U.S. patent application Ser. No. 14/226,142, entitled SURGICAL INSTRUMENT COMPRISING A SENSOR SYSTEM, now U.S. Patent Application Publication No. 2015/0272575, which is hereby incorporated by reference in its entirety herein, when the clinician fully depresses the closure trigger **512** to attain the full closure stroke, the closure drive system is configured to lock the closure trigger **512** into the fully depressed or fully actuated position. When the clinician desires to unlock the closure trigger **512** to permit it to be biased to the unactuated position, the clinician simply activates a closure release button assembly **518** which enables the closure trigger to return to unactuated position. The closure release button **518** may also be configured to interact with various sensors that communicate with a microcontroller **520** in the handle assembly **500** for tracking the position of the closure trigger **512**. Further details concerning the configuration and operation of the closure release button assembly **518** may be found in U.S. Patent Application Publication No. 2015/0272575.

[0361] In at least one form, the handle assembly **500** and the frame **506** may operably support another drive system referred to herein as a firing drive system **530** that is configured to apply firing motions to corresponding portions of the interchangeable surgical tool assembly that is attached thereto. As was described in detail in U.S. Patent Application Publication No. 2015/0272575, the firing drive system **530** may employ an electric motor (not shown in FIGS. **1-3**) that is located in the pistol grip portion **504** of the handle assembly **500**. In various forms, the motor may be a DC brushed driving motor having a maximum rotation of, approximately, 25,000 RPM, for example. In other arrangements, the motor may include a brushless motor, a cordless motor, a synchronous motor, a stepper motor, or any other suitable electric motor. The motor may be powered by a power source **522** that in one form may comprise a removable power pack. The power pack may support a plurality of Lithium Ion ("LI") or other suitable batteries therein. A number of batteries may be connected in series may be used as the power source **522** for the surgical system **10**. In addition, the power source **522** may be replaceable and/or rechargeable.

[0362] The electric motor is configured to axially drive a longitudinally movable drive member **540** in a distal and proximal directions depending upon the polarity of the motor. For example, when the motor is driven in one rotary direction, the longitudinally movable drive member **540** the will be axially driven in the distal direction "DD". When the motor is driven in the opposite rotary direction, the longitudinally movable drive member **540** will be axially driven in a proximal direction "PD". The handle assembly **500** can include a switch **513** which can be configured to reverse the polarity applied to the electric motor by the power source **522** or otherwise control the motor. The handle assembly **500** can also include a sensor or sensors (not shown) that is configured to detect the position of the drive member **540** and/or the direction in which the drive member **540** is being moved. Actuation of the motor can be controlled by a firing trigger **532** (FIG. **1**) that is pivotally supported on the handle assembly **500**. The firing trigger **532** may be pivoted between an unactuated position and an actuated position. The firing trigger **532** may be biased into the unactuated position by a spring or other biasing arrangement such that when the clinician releases the firing trigger **532**, it may be pivoted or otherwise returned to the unactuated position by the spring or biasing arrangement. In at least one form, the firing trigger **532** can be positioned "outboard" of the closure trigger **512** as was discussed above. As discussed in U.S. Patent Application Publication No. 2015/0272575, the handle assembly **500** may be equipped with a firing trigger

safety button (not shown) to prevent inadvertent actuation of the firing trigger **532**. When the closure trigger **512** is in the unactuated position, the safety button is contained in the handle assembly **500** where the clinician cannot readily access it and move it between a safety position preventing actuation of the firing trigger **532** and a firing position wherein the firing trigger **532** may be fired. As the clinician depresses the closure trigger **512**, the safety button and the firing trigger **532** pivot down wherein they can then be manipulated by the clinician.

[0363] In at least one form, the longitudinally movable drive member **540** may have a rack of teeth (not shown) formed thereon for meshing engagement with a corresponding drive gear arrangement (not shown) that interfaces with the motor. Further details regarding those features may be found in U.S. Patent Application Publication No. 2015/0272575. At least one form also includes a manually-actuatable "bailout" assembly that is configured to enable the clinician to manually retract the longitudinally movable drive member **540** should the motor become disabled. The bailout assembly may include a lever or bailout handle assembly that is stored within the handle assembly **500** under a releasable door **550**. The lever is configured to be manually pivoted into ratcheting engagement with the teeth in the drive member **540**. Thus, the clinician can manually retract the drive member **540** by using the bailout handle assembly to ratchet the drive member **5400** in the proximal direction "PD". U.S. patent application Ser. No. 12/249,117, entitled POWERED SURGICAL CUTTING AND STAPLING APPARATUS WITH MANUALLY RETRACTABLE FIRING SYSTEM, now U.S. Pat. No. 8,608,045, the entire disclosure of which is hereby incorporated by reference herein discloses bailout arrangements and other components, arrangements and systems that may also be employed with the various surgical tool assemblies disclosed herein.

[0364] Turning now to FIG. **2**, the interchangeable surgical tool assembly **100** includes a surgical end effector **110** that comprises a first jaw and a second jaw. In one arrangement, the first jaw comprises an elongate channel **112** that is configured to operably support a surgical staple cartridge **116** therein. The second jaw comprises an anvil **114** that is pivotally supported relative to the elongate channel **112**. The interchangeable surgical tool assembly **100** also includes a lockable articulation joint **120** which can be configured to releasably hold the end effector **110** in a desired position relative to a shaft axis SA. Details regarding various constructions and operation of the end effector **110**, the articulation joint **120** and the articulation lock are set forth in U.S. patent application Ser. No. 13/803,086, entitled ARTICULATABLE SURGICAL INSTRUMENT COMPRISING AN ARTICULATION LOCK, now U.S. Patent Application Publication No. 2014/0263541, which is hereby incorporated by reference herein in its entirety. As can be further seen in FIGS. **2** and **3**, the interchangeable surgical tool assembly **100** can include a proximal housing or nozzle **130** and a closure tube assembly **140** which can be utilized to close and/or open the anvil **114** of the end effector **110**. As discussed in U.S. Patent Application Publication No. 2015/0272575, the closure tube assembly **140** is movably supported on a spine **145** which supports articulation driver arrangement **147** for applying articulation motions to the surgical end effector **110**. The spine **145** is configured to, one, slidably support a firing bar **170** therein and, two, slidably support the closure tube assembly **140** which extends around the spine **145**. In various circumstances, the spine **145** includes a proximal end that is rotatably supported in a chassis **150**. See FIG. **3**. In one arrangement, for example, the proximal end of the spine **145** is attached to a spine bearing (not shown) that is configured to be supported within the chassis **150**. Such an arrangement facilitates rotatable attachment of the spine **145** to the chassis **150** such that the spine **145** may be selectively rotated about a shaft axis SA relative to the chassis **150**.

[0365] Still referring to FIG. **3**, the interchangeable surgical tool assembly **100** includes a closure shuttle **160** that is slidably supported within the chassis **150** such that it may be axially moved relative thereto. As can be seen in FIG. **3**, the closure shuttle **160** includes a pair of proximally-protruding hooks **162** that are configured for attachment to the attachment pin **516** that is attached to the closure linkage assembly **514** in the handle assembly **500**. A proximal closure tube segment **146** of the closure tube assembly **140** is coupled to the closure shuttle **160** for relative rotation thereto. Thus, when the hooks **162** are hooked over the pin **516**, actuation of the closure trigger **512** will result in the axial movement of the closure shuttle **160** and ultimately, the closure tube assembly **140** on the spine **145**. A closure spring (not shown) may also be journaled on the closure tube assembly **140** and serves to bias the closure tube assembly **140** in the proximal direction "PD" which can serve to pivot the closure trigger **512** into the unactuated position when the shaft assembly **100** is operably coupled to the handle assembly **500**. In use, the closure tube assembly **140** is translated distally (direction DD) to close the anvil **114**, for example, in response to the actuation of the closure trigger **512**. The closure tube assembly **140** includes a distal closure tube segment **142** that is pivotally pinned to a distal end of a proximal closure tube segment **146**. The distal closure tube segment **142** is configured to axially move with the proximal closure tube segment **146** relative to the surgical end effector **110**. When the distal end of the distal closure tube segment **142** strikes a proximal surface or ledge **115** on the anvil **114**, the anvil **114** is pivoted closed. Further details concerning the closure of anvil **114** may be found in the aforementioned U.S. Patent Application Publication No. 2014/0263541 and will be discussed in further detail below. As was also described in detail in U.S. Patent Application Publication No. 2014/0263541, the anvil **114** is opened by proximally translating the distal closure tube segment **142**. The distal closure tube segment **142** has a horseshoe aperture **143** therein that defines a downwardly extending return tab (not shown) that cooperates with an anvil tab **117** formed on the proximal end of the anvil **114** to pivot the anvil **114** back to an open position. In the fully open position, the closure tube assembly **140** is in its proximal-most or unactuated position.

[0366] As was also indicated above, the interchangeable surgical tool assembly **100** further includes a firing bar **170** that is supported for axial travel within the shaft spine **145**. The firing bar **170** includes an intermediate firing shaft portion that is configured for attachment to a distal cutting portion or knife bar that is configured for axial travel through the surgical end effector **110**. In at least one arrangement, the interchangeable surgical tool assembly **100** includes a clutch assembly (not shown) which can be configured to selectively and releasably couple the articulation driver to the firing bar **170**. Further details regarding the clutch assembly features and operation may be found in U.S. Patent Application

Publication No. 2014/0263541. As discussed in U.S. Patent Application Publication No. 2014/0263541, when the clutch assembly is in its engaged position, distal movement of the firing bar **170** can move the articulation driver arrangement **147** distally and, correspondingly, proximal movement of the firing bar **170** can move the articulation driver arrangement **147** proximally. When the clutch assembly is in its disengaged position, movement of the firing bar **170** is not transmitted to the articulation driver arrangement **147** and, as a result, the firing bar **170** can move independently of the articulation driver arrangement **147**. The interchangeable surgical tool assembly **100** may also include a slip ring assembly (not shown) which can be configured to conduct electrical power to and/or from the end effector **110** and/or communicate signals to and/or from the end effector **110**. Further details regarding the slip ring assembly may be found in U.S. Patent Application Publication No. 2014/0263541. U.S. patent application Ser. No. 13/800,067, entitled STAPLE CARTRIDGE TISSUE THICKNESS SENSOR SYSTEM, now U.S. Patent Application Publication No. 2014/0263552 is incorporated by reference in its entirety. U.S. Pat. No. 9,345,481, entitled STAPLE CARTRIDGE TISSUE THICKNESS SENSOR SYSTEM, is also hereby incorporated by reference in its entirety.

[0367] Still referring to FIG. **3**, the chassis **150** has at least one, and preferably two, tapered attachment portions **152** formed thereon that are adapted to be received within corresponding dovetail slots **507** formed within a distal end of the frame **506**. Each dovetail slot **507** may be tapered or, stated another way, be somewhat V-shaped to seatingly receive the tapered attachment portions **152** therein. As can be further seen in FIG. **3**, a shaft attachment lug **172** is formed on the proximal end of the firing shaft **170**. When the interchangeable surgical tool assembly **100** is coupled to the handle assembly **500**, the shaft attachment lug **172** is received in a firing shaft attachment cradle **542** formed in the distal end of the longitudinally movable drive member **540**. The interchangeable surgical tool assembly **100** also employs a latch system **180** for releasably latching the shaft assembly **100** to the frame **506** of the handle assembly **500**. In at least one form, for example, the latch system **180** includes a lock member or lock yoke **182** that is movably coupled to the chassis **150**. The lock yoke **182** includes two proximally protruding lock lugs **184** that are configured for releasable engagement with corresponding lock detents or grooves **509** in the distal attachment flange of the frame **506**. In various forms, the lock yoke **182** is biased in the proximal direction by spring or biasing member. Actuation of the lock yoke **182** may be accomplished by a latch button **186** that is slidably mounted on a latch actuator assembly that is mounted to the chassis **150**. The latch button **186** may be biased in a proximal direction relative to the lock yoke **182**. As will be discussed in further detail below, the lock yoke **182** may be moved to an unlocked position by biasing the latch button **186** the in distal direction DD which also causes the lock yoke **182** to pivot out of retaining engagement with the distal attachment flange of the frame **506**. When the lock yoke **182** is in "retaining engagement" with the distal attachment flange of the frame **506**, the lock lugs **184** are retainingly seated within the corresponding lock detents or grooves **509** in the distal end of the frame **506**. Further details concerning the latching system may be found in U.S. Patent Application Publication No. 2014/0263541.

[0368] Attachment of the interchangeable surgical tool assembly **100** to the handle assembly **500** will now be described with reference to FIG. **3**. To commence the coupling process, the clinician may position the chassis **150** of the interchangeable surgical tool assembly **100** above or adjacent to the distal end of the frame **506** such that the tapered attachment portions **152** formed on the chassis **150** are aligned with the dovetail slots **507** in the frame **506**. The clinician may then move the surgical tool assembly **100** along an installation axis IA that is perpendicular to the shaft axis SA to seat the tapered attachment portions **152** in "operable engagement" with the corresponding dovetail receiving slots **507** in the distal end of the frame **506**. In doing so, the shaft attachment lug **172** on the firing shaft **170** will also be seated in the cradle **542** in the longitudinally movable drive member **540** and the portions of pin **516** on the closure link **514** will be seated in the corresponding hooks **162** in the closure shuttle **160**. As used herein, the term "operable engagement" in the context of two components means that the two components are sufficiently engaged with each other so that upon application of an actuation motion thereto, the components may carry out their intended action, function and/or procedure.

[0369] Returning now to FIG. **1**, the surgical system **10** illustrated in that Figure includes four interchangeable surgical tool assemblies **100**, **200**, **300** and **1000** that may each be effectively employed with the same handle assembly **500** to perform different surgical procedures. The construction of an exemplary form of interchangeable surgical tool assembly **100** was briefly discussed above and is discussed in further detail in U.S. Patent Application Publication No. 2014/0263541. Various details regarding interchangeable surgical tool assemblies **200** and **300** may be found in the various U.S. patent applications that were filed on even date herewith and which have been incorporated by reference herein. Various details regarding interchangeable surgical tool assembly **1000** will be discussed in further detail below.

[0370] As illustrated in FIG. **1**, each of the surgical tool assemblies **100**, **200**, **300** and **1000** includes a pair of jaws wherein at least one of the jaws is movable between open positions wherein tissue may be captured or manipulated between the two jaws and closed positions wherein the tissue is firmly retained therebetween. The movable jaw or jaws are moved between open and closed positions upon application of closure and opening motions applied thereto from the handle assembly or the robotic or automated surgical system to which the surgical tool assembly is operably coupled. In addition, each of the illustrated interchangeable surgical tool assemblies includes a firing member that is configured to cut tissue and fire staples from a staple cartridge that is supported in one of the jaws in response to firing motions applied thereto by the handle assembly or robotic system. Each surgical tool assembly may be uniquely designed to perform a specific procedure, for example, to cut and fasten a particular type of and thickness of tissue within a certain area in the body. The closing, firing and articulation control systems in the handle assembly **500** or robotic system may be configured to generate axial control motions and/or rotary control motions depending upon the type of closing, firing and articulation system configurations that are employed in the surgical tool assembly. In one arrangement, when a closure control system in the handle assembly or robotic system is fully actuated, one of the closure system control components

which may, for example, comprise a closure tube assembly as described above, moves axially from an unactuated position to its fully actuated position. The axial distance that the closure tube assembly moves between its unactuated position to its fully actuated position may be referred to herein as its "closure stroke length". Similarly, when a firing system in the handle assembly or robotic system is fully actuated, one of the firing system control components which may, for example, comprise the longitudinally movable drive member as described above moves axially from its unactuated position to its fully actuated or fired position. The axial distance that the longitudinally movable drive member moves between its unactuated position and its fully fired position may be referred to herein as its "firing stroke length". For those surgical tool assemblies that employ articulatable end effector arrangements, the handle assembly or robotic system may employ articulation control components that move axially through an "articulation drive stroke length". In many circumstances, the closure stroke length, the firing stroke length and the articulation drive stroke length are fixed for a particular handle assembly or robotic system. Thus, each of the surgical tool assemblies must be able to accommodate control movements of the closure, firing and/or articulation components through each of their entire stroke lengths without placing undue stress on the surgical tool components which might lead to damage or catastrophic failure of surgical tool assembly.

[0371] Turning now to FIGS. **4-10**, the interchangeable surgical tool assembly **1000** includes a surgical end effector **1100** that comprises an elongate channel **1102** that is configured to operably support a staple cartridge **1110** therein. The end effector **1100** may further include an anvil **1130** that is pivotally supported relative to the elongate channel **1102**. The interchangeable surgical tool assembly **1000** may further include an articulation joint **1200** and an articulation lock **1210** (FIGS. **5** and **8-10**) which can be configured to releasably hold the end effector **1100** in a desired articulated position relative to a shaft axis SA. Details regarding the construction and operation of the articulation lock **1210** may be found in U.S. patent application Ser. No. 13/803,086, entitled ARTICULATABLE SURGICAL INSTRUMENT COMPRISING AN ARTICULATION LOCK, now U.S. Patent Application Publication No. 2014/0263541, the entire disclosure of which is hereby incorporated by reference herein. Additional details concerning the articulation lock may also be found in U.S. patent application Ser. No. 15/019,196, filed Feb. 9, 2016, entitled SURGICAL INSTRUMENT ARTICULATION MECHANISM WITH SLOTTED SECONDARY CONSTRAINT, the entire disclosure of which is hereby incorporated by reference herein. As can be seen in FIG. **7**, the interchangeable surgical tool assembly **1000** can further include a proximal housing or nozzle **1300** comprised of nozzle portions **1302**, **1304** as well as an actuator wheel portion **1306** that is configured to be coupled to the assembled nozzle portions **1302**, **1304** by snaps, lugs, screws etc. The interchangeable surgical tool assembly **1000** can further include a closure tube assembly **1400** which can be utilized to close and/or open the anvil **1130** of the end effector **1100** as will be discussed in further detail below. Primarily referring now to FIGS. **8** and **9**, the interchangeable surgical tool assembly **1000** can include a spine assembly **1500** which can be configured to support the articulation lock **1210**. In the illustrated arrangement, the spine assembly **1500** comprises an "elastic" spine or frame member **1510** which will be described in further detail below. A distal end portion **1522** of the elastic spine member **1510** is attached to a distal frame segment **1560** that operably supports the articulation lock **1210** therein. As can be seen in FIGS. **7** and **8**, the spine assembly **1500** is configured to, one, slidably support a firing member assembly **1600** therein and, two, slidably support the closure tube assembly **1400** which extends around the spine assembly **1500**. The spine assembly **1500** can also be configured to slidably support a proximal articulation driver **1700**.

[0372] As can be seen in FIG. **10**, the distal frame segment **1560** is pivotally coupled to the elongate channel **1102** by an end effector mounting assembly **1230**. In one arrangement, for example, the distal end **1562** of the distal frame segment **1560** has a pivot pin **1564** formed thereon. The pivot pin **1564** is adapted to be pivotally received within a pivot hole **1234** formed in pivot base portion **1232** of the end effector mounting assembly **1230**. The end effector mounting assembly **1230** is attached to the proximal end **1103** of the elongate channel **1102** by a spring pin **1105** or other suitable member. The pivot pin **1564** defines an articulation axis B-B that is transverse to the shaft axis SA. See FIG. **4**. Such arrangement facilitates pivotal travel (i.e., articulation) of the end effector **1100** about the articulation axis B-B relative to the spine assembly **1500**.

[0373] Still referring to FIG. **10**, in the illustrated embodiment, the articulation driver **1700** has a distal end **1702** that is configured to operably engage the articulation lock **1210**. The articulation lock **1210** includes an articulation frame **1212** that is adapted to operably engage a drive pin **1238** on the pivot base portion **1232** of the end effector mounting assembly **1230**. In addition, a cross-link **1237** may be linked to the drive pin **1238** and articulation frame **1212** to assist articulation of the end effector **1100**. As indicated above, further details regarding the operation of the articulation lock **1210** and the articulation frame **1212** may be found in U.S. patent application Ser. No. 13/803,086, now U.S. Patent Application Publication No. 2014/0263541. Further details regarding the end effector mounting assembly and crosslink may be found in U.S. patent application Ser. No. 15/019,245, filed Feb. 9, 2016, entitled SURGICAL INSTRUMENTS WITH CLOSURE STROKE REDUCTION ARRANGEMENTS, the entire disclosure of which is hereby incorporated by reference herein. In various circumstances, the elastic spine member **1510** includes a proximal end **1514** which is rotatably supported in a chassis **1800**. In one arrangement, for example, the proximal end **1514** of the elastic spine member **1510** has a thread **1516** formed thereon for threaded attachment to a spine bearing (not shown) that is configured to be supported within the chassis **1800**. Such an arrangement facilitates rotatable attachment of the elastic spine member **1510** to the chassis **1800** such that the spine assembly **1500** may be selectively rotated about a shaft axis SA relative to the chassis **1800**.

[0374] Referring primarily to FIG. **7**, the interchangeable surgical tool assembly **1000** includes a closure shuttle **1420** that is slidably supported within the chassis **1800** such that it may be axially moved relative thereto. In one form, the closure shuttle **1420** includes a pair of proximally-protruding hooks **1421** that are configured for attachment to the attachment pin **516** that is attached to the closure linkage assembly **514** of the handle assembly **500** as was discussed above. A proximal end **1412** of a proximal closure tube segment **1410** is coupled to the closure shuttle **1420** for

relative rotation thereto. For example, a U-shaped connector **1424** is inserted into an annular slot **1414** in the proximal end **1412** of the proximal closure tube segment **1410** and is retained within vertical slots **1422** in the closure shuttle **1420**. See FIG. **7**. Such arrangement serves to attach the proximal closure tube segment **1410** to the closure shuttle **1420** for axial travel therewith while enabling the closure tube assembly **1400** to rotate relative to the closure shuttle **1420** about the shaft axis SA. A closure spring (not shown) is journaled on the proximal end **1412** of the proximal closure tube segment **1410** and serves to bias the closure tube assembly **1400** in the proximal direction PD which can serve to pivot the closure trigger **512** on the handle assembly **500** (FIG. **3**) into the unactuated position when the interchangeable surgical tool assembly **1000** is operably coupled to the handle assembly **500**.

[0375] As indicated above, the illustrated interchangeable surgical tool assembly **1000** includes an articulation joint **1200**. Other interchangeable surgical tool assemblies, however, may not be capable of articulation. As can be seen in FIG. **10**, upper and lower tangs **1415**, **1416** protrude distally from a distal end of the proximal closure tube segment **1410** to be movably coupled to an end effector closure sleeve or distal closure tube segment **1430** of the closure tube assembly **1400**. As can be seen in FIG. **10**, the distal closure tube segment **1430** includes upper and lower tangs **1434**, **1436** that protrude proximally from a proximal end thereof. An upper double pivot link **1220** includes proximal and distal pins that engage corresponding holes in the upper tangs **1415**, **1434** of the proximal closure tube segment **1410** and distal closure tube segment **1430**, respectively. Similarly, a lower double pivot link **1222** includes proximal and distal pins that engage corresponding holes in the lower tangs **1416** and **1436** of the proximal closure tube segment **1410** and distal closure tube segment **1430**, respectively. As will be discussed in further detail below, distal and proximal axial translation of the closure tube assembly **1400** will result in the closing and opening of the anvil **1130** relative to the elongate channel **1102**.

[0376] As mentioned above, the interchangeable surgical tool assembly **1000** further includes a firing member assembly **1600** that is supported for axial travel within the spine assembly **1500**. In the illustrated embodiment, the firing member assembly **1600** includes an intermediate firing shaft portion **1602** that is configured for attachment to a distal cutting portion or knife bar **1610**. The firing member assembly **1600** may also be referred to herein as a "second shaft" and/or a "second shaft assembly". As can be seen in FIGS. **7-10**, the intermediate firing shaft portion **1602** may include a longitudinal slot **1604** in the distal end thereof which can be configured to receive a tab (not shown) on the proximal end of the knife bar **1610**. The longitudinal slot **1604** and the proximal end of the knife bar **1610** can be sized and configured to permit relative movement therebetween and can comprise a slip joint **1612**. The slip joint **1612** can permit the intermediate firing shaft portion **1602** of the firing member assembly **1600** to be moved to articulate the end effector **1100** without moving, or at least substantially moving, the knife bar **1610**. Once the end effector **1100** has been suitably oriented, the intermediate firing shaft portion **1602** can be advanced distally until a proximal sidewall of the longitudinal slot **1604** comes into contact with the tab on the knife bar **1610** to advance the knife bar **1610** and fire the staple cartridge **1110** positioned within the elongate channel **1102**. As can be further seen in FIGS. **8** and **9**, the elastic spine member **1520** has an elongate opening or window **1525** therein to facilitate assembly and insertion of the intermediate firing shaft portion **1602** into the elastic spine member **1520**. Once the intermediate firing shaft portion **1602** has been inserted therein, a top frame segment **1527** may be engaged with the elastic spine member **1520** to enclose the intermediate firing shaft portion **1602** and knife bar **1610** therein. Further description of the operation of the firing member assembly **1600** may be found in U.S. patent application Ser. No. 13/803,086, now U.S. Patent Application Publication No. 2014/0263541.

[0377] Further to the above, the interchangeable tool assembly **1000** can include a clutch assembly **1620** which can be configured to selectively and releasably couple the articulation driver **1800** to the firing member assembly **1600**. In one form, the clutch assembly **1620** includes a lock collar, or sleeve **1622**, positioned around the firing member assembly **1600** wherein the lock sleeve **1622** can be rotated between an engaged position in which the lock sleeve **1622** couples the articulation driver **1700** to the firing member assembly **1600** and a disengaged position in which the articulation driver **1700** is not operably coupled to the firing member assembly **1600**. When lock sleeve **1622** is in its engaged position, distal movement of the firing member assembly **1600** can move the articulation driver **1700** distally and, correspondingly, proximal movement of the firing member assembly **1600** can move the articulation driver **1700** proximally. When lock sleeve **1622** is in its disengaged position, movement of the firing member assembly **1600** is not transmitted to the articulation driver **1700** and, as a result, the firing member assembly **1600** can move independently of the articulation driver **1700**. In various circumstances, the articulation driver **1700** can be held in position by the articulation lock **1210** when the articulation driver **1700** is not being moved in the proximal or distal directions by the firing member assembly **1600**.

[0378] Referring primarily to FIG. **7**, the lock sleeve **1622** can comprise a cylindrical, or an at least substantially cylindrical, body including a longitudinal aperture **1624** defined therein configured to receive the firing member assembly **1600**. The lock sleeve **1622** can comprise diametrically-opposed, inwardly-facing lock protrusions **1626**, **1628** and an outwardly-facing lock member **1629**. The lock protrusions **1626**, **1628** can be configured to be selectively engaged with the intermediate firing shaft portion **1602** of the firing member assembly **1600**. More particularly, when the lock sleeve **1622** is in its engaged position, the lock protrusions **1626**, **1628** are positioned within a drive notch **1605** defined in the intermediate firing shaft portion **1602** such that a distal pushing force and/or a proximal pulling force can be transmitted from the firing member assembly **1600** to the lock sleeve **1622**. When the lock sleeve **1622** is in its engaged position, the second lock member **1629** is received within a drive notch **1704** defined in the articulation driver **1700** such that the distal pushing force and/or the proximal pulling force applied to the lock sleeve **1622** can be transmitted to the articulation driver **1700**. In effect, the firing member assembly **1600**, the lock sleeve **1622**, and the articulation driver **1700** will move together when the lock sleeve **1622** is in its engaged position. On the other hand, when the lock sleeve **1622** is in its disengaged position, the lock protrusions **1626**, **1628** may not be positioned within the drive notch **1605** of the intermediate firing shaft portion

1602 of the firing member assembly **1600** and, as a result, a distal pushing force and/or a proximal pulling force may not be transmitted from the firing member assembly **1600** to the lock sleeve **1622**. Correspondingly, the distal pushing force and/or the proximal pulling force may not be transmitted to the articulation driver **1700**. In such circumstances, the firing member assembly **1600** can be slid proximally and/or distally relative to the lock sleeve **1622** and the proximal articulation driver **1700**. The clutching assembly **1620** further includes a switch drum **1630** that interfaces with the lock sleeve **1622**. Further details concerning the operation of the switch drum and lock sleeve **1622** may be found in U.S. patent application Ser. No. 13/803,086, now U.S. Patent Application Publication No. 2014/0263541, and Ser. No. 15/019,196. The switch drum **1630** can further comprise at least partially circumferential openings **1632**, **1634** defined therein which can receive circumferential mounts **1305** that extend from the nozzle halves **1302**, **1304** and permit relative rotation, but not translation, between the switch drum **1630** and the proximal nozzle **1300**. See FIG. **6**. Rotation of the nozzle **1300** to a point where the mounts reach the end of their respective slots **1632**, **1634** in the switch drum **1630** will result in rotation of the switch drum **1630** about the shaft axis SA. Rotation of the switch drum **1630** may ultimately result in the movement of the lock sleeve **1622** between its engaged and disengaged positions. In alternative embodiments, the nozzle **1300** may be employed to operably engage and disengage the articulation drive system with the firing drive system. As indicated above, clutch assembly **1620** may operate in the various manners described in further detail in U.S. patent application Ser. No. 13/803,086, now U.S. Patent Application Publication No. 2014/0263541, and U.S. patent application Ser. No. 15/019,196, which have each been herein incorporated by reference in their respective entirety.

[0379] In the illustrated arrangement, the switch drum **1630** includes a an L-shaped slot **1636** that extends into a distal opening **1637** in the switch drum **1630**. The distal opening **1637** receives a transverse pin **1639** of a shifter plate **1638**. In one example, the shifter plate **1638** is received within a longitudinal slot (not shown) that is provided in the lock sleeve **1622** to facilitate axial movement of the lock sleeve **1622** when engaged with the articulation driver **1700**. Further details regarding the operation of the shifter plate and shift drum arrangements may be found in U.S. patent application Ser. No. 14/868,718, filed Sep. 28, 2015, entitled SURGICAL STAPLING INSTRUMENT WITH SHAFT RELEASE, POWERED FIRING AND POWERED ARTICULATION, the entire disclosure of which is hereby incorporated by reference herein.

[0380] As also illustrated in FIGS. **7** and **8**, the interchangeable tool assembly **1000** can comprise a slip ring assembly **1640** which can be configured to conduct electrical power to and/or from the end effector **1100** and/or communicate signals to and/or from the end effector **1100**, back to a microprocessor in the handle assembly or robotic system controller, for example. Further details concerning the slip ring assembly **1640** and associated connectors may be found in U.S. patent application Ser. No. 13/803,086, now U.S. Patent Application Publication No. 2014/0263541, and U.S. patent application Ser. No. 15/019,196 which have each been herein incorporated by reference in their respective entirety as well as in U.S. patent application Ser. No. 13/800,067, entitled STAPLE CARTRIDGE TISSUE THICKNESS SENSOR SYSTEM, now U.S. Patent Application Publication No. 2014/0263552, which is hereby incorporated by reference herein in its entirety. As also described in further detail in the aforementioned patent applications that have been incorporated by reference herein, the interchangeable surgical tool assembly **1000** can also comprise at least one sensor that is configured to detect the position of the switch drum **1630**.

[0381] Referring again to FIG. **7**, the chassis **1800** includes at least one, and preferably two, tapered attachment portions **1802** formed thereon that are adapted to be received within corresponding dovetail slots **507** formed within the distal end portion of the frame **506** of the handle assembly **500** as was discussed above. As can be further seen in FIG. **7**, a shaft attachment lug **1605** is formed on the proximal end of the intermediate firing shaft **1602**. As will be discussed in further detail below, when the interchangeable surgical tool assembly **1000** is coupled to the handle assembly **500**, the shaft attachment lug **1605** is received in a firing shaft attachment cradle **542** that is formed in the distal end of the longitudinal drive member **540**. See FIG. **3**.

[0382] Various interchangeable surgical tool assemblies employ a latch system **1810** for removably coupling the interchangeable surgical tool assembly **1000** to the frame **506** of the handle assembly **500**. As can be seen in FIG. **7**, for example, in at least one form, the latch system **1810** includes a lock member or lock yoke **1812** that is movably coupled to the chassis **1800**. In the illustrated embodiment, for example, the lock yoke **1812** has a U-shape with two spaced downwardly extending legs **1814**. The legs **1814** each have a pivot lug (not shown) formed thereon that are adapted to be received in corresponding holes **1816** formed in the chassis **1800**. Such arrangement facilitates pivotal attachment of the lock yoke **1812** to the chassis **1800**. The lock yoke **1812** may include two proximally protruding lock lugs **1818** that are configured for releasable engagement with corresponding lock detents or grooves **509** in the distal end of the frame **506** of the handle assembly **500**. See FIG. **3**. In various forms, the lock yoke **1812** is biased in the proximal direction by a spring or biasing member **1819**. Actuation of the lock yoke **1812** may be accomplished by a latch button **1820** that is slidably mounted on a latch actuator assembly **1822** that is mounted to the chassis **1800**. The latch button **1820** may be biased in a proximal direction relative to the lock yoke **1812**. The lock yoke **1812** may be moved to an unlocked position by biasing the latch button **1820** the in distal direction which also causes the lock yoke **1812** to pivot out of retaining engagement with the distal end of the frame **506**. When the lock yoke **1812** is in "retaining engagement" with the distal end of the frame **506**, the lock lugs **1818** are retainingly seated within the corresponding lock detents or grooves **509** in the distal end of the frame **506**.

[0383] In the illustrated arrangement, the lock yoke **1812** includes at least one and preferably two lock hooks **1824** that are adapted to contact corresponding lock lug portions **1426** that are formed on the closure shuttle **1420**. When the closure shuttle **1420** is in an unactuated position, the lock yoke **1812** may be pivoted in a distal direction to unlock the interchangeable surgical tool assembly **1000** from the handle assembly **500**. When in that position, the lock hooks **1824** do not contact the lock lug portions **1426** on the closure shuttle **1420**. However, when the closure shuttle **1420** is moved to an actuated position, the lock yoke **1812** is prevented from

being pivoted to an unlocked position. Stated another way, if the clinician were to attempt to pivot the lock yoke **1812** to an unlocked position or, for example, the lock yoke **1812** was in advertently bumped or contacted in a manner that might otherwise cause it to pivot distally, the lock hooks **1824** on the lock yoke **1812** will contact the lock lugs **1426** on the closure shuttle **1420** and prevent movement of the lock yoke **1812** to an unlocked position.

[0384] Still referring to FIG. **10**, the knife bar **1610** may comprise a laminated beam structure that includes at least two beam layers. Such beam layers may comprise, for example, stainless steel bands that are interconnected by, for example, welding or pinning together at their proximal ends and/or at other locations along their length. In alternative embodiments, the distal ends of the bands are not connected together to allow the laminates or bands to splay relative to each other when the end effector is articulated. Such arrangement permits the knife bar **1610** to be sufficiently flexible to accommodate articulation of the end effector. Various laminated knife bar arrangements are disclosed in U.S. patent application Ser. No. 15/019,245. As can also be seen in FIG. **10**, a middle support member **1614** is employed to provide lateral support to the knife bar **1610** as it flexes to accommodate articulation of the surgical end effector **1100**. Further details concerning the middle support member and alternative knife bar support arrangements are disclosed in U.S. patent application Ser. No. 15/019,245. As can also be seen in FIG. **10**, a firing member or knife member **1620** is attached to the distal end of the knife bar **1610**.

[0385] FIG. **11** illustrates one form of a firing member **1660** that may be employed with the interchangeable tool assembly **1000**. In one exemplary form, the firing member **1660** comprises a body portion **1662** that includes a proximally extending connector member **1663** that is configured to be received in a correspondingly shaped connector opening **1614** in the distal end of the knife bar **1610**. See FIG. **10**. The connector **1663** may be retained within the connector opening **1614** by friction and/or welding or suitable adhesive, etc. The body portion **1662** protrudes through an elongate slot **1104** in the elongate channel **1102** and terminates in a foot member **1664** that extends laterally on each side of the body portion **1662**. As the firing member **1660** is driven distally through the surgical staple cartridge **1110**, the foot member **1664** rides within a passage **1105** in the elongate channel **1102** that is located under the surgical staple cartridge **1110**. As can be seen in FIG. **11**, one form of the firing member **1660** may further include laterally protruding central tabs, pins or retainer features **1680**. As the firing member **1660** is driven distally through the surgical staple cartridge **1110**, the central retainer features **1680** ride on the inner surface **1106** of the elongate channel **1102**. The body portion **1662** of the firing member **1660** further includes a tissue cutting edge or feature **1666** that is disposed between a distally protruding hook feature **1665** and a distally protruding top nose portion **1670**. As can be further seen in FIG. **11**, the firing member **1660** may further include two laterally extending top tabs, pins or anvil engagement features **1665**. As the firing member **1660** is driven distally, a top portion of the body **1662** extends through a centrally disposed anvil slot **1138** and the top anvil engagement features **1672** ride on corresponding ledges **1136** formed on each side of the anvil slot **1134**. See FIGS. **13** and **14**.

[0386] Returning to FIG. **10**, the firing member **1660** is configured to operably interface with a sled assembly **1120** that is operably supported within the body **1111** of the surgical staple cartridge **1110**. The sled assembly **1120** is slidably displaceable within the surgical staple cartridge body **1111** from a proximal starting position adjacent the proximal end **1112** of the cartridge body **1111** to an ending position adjacent a distal end **1113** of the cartridge body **1111**. The cartridge body **1111** operably supports therein a plurality of staple drivers (not shown) that are aligned in rows on each side of a centrally disposed slot **1114**. The centrally disposed slot **1114** enables the firing member **1660** to pass therethrough and cut the tissue that is clamped between the anvil **1130** and the staple cartridge **1110**. The drivers are associated with corresponding pockets **1116** that open through the upper deck surface **1115** of the cartridge body. Each of the staple drivers supports one or more surgical staple or fastener (not shown) thereon. The sled assembly **1120** includes a plurality of sloped or wedge-shaped cams **1122** wherein each cam **1122** corresponds to a particular line of fasteners or drivers located on a side of the slot **1114**. In the illustrated example, one cam **1122** is aligned with one line of "double" drivers that each support two staples or fasteners thereon and another cam **1122** is aligned with another line of "single" drivers on the same side of the slot **1114** that each operably support a single surgical staple or fastener thereon. Thus, in the illustrated example, when the surgical staple cartridge **1110** is "fired", there will be three lines of staples on each lateral side of the tissue cut line. However, other cartridge and driver configurations could also be employed to fire other staple/fastener arrangements. The sled assembly **1120** has a central body portion **1124** that is configured to be engaged by the hook portion **1665** of the firing member **1660**. Thus, when the firing member **1660** is fired or driven distally, the firing member **1660** drives the sled assembly **1120** distally as well. As the firing member **1660** moves distally through the cartridge **1110**, the tissue cutting feature **1666** cuts the tissue that is clamped between the anvil assembly **1130** and the cartridge **1110** and the sled assembly **1120** drives the drivers upwardly in the cartridge which drive the corresponding staples or fasteners into forming contact with the anvil assembly **1130**.

[0387] In those embodiments wherein the firing member includes a tissue cutting surface, it may be desirable for the elongate shaft assembly to be configured in such a way so as to prevent the inadvertent advancement of the firing member unless an unspent staple cartridge is properly supported in the elongate channel **1102** of the surgical end effector **1100**. If, for example, no staple cartridge is present at all and the firing member is distally advanced through the end effector, the tissue would be severed, but not stapled. Similarly, if a spent staple cartridge (i.e., a staple cartridge wherein at least some of the staples have already been fired therefrom) is present in the end effector and the firing member is advanced, the tissue would be severed, but may not be completely stapled, if at all. It will be appreciated that such occurrences could lead to undesirable catastrophic results during the surgical procedure. U.S. Pat. No. 6,988,649 entitled SURGICAL STAPLING INSTRUMENT HAVING A SPENT CARTRIDGE LOCKOUT, U.S. Pat. No. 7,044,352 entitled SURGICAL STAPLING INSTRUMENT HAVING A SINGLE LOCKOUT MECHANISM FOR PREVENTION OF FIRING, and U.S. Pat. No. 7,380,695 entitled SURGICAL STAPLING INSTRUMENT HAVING A SINGLE LOCKOUT MECHANISM FOR PREVENTION OF FIRING, and U.S. patent application Ser. No.

14/742,933, entitled SURGICAL STAPLING INSTRUMENTS WITH LOCKOUT ARRANGEMENTS FOR PREVENTING FIRING SYSTEM ACTUATION WHEN A CARTRIDGE IS SPENT OR MISSING each disclose various firing member lockout arrangements. Each of those references is hereby incorporated by reference in its entirety herein.

[0388] An "unfired", "unspent", "fresh" or "new" cartridge **1110** means herein that the cartridge **1110** has all of its fasteners in their "ready-to-be-fired positions". When in that position, the sled assembly **1120** is located in its starting position. The new cartridge **1110** is seated within the elongate channel **1102** and may be retained therein by snap features on the cartridge body that are configured to retainingly engage corresponding portions of the elongate channel **1102**. FIGS. **15** and **18** illustrate a portion of the surgical end effector **1100** with a new or unfired surgical staple cartridge **1110** seated therein. As can be seen in those Figures, the sled assembly **1120** is in the starting position. To prevent the firing system from being activated and, more precisely, to prevent the firing member **1660** from being distally driven through the end effector **1110** unless an unfired or new surgical staple cartridge has been properly seated within the elongate channel **1102**, the illustrated interchangeable surgical tool assembly **1000** employs a firing member lockout system generally designated as **1650**.

[0389] Referring now to FIGS. **10** and **15-19**, in one form, the firing member lockout system **1650** includes movable lock member **1652** that is configured to retainingly engage the firing member **1660** when a surgical staple cartridge **1110** is not properly seated within the elongate channel **1102**. The lock member **1652** comprises at least one laterally moving locking portion **1654** that is configured to retainingly engage a corresponding portion of the firing member when the sled assembly **1120** is not present within the cartridge **1110** in its starting position. In the illustrated arrangement, the lock member **1652** employs two laterally moving locking portions **1654** wherein each locking portion **1654** engages a laterally extending portion of the firing member **1660**.

[0390] In the illustrated embodiment, the lock member **1652** comprises a generally U-shaped spring member wherein each laterally movable leg or locking portion **1654** extends from a central spring portion **1653** and is configured to move in lateral directions represented by "L" in FIGS. **18** and **19**. It will be appreciated that the term "lateral directions" refers to directions that are transverse to the shaft axis SA. The spring or lock member **1652** may be fabricated from high strength spring steel or similar material. The central spring portion **1653** may be seated within a slot **1236** in the end effector mounting assembly **1230**. See FIG. **10**. As can be seen in FIGS. **15-17**, each of the laterally movable legs or locking portions **1654** has a distal end **1656** with a locking window **1658** therein. When the locking member **1652** is in a locked position, the central retainer feature **1680** on each lateral side extends into the corresponding locking window **1658** to retainingly prevent the firing member from being distally axially advanced.

[0391] Operation of the firing member lock out system will be explained with reference to FIGS. **15-19**. FIGS. **15** and **18** illustrate a portion of the surgical end effector **1100** with a new unfired cartridge **1110** properly installed therein. As can be seen in those Figures, the sled assembly **1120** includes an unlocking feature **1126** that corresponds to each of the laterally movable locking portion **1654**. In the illustrated arrangement, an unlocking feature **1126** is provided on or extends proximally from each of the central wedge-shaped cams **1122**. In alternative arrangements, the unlocking feature **1126** may comprise a proximally protruding portion of the corresponding wedge-shaped cam **1122**. As can be seen in FIG. **18**, when the sled assembly **1120** is in its starting position, the unlocking features **1124** engage and bias the corresponding locking portions **1654** laterally in a direction that is transverse to the shaft axis SA. When the locking portions **1654** are in those unlocked orientations, the central retainer features **1680** are not in retaining engagement with their corresponding locking window **1658**. When in those orientations, the firing member **1660** may be distally axially advanced (fired). However, when a cartridge is not present in the elongate channel **1102** or the sled assembly has been moved out of its starting position (meaning the cartridge is partially or completely fired), the locking portions **1654** spring laterally into retaining engagement with the firing member **1660**. When in that position as illustrated in FIG. **19**, the firing member **1660** cannot be moved distally.

[0392] FIGS. **16** and **17** illustrate the retraction of the firing member **1660** back to the starting position after firing the cartridge **1110** and driving the sled assembly **1120** distally. FIG. **16** depicts the initial reengagement of the retaining feature **1680** into its corresponding locking window **1658**. FIG. **17** illustrates the retaining feature in its locked position when the firing member **1660** has been fully retracted back to its starting position. To assist in the lateral displacement of the locking portions **1654** when they are each initially contacted by the proximally moving retaining features **1680**, each of the retaining features **1680** may be provided with a proximally facing, laterally tapered end portion. Such lockout system prevents actuation of the firing member **1660** when a new unfired cartridge is not present or when a new unfired cartridge is present, but has not been properly seated in the elongate channel **1102**. In addition, the lockout system may prevent the clinician from distally advancing the firing member in the case where a spent or partially fired cartridge has been inadvertently properly seated within the elongate channel. Another advantage that may be provided by the lockout system **1650** is that, unlike other firing member lock out arrangements that require movement of the firing member into and out of alignment with the corresponding slots/passages in the staple cartridge, the firing member **1660** remains in alignment with the cartridge passages while in the locked and unlocked position. The locking portions **1654** are designed to move laterally into and out of engagement with corresponding sides of the firing member. Such lateral movement of the locking portions or portion is distinguishable from other locking arrangements that move in vertical directions to engage and disengage portions of the firing member.

[0393] Returning to FIGS. **13** and **14**, in one form, the anvil **1130** includes an elongated anvil body portion **1132** and a proximal anvil mounting portion **1150**. The elongated anvil body portion **1132** includes an outer surface **1134** that defines two downwardly extending tissue stop members **1136** that are adjacent to the proximal anvil mounting portion **1150**. The elongated anvil body portion **1132** also includes an underside **1135** that defines an elongate anvil slot **1138**. In the illustrated arrangement shown in FIG. **14**, the anvil slot **1138** is centrally disposed in the underside **1135**. The underside **1135** includes three rows **1140**, **1141**,

1142 of staple forming pockets **1143**, **1144** and **1145** located on each side of the anvil slot **1138**. Adjacent each side of the anvil slot **1138** are two elongate anvil passages **1146**. Each passage **1146** has a proximal ramp portion **1148**. See FIG. **13**. As the firing member **1660** is advanced distally, the top anvil engagement features **1632** initially enter the corresponding proximal ramp portions **1148** and into the corresponding elongate anvil passages **1146**.

[0394] Turning to FIGS. **12** and **13**, the anvil slot **1138**, as well as the proximal ramp portion **1148**, extend into the anvil mounting portion **1150**. Stated another way, the anvil slot **1138** divides or bifurcates the anvil mounting portion **1150** into two anvil attachment flanges **1151**. The anvil attachments flanges **1151** are coupled together at their proximal ends by a connection bridge **1153**. The connection bridge **1153** serves to provide support to the anvil attachment flanges **1151** and can serve to make the anvil mounting portion **1150** more rigid than the mounting portions of other anvil arrangements wherein the anvil attachment flanges are not connected at their proximal ends. As can also be seen in FIGS. **12** and **14**, the anvil slot **1138** has a wide portion **1139** to accommodate the top portion and top anvil engagement features **1632** of the firing member **1660**.

[0395] As can be seen in FIGS. **13** and **20-24**, each of the anvil attachment flanges **1151** includes a transverse mounting hole **1156** that is configured to receive a pivot pin **1158** (FIGS. **10** and **20**) therethrough. The anvil mounting portion **1150** is pivotally pinned to the proximal end **1103** of the elongate channel **1102** by the pivot pin **1158** which extends through mounting holes **1107** in the proximal end **1103** of the elongate channel **1102** and the mounting hole **1156** in anvil mounting portion **1150**. Such arrangement serves to pivotally affix the anvil **1130** to the elongate channel **1102** for selective pivotal travel about a fixed anvil axis A-A which is transverse to the shaft axis SA. See FIG. **5**. The anvil mounting portion **1150** also includes a cam surface **1152** that extends from a centralized firing member parking area **1154** to the outer surface **1134** of the anvil body portion **1132**.

[0396] In the illustrated arrangement, the anvil **1130** is moved between an open position and closed positions by axially advancing and retracting the distal closure tube segment **1430**. As will be discussed in further detail below, a distal end portion of the distal closure tube segment **1430** has an internal cam surface formed thereon that is configured to cammingly engage the cam surface **1552** or cam surfaces formed on the anvil mounting portion **1150**. FIG. **22** illustrates a cam surface **1152***a* formed on the anvil mounting portion **1150** so as to establish a single contact path **1155***a* with the internal cam surface **1444**, for example, on the distal closure tube segment **1430**. FIG. **23** illustrates a cam surface **1152***b* that is configured relative to the internal cam surface **1444** on the distal closure tube segment to establish two separate and distinct arcuate contact paths **1155***b* between the cam surface **1152** on the anvil mounting portion **1150** and internal cam surface **1444** on the distal closure tube segment **1430**. In addition to other potential advantages discussed herein, such arrangement may serve to better distribute the closure forces from the distal closure tube segment **1430** to the anvil **1130**. FIG. **24** illustrates a cam surface **1152***c* that is configured relative to the internal cam surface **1444** of the distal closure tube segment **1430** to establish three distinct zones of contact **1155***c* and **1155***d* between the cam surfaces on the anvil mounting portion **1150** and the distal closure tube segment **1430**. The zones **1155***c*, **1155***d* establish larger areas of camming contact between the cam surface or cam surfaces on the distal closure tube segment **1430** and the anvil mounting portion **1150** and may serve to better distribute the closure forces to the anvil **1130**.

[0397] As the distal closure tube segment **1430** cammingly engages the anvil mounting portion **1150** of the anvil **1130**, the anvil **1130** is pivoted about the anvil axis AA which results in the pivotal movement of the distal end of the end **1133** of elongate anvil body portion **1132** toward the surgical staple cartridge **1110** and distal end **1105** of the elongate channel **1102**. As the anvil body portion **1132** begins to pivot, it contacts the tissue that is to be cut and stapled which is now positioned between the underside **1135** of the elongate anvil body portion **1132** and the deck **1116** of the surgical staple cartridge **1110**. As the anvil body portion **1132** is compressed onto the tissue, the anvil **1130** may experience considerable amounts of resistive forces. These resistive forces are overcome as the distal closure tube **1430** continues its distal advancement. However, depending upon their magnitudes and points of application to the anvil body portion **1132**, these resistive forces could tend to cause portions of the anvil **1130** to flex which may generally be undesirable. For example, such flexure may cause misalignment between the firing member **1660** and the passages **1148**, **1146** within the anvil **1130**. In instances wherein the flexure is excessive, such flexure could significantly increase the amount of firing force required to fire the instrument (i.e., drive the firing member **1660** through the tissue from its starting to ending position). Such excessive firing force may result in damage to the end effector, and/or the firing member, and/or the knife bar, and/or the firing drive system components, etc. Thus, it may be advantageous for the anvil to be constructed so as to resist such flexure.

[0398] FIGS. **25-27** illustrate an alternative anvil embodiment that includes features that may improve the stiffness of the anvil body and its resistance to flexure forces that may be generated during the closing and/or firing processes. The anvil **1130'** may otherwise be identical in construction to the anvil **1130** described above except for the differences discussed herein. As can be seen in those Figures, the anvil **1130'** has an elongate anvil body **1132'** that has an upper body portion **1165** that has an anvil cap **1170** attached thereto. In the embodiment depicted in FIGS. **25-27**, the anvil cap **1170** is roughly rectangular in shape and has an outer cap perimeter **1172**. The perimeter **1172** of the anvil cap **1170** is configured to be inserted through the correspondingly-shaped opening **1137** formed in the upper body portion **1165** and received on axially extending internal ledge portions **1139** formed therein. See FIG. **27**. The internal ledge portions **1139** are configured to support the corresponding long sides **1177** of the anvil cap **1170**. In an alternative embodiment, the anvil cap **1170** may be slide onto the internal ledges **1139** through an opening (not shown) in the distal end **1133** of the anvil body **1132'**. In yet another embodiment, no internal ledge portions are provided. The anvil body **1132'** and the anvil cap **1170** may be fabricated from suitable metal that is conducive to welding. A first weld **1178** may extend around the entire cap perimeter **1172** of the anvil cap **1170** or it may only be located along the long sides **1177** of the anvil cap **1170** and not the distal end **1173** and/or proximal end **1175** thereof. The first weld **1178** may be continuous or it may be discontinuous or

intermittent. In those embodiments where the first weld **1178** is discontinuous or intermittent, the weld segments may be equally distributed along the long sides **1177** of the anvil cap **1170** or the weld segments may be more densely spaced closer to the distal ends of the long sides **1177** or more densely spaced closer to the proximal ends of the long sides **1177**. In still other arrangements, the weld segments may be more densely spaced in the center areas of the long sides **1177** of the anvil cap **1170**.

[0399] FIGS. **28-30** illustrate an anvil cap **1170'** that is configured to be "mechanically interlocked" to the anvil body **1132'** as well as welded to the upper body portion **1165**. In this embodiment, a plurality of retention formations **1182** are formed into the wall **1180** of the upper body portion **1165** that defines opening **1137**. As used in this context, the term "mechanically interlocked" means that the anvil cap will remain affixed to the elongate anvil body regardless of the orientation of the elongate anvil body and without any additional retaining or fastening such as welding and/or adhesive, for example. The retention formations **1182** may protrude inwardly into the opening **1137** from the opening wall **1180**. The retention formations **1182** may be integrally formed into the wall **1180** or otherwise be attached thereto. The retention formations **1182** are designed to frictionally engage a corresponding portion of the anvil cap **1170'** when it is installed in the opening **1137** to frictionally retain the anvil cap **1170'** therein. In the illustrated embodiment, the retention formations **1182** protrude inwardly into the opening **1137** and are configured to be frictionally received within a correspondingly shaped engagement area **1184** formed in the outer perimeter **1172'** of the anvil cap **1170'**. In the illustrated arrangement, the retention formations **1182** only correspond to the long sides **1177'** of the anvil cap **1170'** and are not provided in the portions of the wall **1180** that correspond to the distal end **1173** or proximal end **1175** of the anvil cap **1170'**. In alternative arrangements, the retention formations **1182** may also be provided in the portions of the wall **1180** that correspond to the distal end **1173** and proximal end **1175** of the anvil cap **1170'** as wall as the long sides **1177'** thereof. In still other arrangements, the retention formations **1182** may only be provided in the portions of the wall **1180** that correspond to one or both of the distal and proximal ends **1173**, **1175** of the anvil cap **1170'**. In still other arrangements, the retention formations **1182** may be provided in the portions of the wall **1180** corresponding to the long sides **1177'** and only one of the proximal and distal ends **1173**, **1175** of the anvil cap **1170'**. It will be further understood that the retention protrusions in all of the foregoing embodiments may be alternatively formed on the anvil cap with the engagement areas being formed in the elongate anvil body.

[0400] In the embodiment illustrated in FIGS. **28-30**, the retention formations **1182** are equally spaced or equally distributed along the wall portions **1180** that correspond to the long sides **1177'** of the anvil cap **1170'**. In alternative embodiments, the retention formations **1182** may be more densely spaced closer to the distal ends of the long sides **1177'** or more densely spaced closer to the proximal ends of the long sides **1177'**. Stated another way, the spacing between those retention formations adjacent the distal end, the proximal end or both the distal and proximal ends may be less than the spacing of the formations located in the central portion of the anvil cap **1170'**. In still other arrangements, the retention formations **1182** may be more densely spaced in the center areas of the long sides **1177'** of the anvil cap **1170'**. Also in alternative embodiments, the correspondingly shaped engagement areas **1184** may not be provided in the outer perimeter **1172'** or in portions of the outer perimeter **1172'** of the anvil cap **1170'**. In other embodiments, the retention formations and correspondingly shaped engagement areas may be provided with different shapes and sizes. In alternative arrangements, the retention formations may be sized relative to the engagement areas so that there is no interference fit therebetween. In such arrangements, the anvil cap may be retained in position by welding, adhesive, etc.

[0401] In the illustrated example, a weld **1178'** may extend around the entire perimeter **1172'** of the anvil cap **1170'** or the weld **1178'** may only be located along the long sides **1177'** of the anvil cap **1170'** and not the distal end **1173** and/or proximal end **1175** thereof. The weld **1178'** may be continuous or it may be discontinuous or intermittent. In those embodiments where the weld **1178'** is discontinuous or intermittent, the weld segments may be equally distributed along the long sides **1177'** of the anvil cap **1170'** or the weld segments may be more densely spaced closer to the distal ends of the long sides **1177'** or more densely spaced closer to the proximal ends of the long sides **1177'**. In still other arrangements, the weld segments may be more densely spaced in the center areas of the long sides **1177'** of the anvil cap **1170'**.

[0402] FIGS. **31** and **32** illustrate another anvil arrangement **1130"** that is has an anvil cap **1170"** attached thereto. In the depicted example, the anvil cap **1170"** is roughly rectangular in shape and has an outer cap perimeter **1172"**. The outer cap perimeter **1172"** is configured to be inserted through the correspondingly-shaped opening **1137"** in upper body portion **1165** of the anvil body **1132"** and received on axially extending internal ledge portions **1139"** and **1190"** formed therein. See FIG. **32**. The ledge portions **1139"** and **1190"** are configured to support the corresponding long sides **1177"** of the anvil cap **1170"**. In an alternative embodiment, the anvil cap **1170"** may be slid onto the internal ledges **1139"** and **1190"** through an opening (not shown) in the distal end **1133"** of the anvil body **1132'**. The anvil body **1132"** and the anvil cap **1170"** may be fabricated from metal material that is conducive to welding. A first weld **1178"** may extend around the entire perimeter **1172"** of the anvil cap **1170"** or it may only be located along the long sides **1177"** of the anvil cap **1170"** and not the distal end **1173"** and/or proximal end (not shown) thereof. The weld **1178"** may be continuous or it may be discontinuous or intermittent. It will be appreciated that the continuous weld embodiment has more weld surface area due to the irregularly shape perimeter of the anvil cap **1170"** as compared to the embodiments with a straight perimeter sides such as the anvil caps shown in FIG. **26**, for example. In those embodiments where the weld **1178"** is discontinuous or intermittent, the weld segments may be equally distributed along the long sides **1177"** of the anvil cap **1170"** or the weld segments may be more densely spaced closer to the distal ends of the long sides **1177"** or more densely spaced closer to the proximal ends of the long sides **1177"**. In still other arrangements, the weld segments may be more densely spaced in the center areas of the long sides **1177"** of the anvil cap **1170"**.

[0403] Still referring to FIGS. **31** and **32**, the anvil cap **1170"** may be additionally welded to the anvil body **1132"** by a plurality of second discrete "deep" welds **1192"**. For

example, each weld **1192"** may be placed at the bottom of a corresponding hole or opening **1194"** provided through the anvil cap **1170"** so that a discrete weld **1192"** may be formed along the portion of the anvil body **1132"** between the ledges **1190"** and **1139"**. See FIG. **32**. The welds **1192"** may be equally distributed along the long sides **1177"** of the anvil cap **1170"** or the welds **1192"** may be more densely spaced closer to the distal ends of the long sides **1177"** or more densely spaced closer to the proximal ends of the long sides **1177"**. In still other arrangements, the welds **1192"** may be more densely spaced in the center areas of the long sides **1177"** of the anvil cap **1170"**.

[0404] FIG. **33** illustrates another anvil cap **1170'"** that is configured to be mechanically interlocked to the anvil body **1132'"** as well as welded to the upper body portion **1165**. In this embodiment, a "tongue-in-groove" arrangement is employed along each long side **1177'"** of the anvil cap **1170'"**. In particular, a laterally extending continuous or intermittent tab **1195'"** protrudes from each of the long sides **1177'"** of the anvil cap **1170'"**. Each tab **1195'"** corresponds to an axial slot **1197'"** formed in the anvil body **1132'"**. The anvil cap **1170'"** is slid in from an opening (not shown) in the distal end of the anvil body **1132'"** to "mechanically" affix the anvil cap to the anvil body **1132'"**. The tabs **1195'"** and slots **1197'"** may be sized relative to each other to establish a sliding frictional fit therebetween. In addition, the anvil cap **1170'"** may be welded to the anvil body **1132'"**. The anvil body **1132'"** and the anvil cap **1170'"** may be fabricated from metal that is conducive to welding. The weld **1178'"** may extend around the entire perimeter **1172'"** of the anvil cap **1170'"** or it may only be located along the long sides **1177'"** of the anvil cap **1170'"**. The weld **1178'"** may be continuous or it may be discontinuous or intermittent. In those embodiments where the weld **1178'"** is discontinuous or intermittent, the weld segments may be equally distributed along the long sides **1177'"** of the anvil cap **1170'"** or the weld segments may be more densely spaced closer to the distal ends of the long sides **1177'"** or more densely spaced closer to the proximal ends of the long sides **1177'"**. In still other arrangements, the weld segments may be more densely spaced in the center areas of the long sides **1177'"** of the anvil cap **1170'"**.

[0405] The anvil embodiments described herein with anvil caps may provide several advantages. One advantage for example, may make the anvil and firing member assembly process easier. That is, the firing member may be installed through the opening in the anvil body while the anvil is attached to the elongate channel. Another advantage is that the upper cap may improve the anvil's stiffness and resistance to the above-mentioned flexure forces that may be experienced when clamping tissue. By resisting such flexure, the frictional forces normally encountered by the firing member **1660** may be reduced. Thus, the amount of firing force required to drive the firing member from its starting to ending position in the surgical staple cartridge may also be reduced.

[0406] As indicated above, as the anvil **1130** begins to pivot, the anvil body **1132** contacts the tissue that is to be cut and stapled which is positioned between the undersurface of the elongate anvil body **1132** and the deck of the surgical staple cartridge **1110**. As the anvil body **1132** is compressed onto the tissue, the anvil **1130** may experience considerable amounts of resistive forces. To continue the closure process, these resistive forces must be overcome by the distal closure tube segment **1430** as it cammingly contacts the anvil mounting portion **1150**. These resistive forces may be generally applied to the distal closure tube segment **1430** in the vertical directions V which, if excessive, could conceivably cause the distal closure tube segment **1430** to expand or elongate in the vertical direction (distance ID in FIG. **31** may increase). If the distal closure tube **1430** elongates in the vertical directions, the distal closure tube segment **1430** may not be able to effectively close the anvil **1130** and retain the anvil **1130** in the fully closed position. If that condition occurs, the firing member **1660** may encounter dramatically higher resistance which will then require higher firing forces to distally advance the firing member.

[0407] FIGS. **34** and **35** illustrate one form of a closure member for applying a closure motion to a movable jaw of a surgical instrument. In the illustrated arrangement, the closure member comprises, for example, a distal closure tube segment **1430** that has a closure body portion **1470**. As discussed above, one form of the interchangeable surgical tool assembly **1000** is configured so as to facilitate selective articulation of the surgical end effector **1100**. To facilitate such articulation, the distal closure tube segment **1430** is movably coupled to the proximal closure tube segment **1410** by means of an upper tang **1434** and a lower tang **1436** and upper and lower double pivot links **1220** and **1222**. See FIG. **10**. In one arrangement, the distal closure tube segment **1430** may be machined or otherwise formed from round bar stock manufactured from, for example, suitable metal material. In the illustrated arrangement, the closure body **1470** has an outer surface **1431** and an inner surface **1433** that defines an upper wall portion **1440** that has an upper wall cross-sectional thickness UWT and a lower wall portion **1442** that has a lower wall thickness LWT. The upper wall portion **1440** is located above the shaft axis SA and the lower wall portion **1442** is located below the shaft axis SA. The distal end **1441** of the upper wall portion **1440** has an internal cam surface **1444** formed thereon at a cam angle Θ. Also in the illustrated embodiment, UWT>LWT which serves to provide a longer internal cam surface **1444** than might other wise be attainable if the distal closure tube segment has a uniform wall thickness. A long internal cam surface may be advantageous for transferring the closure forces to the cam surface(s) on the anvil mounting portion **1150**. As can also be seen in FIGS. **34** and **35**, the transitional sidewalls **1446**, **1448** that are located on each side of the shaft axis SA between the upper wall portion **1440** and the lower wall portion **1442** comprise generally flat, vertically extending internal sidewall surfaces **1451**, **1453** that may be generally parallel to each other. The transitional sidewalls **1446**, **1448** each have a wall thickness that transitions from the upper wall thickness to the lower wall thickness.

[0408] In the illustrated arrangement, the distal closure tube segment **1430** also includes positive jaw or anvil opening features **1462** that correspond to each of the sidewalls **1446** and **1448** and protrude inwardly therefrom. As can be seen in FIGS. **34** and **35**, the anvil opening features **1462** are formed on a lateral mounting body **1460** that sized to be received within a correspondingly-shaped cavity **1447**, **1449** machined or otherwise formed in the transitional sidewalls **1446**, **1448** adjacent the distal end **1438** of the distal closure tube segment **1430**. The positive anvil opening features **1462** extend inwardly through corresponding openings **1450**, **1452** in the transitional sidewalls **1446**, **1448**. In the illustrated arrangement, the lateral mounting bodies

1460 are welded to the distal closure tube segment **1430** with welds **1454**. In addition to the welds or in alternative to the welds, the lateral mounting bodies **1460** may be retained in place with a mechanical/frictional fit, tongue-in-groove arrangements, adhesive, etc.

[0409] FIGS. **36-41** illustrate one example of the use of the distal closure tube segment **1430** to move the anvil **1130** from a fully closed position to a fully open position. FIGS. **36** and **39** illustrate the position of the distal closure tube segment **1430** and, more particularly the position of one of the positive anvil opening features **1462** when the distal closure tube segment **1430** is in the fully closed position. In the illustrated example, an anvil opening ramp **1162** is formed on the underside of each of the anvil attachment flanges **1151**. When the anvil **1130** and the distal closure tube segment **1430** are in their fully closed positions shown in FIG. **36**, each of the positive anvil opening features **1462** is located in a cavity **1164** that is established between the anvil opening ramps **1162** and the bottom portion of the elongate channel **1102**. When in that position, the positive anvil opening features **1462** do not contact the anvil mounting portion **1150** or at least do not apply any significant opening motions or forces thereto. FIGS. **37** and **40** illustrate the positions of the anvil **1130** and the distal closure tube segment **1430** upon the initial application of an opening motion in the proximal direction PD to the distal closure tube segment **1430**. As can be seen in FIG. **37**, the positive jaw opening features **1462** have initially contacted the anvil opening ramps **1164** to cause the anvil **1130** to start pivoting to an open position. In the illustrated arrangement, each of the positive anvil opening features **1462** has a ramped or rounded distal end **1463** to facilitate better camming contact with the corresponding anvil opening ramp **1162**. In FIGS. **38** and **41**, the distal closure tube segment **1430** has been retracted back to its fully retracted position which has caused the positive anvil opening features **1462** to be driven to the distal ends of the anvil opening ramps **1162** which causes the anvil **1130** to be pivoted to its fully open position as shown therein. Other embodiments may not employ the positive jaw opening features, but may rely on springs or other biasing arrangements to bias the anvil to the open position when the distal closure tube segment has been retracted to its proximal-most starting position.

[0410] FIGS. **42** and **43** illustrate another closure member for applying closure motions to a movable jaw of a surgical instrument. In this example, the closure member comprises a distal closure tube segment **1430'** that may be similar to the distal closure tube segment **1430** without the positive anvil opening features. The distal closure tube segment **1430'** has a closure body **1470'** that has an outer surface **1440'** and an inner surface **1433'** that define an upper wall portion **1440'** and a lower wall portion **1442'**. As indicated above, it may be desirable to employ as large of internal camming surface **1444'** as possible in order to maximize the camming contact with the camming surface on the anvil mounting portion **1150** to thereby effectively transfer the closure forces thereto. Thus, the upper wall portion **1440'** of the distal closure tube segment **1430'** may be provided with the thickest wall thickness UWT and the lower portion of the distal closure tube segment **1430'** may have the thinnest wall thickness LWT. For reference purposes, the UWT and LWT are measured along a common reference line that extends through a center axis or point C of the distal closure tube segment **1430'**. Thus, where UWT is diametrically opposite from LWT, UWT>LWT. Such wall thickness arrangements facilitate formation of a longer internal camming surface **1444'**.

[0411] As can be seen in FIG. **43**, the distal closure tube segment **1430'** has an outer surface **1431'** that has circular cross-sectional shape. The distal closure tube segment **1430'** may be machined from solid bar stock. In the illustrated example, internal radius R_1 from a first center axis A_{inner} extends to the inner surface **1433'** and the outer radius R_2 from a second center axis A_{outer} extends to the outer surface **1431'**. In the illustrated example, axis A_{inner} is offset by distance OR from axis A_{outer} and $R_2>R_1$.

[0412] FIG. **44** illustrates another closure member for applying closure motions to a movable jaw of a surgical instrument. In this example, the closure member comprises a distal closure tube segment **1430"** that has a closure body **1470"**. The closure body **1470"** has an outer surface **1431'** and an inner surface **1433"** that define an upper wall portion **1440"** that has an upper wall thickness UWT and a lower wall portion **1442"** that has a lower wall thickness LWT and two sidewall portions **1435'** that each has a sidewall thickness SWT. In the illustrated example, UWT>LWT. In addition, SWT>UWT. Thus, SWT>UWT>LWT. In the illustrated arrangement, sidewall portions **1435'** have the same sidewall thickness SWT. In other arrangements, the sidewall portions **1435'** may have different thicknesses. As can be seen in FIG. **44**, each sidewall portion **1435'** defines an internal, vertically extending internal surface portion **1437'**. In the illustrated embodiment, the vertically extending internal surface portions are approximately parallel to each other. Such thicker vertical sidewall portions **1435'** may help to prevent or at least minimize the vertical elongation of the distal closure tube segment **1430"** when in use.

[0413] In the example depicted in FIG. **45**, R_1 and R_2 are measured from a common center point or center axis C and $R_1>R_2$. Each of the sidewall portions **1435"** of the closure body portion **1470'"** of the distal closure tube segment **1430'"** that extend between the upper portion **1431"** and **1433"** have a sidewall thickness SWT that is approximately equal to the UWT at points along a horizontal reference line HR. The horizontal reference line HR is perpendicular to a vertical reference line VR that extends through the center axis C and along which the UWT and LWT may be measured and compared. Thus, SWT=UWT. In other examples, SWT, when measured along the horizontal reference line HR may be slightly less than the UWT. The SWT may continue to decrease until the side wall portions **1435'** transition into the lower portion **1433'** that has a constant lower wall thickness LWT. Thus, the inner sidewalls **1437"** extend at an angle A_2 when measured from a corresponding vertical reference axis VR' that is perpendicular to the horizontal reference axis HR and parallel to vertical reference axis VR.

[0414] FIG. **46** illustrates another closure member for applying closure motions to a movable jaw of a surgical instrument. In this example, the closure member comprises a distal closure tube segment **1430"** that has a closure body **1470"** that has a round outer surface **1431"** and a rectangular shaped internal passage **1439** extending therethrough. The outer surface **1431"** is located a distance R from the geometric center point or center axis C. When measured along a vertical reference axis VR that extends through the center point or center axis C as shown, the upper wall thickness UWT is equal to the lower wall thickness LWT. When

measure along a horizontal reference axis HR that extends through the center point or center axis C and which is perpendicular to the vertical reference axis VR, the thicknesses SWT of the sidewall portions **1437"** are greater than the upper wall and lower wall thicknesses UWT and LWT. Thus, SWT is greater than UWT and LWT. Stated another way, the portion of the distal closure tube segment **1430"** located above the horizontal reference line HR is a mirror image of the portion of the distal closure tube segment **1430"** located below the horizontal reference line HR. In this example, the side portions **1437"** are thicker than the upper and lower wall portions and may tend to prevent or minimize the tendency of the distal closure tube segment to elongate in the vertical directions. The internal camming surface may be formed on the distal end of the upper wall portion **1440"**.

[0415] In the illustrated arrangement, the anvil **1130** is moved between open and closed positions by distally advancing the distal closure tube segment **1430**. As can be seen in FIG. **41**, when the anvil **1130** is in the fully open position, the distal ends **1163** of the anvil attachment flanges **1151** may extend above the deck surface **1116** of the staple cartridge **1110**. When the closure process is commenced by distally advancing the distal closure tube segment in the distal direction DD, the distal ends **1163** of the anvil attachment flanges **1151** extend past the deck surface **1116** of the staple cartridge **1110** to thereby prevent infiltration of tissue therebetween which might hamper the closure process. See FIG. **40**. Once the anvil **1130** has been moved to the fully closed position by the distal closure tube segment **1430**, the distal ends **1461** of the lateral mounting bodies on the distal closure tube segment **1430** further act as tissue stops to prevent tissue from infiltrating therebetween. See FIG. **41**.

[0416] FIG. **47** depicts portion of a surgical end effector **110'** that may be similar to the surgical end effector **110** of the interchangeable surgical tool assembly **100** of FIGS. **1** and **2**. In the example illustrated in FIG. **47**, the anvil **114** includes an elongate body portion **190** and an anvil mounting portion **192**. The anvil mounting portion **192** comprises two spaced anvil mounting flanges **194** that protrude proximally from the elongate body portion **190**. Each anvil mounting flange **194** has an outwardly extending trunnion **196** thereon. The trunnions **196** are each movably received within a corresponding kidney slot or elongated arcuate trunnion slot **197** that is provided in the elongate channel **112**. When the anvil **114** is in a "fully opened" position, the trunnions **196** are generally located in the bottom portions **198** of the elongated arcuate trunnion slots **197**. The anvil **114** can be moved to a closed position by distally advancing the distal closure tube segment **142** in the distal direction DD so that the end **148** of the distal closure tube segment **142** rides up a cam surface **193** that is formed on the anvil mounting portion **192** of the anvil **114**. As the distal end **148** of the distal closure tube segment **142** is distally advanced along a cam surface **193** on the anvil mounting portion **192**, the distal closure tube segment **142** causes the body portion **190** of the anvil **114** to pivot and move axially relative to the surgical staple cartridge **116**. When the distal closure tube segment **142** reaches the end of its closure stroke, the distal end **148** of the distal closure tube segment **142** abuts/contacts an abrupt anvil ledge **191** and serves to position the anvil **114** so that the forming pockets (not shown) in the underside of the body portion **190** are properly aligned with the staples in the cartridge. The anvil ledge **191** is defined between the cam surface **193** on the anvil mounting portion **192** and the elongate anvil body portion **190**. Stated another way, in this arrangement, the cam surface **193** does not extend to the outermost surface **195** of the anvil body **190**. After the distal closure tube **142** has reached this fully extended position, any further application of closure motions/forces to the anvil **114**, may cause damage to the anvil and/or the closure system components. As can be seen in FIG. **47**, in this arrangement, the closure force F_H is parallel to the shaft axis SA. The distance between an axis or plane T_A passing through the centers of the trunnions **196** to the closure force vector F_H is represented as distance X_R. This distance X_R times the closure force F_H represents a closure moment C_M that is applied to the anvil **114**.

[0417] FIGS. **48** and **49** illustrate the closure force configurations for an anvil **1130** of a surgical end effector **1100** of the interchangeable tool assembly **1000**. As indicated above, the anvil trunnions **1158** are pivotally mounted within holes **1154** in the elongate channel **1102**. Unlike the anvil **114** described above, the anvil **1130** does not move axially. Instead, the anvil **1130** is constrained to only pivot about the anvil axis AA. As the distal closure tube segment **1430** is advanced in the distal direction DD under the horizontal closure force F_{H1}, the interaction between the internal cam surface **1444** on the distal closure tube segment **1430** and the cam surface **1152** on the anvil mounting portion **1150** results in the distal closure tube segment **1430** experiencing a vertical closure force component V_F. The resultant force vector F_N experienced by the cam surface **1152** on the anvil mounting portion **1150** is "normal to" or perpendicular to the internal cam surface **1444**. Angle Θ in FIGS. **48** and **49** represents the angle of the camming surface **1152** as a well as the internal camming surface **1440** to the horizontal. The distance between this resultant force vector F_N and an axis or plane T_A that extends through the centers of the anvil trunnions **1158** is represented as moment arm M_A. This moment arm distance M_A times the resultant force vector F_N represents a closure moment C_{M1} that is applied to the anvil **1130**. Thus, in applications wherein the horizontal closure forces $F_H=F_{H1}$, the actual amount of closure torque applied to anvil **1130** will be greater than the amount of closure torque applied to the anvil **114** because $M_A>X_R$ and therefor the closure moment applied to the anvil **1130** will be greater than the closure moment applied to the anvil **114**. FIG. **49** also illustrates the resistive forces established by the tissue during the closure process. F_T represents the force generated by the tissue when the tissue is clamped between the anvil and the staple cartridge. This "counter" moment M_T that is applied to the anvil **1130** equals the distance X_T between the tissue force T_F and the axis or plane T_A that extends through the centers of the anvil trunnions **1158** times the tissue force T_F. Thus, in order to achieve a desired amount of anvil closure, C_{M1} must be greater than M_T.

[0418] Returning to the example depicted in FIG. **47**, it can be seen that the firing bar **170** is attached to a firing member **174** that, when in a starting or unfired position, is located within the elongate channel **112** and, more particularly, is located completely distal to the distal closure tube segment **142** in a position wherein a top portion **175** of the firing member **174** is in contact with a portion of the anvil **114**. Because the firing member **174** is located in a position wherein the top portion **175** thereof can contact the anvil as the anvil **114** is moved to the closed position, such arrangement may result in the need for higher closure forces to

move the anvil **114** to a completely or fully closed position. In addition, when the firing system is activated, higher firing forces may be required to overcome the frictional interference between the top portion **175** of the firing member **174** and the anvil **114**. Conversely as can be seen in FIG. **48**, in the end effector **1100**, the firing member **1660** is "parked" in the firing member parking area **1154** that is within the distal closure tube segment **1430**. When the firing member **1660** is located within the firing member parking area **1154** within the distal closure tube segment **1430**, it is unable to generate significant frictional forces with the anvil. Thus, one of the advantages that may be achieved by parking the firing member **1660** completely within the distal closure tube segment **1430** may be the reduction of the amount of closure force necessary to close the anvil to a fully closed position and/or a reduction in the amount of firing force needed to advance the firing member from the starting to ending position within the end effector. Stated another way, parking the firing member **1660** so that the firing member **1660** is completely proximal to the distal end of the distal closure tube segment **1430** and the internal cam surface **1444** thereon and in a starting position wherein any frictional contact between the firing member and the anvil is eliminated or reduced, may ultimately require lower closure and firing forces to be generated for operation of the end effector.

[0419] As discussed above, excessive flexure of the anvil during the closure and firing processes can lead to the need for undesirably higher firing forces. Thus, stiffer anvil arrangements are generally desirable. Returning to FIGS. **20** and **21**, another advantage that may be provided by the anvil **1130** and elongate channel **1102** depicted therein is that the anvil mounting portion **1150** of the anvil **1130** is generally more robust and therefor stiffer than other anvil and elongate channel arrangements. FIG. **50** illustrates use of stiffener gussets **199** between the anvil mounting flanges **194** and the elongate anvil body portion **190**. Similar gusset arrangements may also be employed between the anvil attachment flanges **1151** and anvil body **1132** of anvil **1130** to further enhance anvil stiffness.

[0420] As indicated above, the interchangeable surgical tool **1000** includes an elastic spine member **1520**. As can be seen in FIGS. **6**, **7**, **7**A, **8** and **51-54**, the distal end portion **1522** of the elastic spine member **1520** is separated from the proximal end portion **1524** of the elastic spine member **15** by a stretch feature **1530** formed in the elastic spine member **1520**. In addition, a stretch limiting insert **1540** is retainingly supported between the distal end portion **1522** and the proximal end portion **1524**. In various arrangements, the elastic spine member **1520** may be fabricated from, for example, suitable polymeric material, rubber, etc. which has a modulus of elasticity designated as ME_1 for reference purposes. The stretch feature **1530** may include a plurality of stretch cavities **1532**. As can be seen in FIG. **7**A, the illustrated stretch feature **1530** includes four triangular-shaped stretch cavities **1532** that are arranged to define some what flexible wall segments **1534** therebetween. Other shapes and numbers of stretch cavities **1532** may be employed. The stretch cavities **1532** may be molded or machined into the elastic spine member **1520**, for example.

[0421] Still referring to FIGS. **6**, **7** and **51-54**, the stretch limiting insert **1540** comprises a body portion **1541** which has a modulus of elasticity designated as ME_2 for reference purposes. As can be seen in FIG. **6**, the body portion **1541** includes two downwardly extending mounting lugs **1542** that are each configured to be seated into mounting cavities **1535** formed in the elastic spine member **1520**. See also FIG. **7**A. To provide the stretch limiting insert **1540** with a desired amount of stretch capacity and elasticity, the body portion **1541** in the illustrated arrangement is provided with a plurality of upper cavities **1543**. The illustrated example includes four upper cavities **1543** that are relatively square or rectangular in shape and which are spaced to define flexible walls **1544** therebetween. Other embodiments may include other numbers and shapes of upper cavities. The body portion **1541** of the illustrated stretch limiting insert **1540** also includes a centrally disposed, downwardly protruding central lug portion **1545** that is configured to be seated in a central cavity **1536** above the stretch feature **1530**. See FIG. **7**A. In the illustrated example, the central lug portion **1545** includes a pair of central passages **1546** that extend laterally therethrough to define a flexible wall **1547** therebetween.

[0422] Also in the illustrated example, the stretch limiting insert **1540** includes an elongated lateral cavity **1548** that is positioned on each lateral side of the body portion **1541**. Only one lateral cavity **1548** may be seen in FIGS. **6** and **51-54**. Each elongated lateral cavity **1548** is configured to support a corresponding stretch limiter **1550** therein. Thus, in the described example, two stretch limiters **1550** are employed in the stretch limiting insert **1540**. In at least one arrangement, the stretch limiter **1550** includes an elongate body portion **1552** that terminates on each end with a downwardly extending mounting lug **1554**. Each mounting lug **1554** is received in a corresponding lug cavity **1549** formed in the body portion **1541**. The stretch limiter may have a modulus of elasticity for reference purposes of ME_3. In at least one arrangement, $ME_3<ME_2<ME_1$.

[0423] Actuation of the interchangeable surgical tool assembly **1000** when operably attached to the handle assembly **500** will now be described in further detail with reference to FIGS. **51-54**. FIG. **51** illustrates the anvil **1130** in an open position. As can be seen in that Figure, the distal closure tube segment **1430** is in its starting or unactuated position and the positive anvil opening features **1462** have pivoted the anvil **1130** to the open position. In addition, the firing member **1660** is in the unactuated or starting position wherein the upper portion, including the top nose portion **1630**, is parked in the firing member parking area **1154** of the anvil mounting portion **1150**. When the interchangeable tool assembly **1000** is in this unactuated state, the stretch limiting insert **1540** is in an unstretched state. The axial length of the stretch limiting insert **1540** when in the unstretched state is represented by L_{us} in FIG. **51**. L_{us} represents the distance between a reference axis A that corresponds to the proximal end of the body portion **1541** of the stretch limiting insert **1540** and a reference axis B that corresponds to the distal end of the body portion **1541** as shown in FIG. **51**. The axis labeled F corresponds to the location of the distal end of the staple cartridge **1110** that has been properly seated within the elongate channel **1102**. It will be understood that when the tool assembly **1000** is in this unactuated state, the elastic spine member **1520** is in a relaxed unstretched state.

[0424] FIG. **52** illustrates the interchangeable surgical tool assembly **1000** after the closure drive system **510** has been activated as described above to drive the distal closure tube segment **1430** distally in the distal direction DD. As the distal closure tube segment **1430** moves distally, the cam surface **1444** on the distal end **1441** of the upper wall portion

1440 of the distal closure tube segment **1430** cammingly contacts the cam surface **1152** on the anvil mounting portion **1150** and pivots the anvil **1130** to the closed position as shown. The closure drive system **510** moves the distal closure tube segment **1430** through its entire closure stroke distance and then is deactivated and the distal closure tube segment is axially locked or otherwise retained in that position by the closure drive system **510**. As the distal closure tube segment **1430** contacts the anvil mounting portion **1150**, the closure forces generated by the distal advancement of the distal closure tube segment **1430** on the anvil **1130** will also axially advance the anvil **1130** and the elongate channel **1102** in the distal direction DD. The stretch feature **1530** in the elastic spine **1520** will begin to stretch to accommodate this distal advancement of the elongate channel **1102** and anvil **1130**. Axis B as shown in FIG. **52** is a reference axis for the stretch limiting insert **1540** when in a relaxed or unstretched state. Axis C corresponds to the end of the stretch limiting insert **1540** after the stretch limiting insert has been stretched into its maximum elongated stated. The distance L_s represents the maximum amount or length that the stretch limiting insert **1540** may elongate. Axis G corresponds to the location of the distal end of the surgical staple cartridge **1110** after the anvil **1130** has been moved to that "first" closed position. The distance L_T between reference axes F and G represents the axial distance that the elongate channel **1102** and the anvil **1130** have traveled during actuation of the closure drive system **510**. This distance L_T may be equal to the distance L_s that the stretch limiting insert **1540** was stretched during the closure process as limited by the stretch limiter **1550**.

[0425] Returning to FIG. **51**, it can be noted that there is a space S between each mounting lug **1554** of the stretch limiter **1550** and the inner walls **1551** of each of the lug cavities **1549** prior to commencement of the closure process. As can be seen in FIG. **52** the spaces S are gone. That is, each of the mounting lugs **1554** abuts its corresponding cavity wall **1549** in the stretch limiting insert **1540**. Thus the stretch limiter **1550** serves to limit the amount of elongation experienced by the stretch limiting insert **1540** which in turn limits the amount of distal travel of the elongate channel **1102** and anvil **1130** relative to the proximal end portion **1524** of the elastic spine **1520**. The distal closure tube **1430** is axially locked in position by the closure drive system **510**. When in that position, the anvil **1130** is retained in a 'first" closed position relative to the surgical staple cartridge **1110**. Because the firing drive system **530** has yet to be actuated, the firing member **1660** has not moved and remains parked in the firing member parking area **1154**. The position of the underside of the anvil **1130** when in the "first" closed position is represented by axis K in FIGS. **52** and **53**.

[0426] FIG. **53** illustrates the position of the firing member **1660** after the firing drive system **530** has been initially actuated. As can be seen in that Figure, the firing member **1660** has been distally advanced out of the firing member parking area **1154**. The top portion of the firing member **1660** and, more specifically, each of the top anvil engagement features **1672** has entered the proximal ramp portion **1138** of the corresponding axial passage **1146** in the anvil **1130**. At this point in the process, the anvil **1130** may be under considerable bending stress caused by the tissue that is clamped between the underside of the anvil **1130** and the deck of the staple cartridge **1110**. This bending stress, as well as the frictional resistance between the various portions of the firing member and the anvil **1130** and elongate channel **1102**, serve to essentially retain the elongate channel **1102** and the distal closure tube segment in a static condition while the firing member **1660** is initially distally advanced. During this time period, the amount of force required to fire the firing member **1660** or, stated another way, the amount of force required to distally push the firing member **1660** through the tissue that is clamped between the anvil **1130** and the cartridge **1110** is increasing. See line **1480** in FIG. **55**. Also during this time period, the stretch limiting insert is trying to retract the elongate channel **1102** and anvil **1130** in the proximal direction PD into the distal closure tube segment **1430**. Once the amount of friction between the firing member **1660** and the anvil **1130** and elongate channel **1102** is less than the retraction force generated by the stretch limiting insert **1540**, the stretch limiting insert **1540** will cause the elongate channel **1102** and anvil **1130** to be drawn proximally further into the distal closure tube segment **1430**. The position of the distal end **1113** of the staple cartridge **1110** after the elongate channel **1102** and anvil **1130** have traveled in the proximal direction PD is represented as position H in FIG. **54**. The axial distance that the elongate channel **1102** and the anvil **1130** traveled in the proximal direction PD is represented as distance I in FIG. **54**. This proximal movement of the anvil **1130** and the elongate channel **1102** into the distal closure tube segment **1430** will result in the application of additional closure forces to the anvil **1130** by the distal closure tube segment **1430**. Line M in FIG. **54** represents the "second" closed position of the anvil **1130**. The distance between position K and position M which is represented as distance N comprises the vertical distance that the distal end **1133** of the anvil body **1132** traveled between the first closed position and the second closed position.

[0427] The application of additional closure forces to the anvil **1130** by the distal closure tube segment **1430** when the anvil **1130** is in the second closed position, resists the amount of flexure forces applied to the anvil **1130** by the tissue that is clamped between the anvil **1130** and the cartridge **1110**. Such condition may lead to better alignment between the passages in the anvil body **1130** and the firing member **1660** which may ultimately reduce the amount of frictional resistance that the firing member **1660** experiences as it continues to advance distally through the end effector **1100**. Thus, the amount of firing force required to advance the firing member through the balance of its firing stroke to the ending position may be reduced. This reduction of the firing force can be seen in the chart in FIG. **55**. The chart depicted in FIG. **55** compares the firing force (Energy) required to fire the firing member from the beginning to the end of the firing process. Line **1480** represents the amount of firing force required to move the firing member **1660** from its starting to ending position when the end effector **1100** is clamping tissue therein. Line **1482**, for example, represents the amount of firing force required to move the firing member the interchangeable surgical tool assembly **1000** described above. Line **1482** represents the firing force required to move the firing member **174** from its starting to ending position through tissue that is clamped in the end effector **110** or **110'**. As can be seen from that chart, the firing forces required by both of the surgical tool assemblies **100**, **1000** are substantially the same or very similar until the point in time **1484** wherein the elastic spine assembly **1510** of the interchangeable tool assembly **1000** results in an

application of a second amount of closure force to the anvil. As can be seen in the chart of FIG. **55**, when the second amount of closure force is experienced by the anvil **1130** (point **1484**), the amount of closure force required to complete the firing process is less than the amount of closure force required to complete the closing process in tool assembly **100**.

[0428] FIG. **56** compares the amount of firing load required to move a firing member of various surgical end effectors from a starting position (**0.0**) to an ending position (**1.0**). The vertical axis represents the amount of firing load and the horizontal axis represents the percentage distance that the firing member traveled between the starting position (**0.0**) and the ending position (**1.0**). Line **1490** depicts the firing force required to fire, for example, the firing member of a surgical tool assembly **100** or similar tool assembly. Line **1492** depicts the firing force required to fire the firing member of a surgical tool assembly that employs the various firing member improvements and configurations that may be disclosed in, for example, U.S. patent application Ser. No. 15/385,917, entitled STAPLE CARTRIDGE COMPRISING STAPLES WITH DIFFERENT CLAMPING BREADTHS, and the other above-mentioned U.S. patent applications that were filed on even date herewith and which have been incorporated by reference herein in their respective entirety. Line **1494** depicts the firing force required to fire the firing member from its starting to ending position of surgical tool assemblies that employ at least some of the features and arrangements disclosed herein for stiffening the anvil. Line **1496** depicts the firing force required to fire, for example, surgical tool assemblies that employ the elastic spine arrangement and at least some of the features and arrangements disclosed herein for stiffening the anvil. As can be seen in that Figure, the surgical tool assembly that employs the elastic spine arrangement and at least some of the anvil stiffening arrangements disclosed herein have a much lower force-to-fire requirement.

[0429] Traditionally, surgical stapling and cutting instruments comprised robust mechanical lockouts configured to protect against unauthorized firing of the surgical stapling and cutting instruments because of the dangers associated with such unauthorized firing. For example, firing a surgical stapling and cutting instrument that is not loaded with a staple cartridge, or is loaded with a staple cartridge that has already been fired, may cause severe bleeding if the tissue cutting is performed without any tissue stapling.

[0430] The recent transition to motorized surgical stapling and cutting instruments presents new challenges in ensuring the safe operation of such instruments. Among other things, the present disclosure presents various electrical and electromechanical lockouts that are suitable for use with motorized surgical stapling and cutting instruments. Since lockout failure can result in a serious risk to the patient, the present disclosure presents multiple safeguards that operate in redundancy to ensure that lockout failures are avoided. The present disclosure provides various techniques for detecting when a staple cartridge is attached to an end effector of a surgical stapling and cutting instrument. The present disclosure further provides various techniques for detecting whether an attached staple cartridge is spent.

[0431] An end effector **4000** of a surgical stapling system is illustrated in FIG. **57**. The end effector **4000** comprises a frame **4002**, a cartridge jaw **4004**, and an anvil **4006**. The cartridge jaw **4004** extends fixedly from the frame **4002**. The anvil **4006** is movable between an open, or unclamped, position and a closed, or clamped, position (FIG. **57**) relative to the cartridge jaw **4004**. In alternative embodiments, the cartridge jaw **4004** is movable between an open, or unclamped, position and a closed, or clamped, position relative to the anvil **4006**. In at least one such embodiment, the anvil **4006** extends fixedly from the frame **4002**.

[0432] The cartridge jaw **4004** includes a channel or carrier **4022** configured to receive a staple cartridge, such as a staple cartridge **4008**, for example. Referring to FIG. **58**, the staple cartridge **4008** comprises a cartridge body **4010**. The cartridge body **4010** comprises a deck **4012** configured to support the tissue of a patient, a longitudinal slot **4014**, and six longitudinal rows of staple cavities **4016** defined therein. Each staple cavity **4016** is configured to receive and removably store a staple therein. The staple cartridge **4008** further comprises staple drivers configured to drive the staples out of the staple cavities **4016**. Other staple cartridges with various other arrangements of staple cavities, decks, and/or staples are envisioned for use with the end effector **4000**.

[0433] Further to the above, the staple cartridge **4008** further comprises a sled **4018** configured to engage the staple drivers. More specifically, the sled **4018** comprises ramps **4020** configured to engage cams defined on the staple drivers and lift the staple drivers and the staples within the staple cavities **4016** as the sled **4018** is moved distally through the staple cartridge **4008**. A firing member is configured to motivate the sled **4018** distally from a proximal, unfired, or starting position toward a distal, fired, or end position during a staple firing stroke.

[0434] Referring to FIGS. **58**, **59**, **60**B, the staple cartridge **4008** includes a cartridge circuit **4024**. The cartridge circuit **4024** includes a storage medium **4026**, a cartridge connector-region **4017** comprising a plurality of external electrical contacts **4028**, and a cartridge-status circuit portion **4032** that includes a trace element **4034**. The storage medium **4026** can be a memory that stores information about the staple cartridge **4008** such as, for example, various characteristics of the staple cartridge **4008** including a firing status, staple-type, staple-size, cartridge batch number, and/or cartridge color.

[0435] Referring to FIGS. **61-62**, the sled **4018** further includes a circuit breaker **4019** comprising a gripping member **4021** that is configured to capture and sever the trace element **4034** from the cartridge-status circuit portion **4032** as the sled **4018** is advanced distally from a starting position. By severing the trace element **4034**, the circuit breaker **4019** transitions the cartridge-status circuit portion **4032** from a closed configuration to an open configuration which signals a transition of the staple cartridge **4000** from an unfired, or unspent, status to a fired, or spent, status. Information about this transition can be stored in the storage medium **4026**. Accordingly, sensing that a staple cartridge **4008** has a severed trace element **4034** can indicate that the staple cartridge **4008** has already been fired.

[0436] As illustrated in FIGS. **61-62**, the gripping member **4021** of the circuit breaker **4019** has a right-angle configuration with a first portion **4023** protruding or extending away from a bottom surface **4025** of the sled **4018** and a second portion **4027** defining a right angle with the first portion **4023**. The second portion **4027** is spaced apart from the bottom surface **4025** a sufficient distance to snuggly hold a severed trace element **4034**, as illustrated in FIG. **62**. This

arrangements ensures that the severed trace element **4034** is not accidently lost in a patient's body after completion of the firing steps of an end effector **4000**. In at least one instance, the circuit breaker **4019** may comprise a magnetic member configured to magnetically retain a severed trace element **4034**, for example. In various instances, a trace element can be cut or displaced to sever or establish an electrical connection indicative of whether a staple cartridge has been fired without completely severing the trace element.

[0437] In at least one instance, a carrier **4022** may include a Hall effect sensor **4029** (FIG. **62**A) configured to detect the presence of a magnet embedded into or attached to a sled **4018**. While the sled **4018** is at a start, proximal, or unfired position, the Hall effect sensor **4029** is able to detect the presence of the magnet. But, once the sled **4018** is advanced distally toward an end, distal, or fired position, the Hall effect sensor **4029** no longer senses the presence of the magnet. In at least one instance, a controller **4050** can be configured to receive input from the Hall effect sensor **4029** to assess the position of the sled **4018** and, accordingly, determine whether an attached staple cartridge **4008** is spent based on the readings of the Hall effect sensor **4029**. In certain instances, the Hall effect sensor **4029** can be attached to the sled **4018** while the corresponding magnet is attached to and/or embedded into the carrier **4022**. In certain instances, other position sensors can be employed to determine whether the sled **4018** is at the start, proximal, or unfired position.

[0438] In certain instances, a Hall effect sensor and magnet combination can be employed to determine whether a staple cartridge is spent by detecting whether a staple driver is at a start or unfired position. As described above, during a firing stroke, a sled **4018** is transitioned from a start, proximal, or unfired position toward an end, distal, or fired position to motivate a plurality of staple drivers to deploy staples of a staple cartridge. Each staple driver is generally lifted from a start or unfired position toward an final or fired position to deploy one or more staples. The Hall effect sensor can be coupled to the carrier **4022** or the staple cartridge **4008**. The corresponding magnet can be coupled to a staple driver such as, for example, a proximal staple driver of the staple cartridge **4008**. In at least one instance, the corresponding magnet is coupled to a proximal-most staple driver of the staple cartridge **4008**. In certain instances, the Hall effect sensor is coupled to the carrier **4022** or the staple cartridge **4008** while the magnet is coupled to the staple driver. In certain instances, the Hall effect sensor is coupled to the carrier **4022** or the staple cartridge **4008** while the magnet is coupled to the proximal-most staple driver.

[0439] The Hall effect sensor is configured to detect the presence of the magnet while the staple driver is in the start or unfired position. But once the sled **4018** motivates the staple driver to be lifted from the start or unfired position, the Hall effect sensor no longer senses the presence of the magnet. Alternatively, the Hall effect sensor and magnet arrangement can be configured to detect when the staple driver reaches the final or fired position, for example. The Hall effect sensor and magnet arrangement can be configured to detect when the distal-most staple driver reaches the final or fired position, for example. In any event, a controller **4050** can be configured to receive input from the Hall effect sensor to assess the position of the staple driver and, accordingly, determine whether an attached staple cartridge **4008** is spent based on the readings of the Hall effect sensor **4029**. In certain instances, other position sensors can be employed to determine whether the staple driver is at the start or unfired position.

[0440] As illustrated in FIG. **62**A, the controller **4050** may comprise a processor **4052** and/or one or more storage mediums such as, for example, a memory **4054**. By executing instruction code stored in the memory **4054**, the processor **4052** may control various components of the surgical stapling and cutting instrument such as a firing system **4056** and a user interface **4058** such as, for example, a display. The memory **4054** includes program instructions which, when executed by the processor **4052**, cause the processor **4052** to determine whether an attached staple cartridge **4008** is spent based on input from one or more sensors such as, for example, the Hall effect sensor **4029**.

[0441] The user interface **4058** may include one or more visual feedback elements including display screens, backlights, and/or LEDs, for example. In certain instances, the user interface **4058** may comprise one or more audio feedback systems such as speakers and/or buzzers, for example. In certain instances, the user interface **4058** may comprise one or more haptic feedback systems, for example. In certain instances, the user interface **4058** may comprise combinations of visual, audio, and/or haptic feedback systems, for example.

[0442] In at least one instance, the carrier **4022** includes one or more electrical contacts configured to be electrically connected to corresponding electrical contacts in a sled **4018** of a staple cartridge **4008** seated in the carrier **4022**. The electrical contacts define an electrical circuit **4031** (FIG. **62**B) that remains closed while the sled **4018** is in a proximal unfired position. The electrical circuit **4031** is transitioned into an open configuration when the sled **4018** is advanced toward an end, distal, or fired position due to the severance of the electrical connection between the electrical contacts of the carrier **4022** and the sled **4018**.

[0443] The electrical circuit **4031** may further include one or more sensors such as, for example, voltage or current sensors configured to detect whether the electrical circuit **4031** is in a closed configuration or an open configuration. Input from the one or more sensors can be received by a controller **4050**. The controller **4050** can determine whether an attached staple cartridge **4008** is spent based on the input from the one or more sensors. The memory **4054** may include program instructions which, when executed by the processor **4052**, cause the processor **4052** to determine whether an attached staple cartridge **4008** is spent based on input from the one or more sensors.

[0444] In certain instances, a staple cartridge **4008** may include an ETS lockout with a continuity path along a path of a sled defined by sled guide rails, for example. When the sled is in a proximal-most position, the sled is configured to interrupt the electrical path. However, when the sled is advanced distally the electrical path is completed and is sensed by an inductance sensor in the carrier **4022**, for example. In various instances, one or more inductance sensors can be configured to track one or more proximal forming pockets for identification of the finger print of staples received within the proximal pockets. The inductance sensors can be configured to detect the absence of the staples from their respective forming pockets. Examples of ETS lockouts are described in U.S. Patent Application Publication No. 2013/0248577, entitled SURGICAL STAPLING DEVICE WITH LOCKOUT SYSTEM FOR PRE-

VENTING ACTUATION IN THE ABSENCE OF AN INSTALLED STAPLE CARTRIDGE, filed Mar. 26, 2012, now U.S. Pat. No. 9,078,653, the entire disclosure of which is incorporated by reference herein.

[0445] In at least one instance, a staple cartridge, similar to the staple cartridge **4008**, includes at least one electrical circuit **4033** (FIG. **62**C) that comprises two electrical contacts that are spaced apart from one another. The electrical contacts are configured to be bridged by a staple of the staple cartridge when the staple is in an unfired position. Accordingly, the electrical circuit **4033** is in a closed configuration when the staple is in the unfired position. In addition, the electrical circuit **4033** is in an open configuration when the staple is lifted by a staple driver for deployment into tissue. The lifting of the staple by a staple driver during a firing stroke separates the staple from the electrical contacts of the electrical circuit **4033** thereby transitioning the electrical circuit **4033** into an open configuration.

[0446] The electrical circuit **4033** may further include one or more sensors such as, for example, voltage or current sensors configured to detect whether the electrical circuit **4033** is in a closed configuration or an open configuration. Input from the one or more sensors can be received by a controller **4050**. The controller **4050** can determine whether an attached staple cartridge **4008** is spent based on the input from the one or more sensors. The memory **4054** may include program instructions which, when executed by the processor **4052**, cause the processor **4052** to determine whether an attached staple cartridge **4008** is spent based on input from the one or more sensors.

[0447] In at least one instance, a staple cartridge, similar to the staple cartridge **4008**, includes at least one electrical circuit **4035** (FIG. **62**D) that comprises a conductive bridge that is configured to be ruptured when a staple driver of the staple cartridge is lifted to deploy one or more staples into tissue, which causes the electrical circuit **4035** to be transitioned from a closed configuration to an open configuration. The lifting of the staple driver during a firing stroke causes the conductive bridge of the electrical circuit **4035** to be severed, cut, or displaced thereby transitioning the electrical circuit **4033** into an open configuration. The conductive bridge of the electrical circuit **4035** is placed in a predetermined path of the staple driver. In at least one instance, the conductive bridge extends across, or at least partially across, a staple pocket configured to store the staple in an unfired position.

[0448] The electrical circuit **4035** may further include one or more sensors such as, for example, voltage or current sensors configured to detect whether the electrical circuit **4035** is in a closed configuration or an open configuration. Input from the one or more sensors can be received by a controller **4050**. The controller **4050** can determine whether an attached staple cartridge **4008** is spent based on the input from the one or more sensors. The memory **4054** may include program instructions which, when executed by the processor **4052**, cause the processor **4052** to determine whether an attached staple cartridge **4008** is spent based on input from the one or more sensors.

[0449] In various instances, upon determining that an attached staple cartridge **4008** is spent, a controller **4050** is configured to cause the firing system **4056** to be deactivated and/or provide user feedback as to the reason for the deactivation through a user interface such as, for example, a display **4058**. The controller **4050** may identify and/or aid a user in addressing the cause of the deactivation of the firing system **4056**. For example, the controller **4050** may alert a user that an attached staple cartridge is spent or is not the correct type to be used with the end effector **4000**. Other techniques for determining whether a staple cartridge is spent are included in U.S. patent application Ser. No. 15/131,963, entitled METHOD FOR OPERATING A SURGICAL INSTRUMENT, filed Apr. 18, 2016, which is incorporated herein by reference in its entirety.

[0450] As illustrated in FIG. **60**A, the carrier **4022** includes a carrier circuit **4043** (FIG. **60**C) separably couplable to a cartridge circuit **4024** of a staple cartridge **4008**. The carrier circuit **4043** has a plurality of electrical contacts **4036**. In addition, the carrier circuit **4043** includes a carrier connector-region **4013** comprising a plurality of connectors **4038** that each defines a first electrical contact **4038***a* and a second electrical contact **4038***b*. The connectors **4038** are positioned such that a gap is maintained between the electrical contacts **4036** and the first electrical contacts **4038***a* of the connectors **4038** in their neutral positions. Each of the connectors **4038** comprises a curved portion protruding from a supporting wall **4040**. The second electrical contacts **4038***b* are defined at the curved portions of the connectors **4038**. When the staple cartridge **4008** is inserted in the carrier **4022**, the external electrical contacts **4028** of the staple cartridge **4008** are configured to engage and move the connectors **4038** into a biased configuration where the electrical contacts **4036** are electrically coupled to the corresponding first electrical contacts **4038***a* of the connectors **4038**. While the staple cartridge **4008** is seated in the carrier **4022**, the external electrical contacts **4028** of the staple cartridge **4008** are also electrically coupled to the corresponding second electrical contacts **4038***b* of the connectors **4038**.

[0451] To ensure a robust electrical connection, one or more of the electrical connectors **4038**, external electrical contacts **4028**, the electrical contacts **4036**, the electrical contacts **4038***a*, and/or the electrical contacts **4038***b* can be coated, or at least partially coated, with a fluid-repellant coating, and/or potted in an insulating material such as silicon to prevent fluid ingress. As illustrated in FIG. **60**A, a fluid-repellant coating is added to the electrical connectors **4038** and the electrical contacts **4036**. In at least one aspect, the fluid-repellant coating is added to all the electrical cables and/or connections of a staple cartridge. One or more fluid-repellant coatings manufactured by Aculon, Inc., for example, can be used.

[0452] Further to the above, the electrical contacts **4038***b* of the spring-biased electrical connectors **4038** include wearing features, or point contacts, **4039** in the form of a raised dome-shaped structure configured to remove or scratch off the fluid-repellant coating from the external electrical contacts **4028** of the staple cartridge **4008** thus establishing an electrical connection with the staple cartridge **4008**. A compressible seal **4041** is configured to prevent, or at least resist, fluid ingress between a carrier **4022** and a staple cartridge **4008** seated in the carrier **4022**. The compressible seal **4041** can be comprised of a compressible material that snuggly fits between a carrier **4022** and a staple cartridge **4008** seated in the carrier **4022**. As illustrated in FIG. **60**A, the compressible seal **4041** defines walls that define a perimeter around, or at least partially around, the electrical connectors **4038** and the external

electrical contacts **4028** of the staple cartridge **4008** when the staple cartridge **4008** is seated in the carrier **4022**.

[0453] Referring primarily to FIGS. **58-60**, the carrier connector-region **4013** and the cartridge connector-region **4017** are configured to facilitate an electrical connection between the cartridge circuit **4024** and the carrier circuit **4043** when the staple cartridge **4008** is seated within the carrier **4022**. As illustrated in FIG. **60**, the carrier connector-region **4013** is located on a side wall **4009** of the carrier **4022**. The carrier connector-region **4013** is secured to an inner surface **4011** of the side wall **4009**. As illustrated in FIG. **59**, the cartridge connector-region **4017** is located on a side wall **4007** of the staple cartridge **4008**. The cartridge connector-region **4017** is secured to an outer surface **4005** of the side wall **4007**. The carrier connector-region **4013** is configured to abut against the cartridge connector-region **4017** when the staple cartridge **4008** is seated in the carrier **4022**. The compressible seal **4041** prevents, or at least resists, fluid ingress between the carrier connector-region **4013** and the cartridge connector-region **4017**. Positioning the carrier connector-region **4013** and the cartridge connector-region **4017** on the corresponding side walls **4009** and **4007** facilitates the establishment of an electrical connection between the staple cartridge **4008** and the end effector **4000** by seating the staple cartridge **4008** within the carrier **4022**. Positioning the carrier connector-region **4013** and the cartridge connector-region **4017** on the corresponding side walls **4009** and **4007** permits establishing a connection between the carrier connector-region **4013** and the cartridge connector-region **4017** simply by seating the staple cartridge **4008** in the carrier **4022**.

[0454] As illustrated in FIG. **63**, a first electrical interface **4042** is defined by the electrical contacts **4036** and **4038***a*. The first electrical interface **4042** is configured to be transitioned between an open configuration where the electrical contacts **4036** and **4038***a* are spaced apart and a closed configuration where the electrical contacts **4036** and **4038***a* are electrically coupled. Likewise, a second electrical interface **4044** is defined by the electrical contacts **4038***b* and **4028**. The second electrical interface **4044** is configured to be transitioned between an open configuration where the electrical contacts **4038***b* and **4028** are spaced apart and a closed configuration where the electrical contacts **4038***b* and **4028** are electrically coupled. Furthermore, a third electrical interface **4046** is defined between the end effector **4000** and a handle portion of a surgical stapling and cutting instrument. The third electrical interface **4046** is also configured to be transitioned between an open configuration where the end effector **4000** is not attached to the handle portion and a closed configuration where the end effector **4000** is attached to the handle portion.

[0455] The transition of the electrical interface **4042** from an open configuration to a closed configuration indicates that a staple cartridge has been attached to the carrier **4022**. In addition, the transition of the electrical interface **4044** from an open configuration to a closed configuration indicates that a correct type of staple cartridge has been attached to the carrier **4022**. When the electrical interface **4044** is in the closed configuration, the storage medium **4026** of the staple cartridge **4008** can be accessed to obtain information stored therein about staple cartridge **4008**.

[0456] In certain instances, as illustrated in FIG. **63**, the electrical interfaces **4042**, **4044**, and **4046** and the cartridge-status circuit portion **4032** are electrically connected in a control circuit **4048**. In such instances, a safety mechanism can be incorporated to prevent the firing of the end effector **4000** if at least one of the electrical interface **4042**, the electrical interface **4044**, the electrical interface **4046**, and the cartridge-status circuit portion **4032** is in an open configuration. Said another way, if the control circuit **4048** is in an open configuration, the safety mechanism prevents the firing of the end effector **4000**. In other words, if the end effector **4000** is not correctly attached to the handle portion of the surgical instrument, if no staple cartridge is attached to the carrier **4022**, if an incorrect staple cartridge is attached to the carrier **4022**, and/or if a spent staple cartridge is attached to carrier **4022**, the safety mechanism prevents the firing of the end effector **4000**.

[0457] In certain instances, one or more of the electrical interface **4042**, the electrical interface **4044**, the electrical interface **4046**, and the cartridge-status circuit portion **4032** are connected in parallel with non-severable sections of the control circuit **4048** which helps avoid any single point failure due to a full interruption of the control circuit **4048**. This arrangement ensures a continued electrical connection within the control circuit **4048** in the event one or more of the electrical interface **4042**, the electrical interface **4044**, the electrical interface **4046**, and the cartridge-status circuit portion **4032** is in an open configuration. For example, as illustrated in FIG. **63**, the trace element **4034** of the cartridge-status circuit portion **4032** is in parallel with a first resistive element **4037** and in series with a second resistive element **4037'** to ensure continued operation and avoid a single point failure of the control circuit **4048** in the event the trace element **4034** is severed. One or more sensors, including but not limited to voltage and/or current sensors, can be employed to detect a current configuration and/or a transition between an open or severed configuration and a closed or intact configuration.

[0458] In certain instances, one or more of the electrical interface **4042**, the electrical interface **4044**, the electrical interface **4046**, and the cartridge-status circuit portion **4032** are not connected in series. In such instances, one or more of the electrical interface **4042**, the electrical interface **4044**, the electrical interface **4046**, and/or the cartridge-status circuit portion **4032** are configured to separately provide feedback regarding their dedicated functions.

[0459] Referring to FIGS. **63-65**, one or more of the electrical interface **4042**, the electrical interface **4044**, the electrical interface **4046**, and the cartridge-status circuit portion **4032** can be implemented in the form of a conductive gate **4060** transitionable between an open configuration, as illustrated in FIG. **64**, and a closed configuration, as illustrated in FIG. **65**. In the closed configuration, the conductive gate **4060** enables an electrical connection between two end-points of an electrical circuit such as, for example, the control circuit **4048**. The electrical connection, however, is severed when the conductive gate **4060** is transitioned to the open configuration.

[0460] The conductive gate **4060** can be repeatedly transitioned between a closed configuration and an open configuration. The conductive gate **4060** includes a pivot portion **4062** rotatably attached to a first end-point **4068** of the control circuit **4048**. The conductive gate **4060** is configured to pivot about the first end-point **4068** between the open and closed configurations. The conductive gate **4060** further includes an attachment portion **4066** spaced apart from the pivot portion **4062**. A central bridge portion **4064** extends

between and connects the pivot portion **4062** and the attachment portion **4066**. As illustrated in FIGS. **64** and **65**, the attachment portion **4066** is in the form of a hook or latch configured to releasably capture a second end-point **4069** of the control circuit **4048** to transition the conductive gate **4060** from the open configuration to the closed configuration. In certain instances, the attachment portion **4066** may comprise a magnetic attachment or any other mechanical attachment, for example. In at least one instance, the conductive gate **4060** can be spring-biased in the closed configuration. Alternatively, the conductive gate **4060** can be spring-biased in the open configuration.

[0461] As illustrated in FIG. **65**A, a safety mechanism **4047** of the surgical instrument may include a controller **4050** which may comprise a processor **4052** and/or one or more storage mediums such as, for example, a memory **4054**. By executing instruction code stored in the memory **4054**, the processor **4052** may control various components of the surgical instrument such as a firing system **4056** and a user interface such as, for example, a display **4058**. The controller **4050** keeps track of the statuses of the electrical interface **4042**, the electrical interface **4044**, the electrical interface **4046**, and/or the cartridge-status circuit portion **4032**. As described in greater detail below, the controller **4050** may, depending on the reported statuses of one or more of the electrical interface **4042**, the electrical interface **4044**, the electrical interface **4046**, and/or the cartridge-status circuit portion **4032**, cause the firing system **4056** to be deactivated and/or provide user feedback as to the reason for the deactivation. In certain instances, the controller **4050** may identify and/or aid a user in addressing the cause of the deactivation of the firing system **4056**. For example, the controller **4050** may alert a user that an attached staple cartridge is spent or is not the correct type to be used with the end effector **4000**.

[0462] In various instances, the memory **4054** includes program instructions which, when executed by the processor **4052**, cause the processor **4052** to determine that a staple cartridge **4008** has been attached to the carrier **4022** when a transition of the electrical interface **4042** to a closed configuration is detected by the processor **4052**. In addition, the memory **4054** may include program instructions which, when executed by the processor **4052**, cause the processor **4052** to determine that that attached staple cartridge **4008** has already been spent or fired when a transition of the electrical interface **4042** to a closed configuration is detected by the processor **4052** but the cartridge-status circuit portion **4032** is in the open configuration.

[0463] Further to the above, the memory **4054** may also include program instructions which, when executed by the processor **4052**, cause the processor **4052** to determine that a memory **4026** of an attached staple cartridge **4008** is accessible when a transition of the electrical interface **4044** to a closed configuration is detected by the processor **4052**. In addition, the processor **4052** may be configured to retrieve certain information stored in the memory **4026** of the attached staple cartridge **4008**. In certain instances, detecting a closed configuration of the electrical interface **4042** while not detecting a closed configuration of the electrical interface **4044** indicates that an incorrect staple cartridge is attached to the carrier **4022**.

[0464] Further to the above, the memory **4054** may also include program instructions which, when executed by the processor **4052**, cause the processor **4052** to determine that a successful connection between the end effector **4000** and the handle portion of the surgical instrument has been detected when a transition of the electrical interface **4046** to a closed configuration is detected by the processor **4052**.

[0465] Referring to FIG. **65**B, a block diagram depicts a method **4071** of firing a surgical instrument that includes an end effector such as, for example, the end effector **4000**. In a first step **4073**, a firing trigger **4550** (FIG. **80**) is pressed while a cutting member of the end effector **4000** is positioned proximally to a predetermined no-cartridge-lockout zone. One or more position sensors can be employed to determine the position of the cutting member. The firing trigger can be located on a handle of the surgical instrument and can be pressed by a user, for example, to in initiate a firing stroke of the surgical instrument. Next, a first decision block **4075** is configured to check whether the trace element **4034** (FIG. **61**) is intact, and a second decision block **4077** is configured to check whether the memory **4026** (FIG. **59**) can be read. If the trace element **4034** is not intact or the memory **4026** cannot be read, the firing lockout is engaged, as indicated in step **4079**. Then, once captured tissue is released by unclamping the end effector **4000** at step **4070**, an articulation mode is re-engaged in step **4072**. If, however, the trace element **4034** is intact and the memory **4026** is read, the firing system **4056** is permitted to proceed through the firing stroke, step **4074**. A decision block **4076** is configured to provide a threshold at a pre-determined cutline at which point, the firing system **4056** is reset. Resetting the firing system **4056** can include returning the cutting member to a per-determined default position, as depicted in step **4078**. As illustrated in step **4074***a*, if the firing trigger **4550** is pressed while the cutting member of the end effector **4000** is positioned distal to the predetermined no-cartridge-lockout zone, the firing system **4056** is permitted to proceed with the firing stroke.

[0466] Referring to FIGS. **66-70**, a staple cartridge **4100** is similar in many respects to the staple cartridge **4008**. The staple cartridge **4100** is releasably attached to the end effector **4000**. In addition, the staple cartridge **4100** includes a cartridge-status circuit **4102** for assessing whether the staple cartridge **4100** is attached to an end effector **4000** and/or whether an attached staple cartridge **4100** was previously fired.

[0467] As illustrated in FIG. **66**, the staple cartridge **4100** comprises a conductive gate **4160** at a proximal portion **4103** of the staple cartridge **4100**. The conductive gate **4160** is movable between a first closed configuration (FIG. **68**), a second closed configuration (FIG. **70**), and an open configuration (FIG. **69**). A controller can be configured to assess whether the staple cartridge **4100** is attached to an end effector **4000** and/or whether an attached staple cartridge **4100** was previously fired by determining whether the conductive gate **4160** is at an open configuration, a first closed configuration, or a second closed configuration. In at least one instance, the first closed configuration is a partially closed configuration while the second closed configuration is a fully closed configuration.

[0468] In a closed configuration, the conductive gate **4160** extends across an elongate slot **4114** defined between a first deck portion **4112***a* and a second deck portion **4112***b* of the staple cartridge **4100**. The conductive gate **4160** extends between a first end-point **4168** of the cartridge-status circuit **4102** and a second end-point **4170** of the cartridge-status circuit **4102**. The first end-point **4168** is defined on a first

side wall **4114***a* of the elongate slot **4114** and the second end-point **4170** is defined on a second side wall **4114***b* of the elongate slot **4114**. To connect the first end-point **4168** and the second end-point **4170** in the closed configuration, the conductive gate **4160** bridges the elongate slot **4114**, as illustrated in FIG. **68**.

[0469] As illustrated in FIG. **66**, the conductive gate **4160** includes a pivot portion **4162** rotatably attached to the first end-point **4168** of the cartridge-status circuit **4102**. The conductive gate **4160** is configured to pivot about the first end-point **4168** between the open, first closed, and second closed configurations. The conductive gate **4160** further includes an attachment portion **4166** spaced apart from the pivot portion **4162**. A central bridge portion **4164** extends between and connects the pivot portion **4162** and the attachment portion **4166**. As illustrated in FIG. **66**, the attachment portion **4166** is in the form of a hook or latch configured to be releasably captured by the second end-point **4170**. The attachment portion **4166** includes a "C" shaped ring **4171** configured to receive the second end-point **4170** in the second closed configuration. An opening **4173** of the "C" shaped ring **4171** is slightly smaller than the second end-point **4170**. Accordingly, for the second end-point **4170** to be received within the "C" shaped ring **4171** an external force is needed to pass the second end-point **4170** through the opening **4173** of the "C" shaped ring **4171** and bring the conductive gate **4160** to the second closed configuration, as illustrated in FIG. **68**.

[0470] Although the conductive gate is spring-biased toward a closed configuration, the spring-biasing force is insufficient to bring the conductive gate **4160** to the second closed configuration. Accordingly, in the absence of an external force to motivate the conductive gate **4160** toward an open configuration or a second closed configuration, the conductive gate **4160** will swing, under the effect of the spring-biasing force, to a resting position at the first closed configuration, as illustrated in FIG. **70**. At the first closed configuration, an intermediate region **4175** between the "C" shaped ring **4171** of the attachment portion **4166** and the central bridge portion **4164** is in contact with the second end-point **4170**. However, the second end-point **4170** is not received within the "C" shaped ring **4171**.

[0471] The staple cartridge **4100** further comprises a sled **4118** which is similar in many respects to the sled **4018**. A firing member **4113** is configured to motivate the sled **4118** distally from a proximal, unfired, or start position toward a distal, fired, or end position during a staple firing stroke. In addition, the sled **4118** includes a catch member **4119** configured to engage and transition the conductive gate **4160** from a second closed configuration to an open configuration as the sled **4118** is advanced distally from the proximal, unfired, or start position toward a distal, fired, or end position. Upon losing contact with the catch member **4119**, the conductive gate **4160** is configured to return to the first closed configuration from the open configuration under the influence of the spring-biasing force and in the absence of any external force.

[0472] Referring to FIG. **67**, the catch member **4119** extends proximally from the sled **4118** and includes a proximal-extending portion **4119***a* and an engagement portion **4119***b* protruding from a proximal end of the proximal-extending portion **4119***a*. The engagement portion **4119***b* is arranged such that conductive gate **4160** is captured by the engagement portion **4119***b* as the sled **4118** is advanced from the proximal, unfired, or start position toward the distal, fired, or end position to deploy staples during a firing stroke of the surgical stapling and cutting instrument.

[0473] At least a portion of the catch member **4119** may be constructed from a non-conductive material. In at least one example, the engagement portion **4119***b* is at least partially made from a non-conductive material.

[0474] Other arrangements and configurations of the catch member **4119** are contemplated by the present disclosure. In at least one aspect, the catch member **4119** can be a post extending away from a base **4118***a* of the sled **4118**, for example. In another instances, the catch member **4119** can be in the form of a ramp wherein the conductive gate **4160** is configured to engage a lower portion of the ramp and, as the sled **4118** is advanced distally, the ramp transitions the conductive gate **4160** to an open configuration. Once the conductive gate **4160** reaches the top of the ramp, the spring-biasing force returns the conductive gate **4160** to a first closed position.

[0475] Referring to FIGS. **68-71**, the first closed configuration, the second closed configuration, and the open configuration represent a first resistance-status, a second resistance-status, and an infinite resistance-status, respectively, wherein the first resistance-status is different than the second resistance-status and the infinite resistance-status, and wherein the second resistance-status is different than the first resistance-status and the infinite resistance-status. By sensing which of the three statuses is current and/or by sensing transitions between the statuses, a controller **4050** (FIG. **71**) can determine whether the staple cartridge **4100** is attached to an end effector **4000** and/or whether an attached staple cartridge **4100** was previously fired.

[0476] The conductive gate **4160** can be configured to define a first resistance when the conductive gate **4160** is at the first closed configuration and a second resistance, different than the first resistance, when the conductive gate **4160** is at the second closed configuration. The controller **4050** may comprise a processor **4052** and/or one or more storage mediums such as, for example, a memory **4054**. By executing instruction code stored in the memory **4054**, the processor **4052** may identify a current resistance-status of the conductive gate **4160**. The controller **4050** may, depending on the detected resistance-status, perform one or more function such as, for example, causing the firing system **4056** to become inactivated and/or providing user feedback as to the reason for such deactivation.

[0477] In various instances, the memory **4054** includes program instructions which, when executed by the processor **4052**, cause the processor **4052** to determine that an unspent or unfired staple cartridge **4100** is attached to the carrier **4022** when a second resistance-status is detected by the processor **4052**. In addition, the memory **4054** may include program instructions which, when executed by the processor **4052**, cause the processor **4052** to determine that a spent or previously fired staple cartridge **4100** is attached to the carrier **4022** when a first resistance-status is detected by the processor **4052**. The memory **4054** may include program instructions which, when executed by the processor **4052**, cause the processor **4052** to determine that no staple cartridge is attached to the carrier **4022** when an infinite resistance-status is detected by the processor **4052**.

[0478] The controller **4050** can be configured to make a determination as to whether a staple cartridge **4008** is detected upon activation or powering of the surgical stapling

and cutting instrument by performing a first reading, or a plurality of readings, of the resistance-status. If an infinite resistance-status is detected, the controller **4050** may then instruct a user through the display **4058**, for example, to load or insert a staple cartridge **4008** into the carrier **4022**. If the controller **4050** detects that a staple cartridge **4008** has been attached, the controller **4050** may determine whether the attached staple cartridge has been previously fired by performing a second reading, or a plurality of readings, of the resistance-status. If a first resistance-status is detected, the controller **4050** may instruct the user that the attached staple cartridge **4008** has been previously fired and/or to replace the staple cartridge **4008**.

[0479] The controller **4050** employs a resistance-status detector **4124** to detect a current resistance-status and, in turn, determine whether the conductive gate **4160** is in the open configuration, the first closed configuration, or the second closed configuration. In at least one aspect, the resistance-status detector **4124** may comprise a current sensor. For example, the controller **4050** may cause a predetermined voltage potential to be generated between the first end-point **4168** and the second end-point **4170**, and then measure the current passing through the conductive gate **4160**. If the measured current corresponds to the first resistance, the controller **4050** determines that the conductive gate **4160** is at the first closed configuration. On the other hand, if the measured current corresponds to the second resistance, the controller determines that the conductive gate **4160** is at the second closed configuration. Finally, if no current is detected, the controller **4050** determines that the conductive gate **4160** is at the open configuration. In at least one aspect, the resistance-status detector **4124** may comprise other sensors such as, for example, a voltage sensor.

[0480] In various instances, one or more controllers of the present disclosure such as, for example, the controller **4050** may be implemented using integrated and/or discrete hardware elements, software elements, and/or a combination of both. Examples of integrated hardware elements may include processors, microprocessors, controllers, integrated circuits, application specific integrated circuits (ASIC), programmable logic devices (PLD), digital signal processors (DSP), field programmable gate arrays (FPGA), logic gates, registers, semiconductor devices, chips, microchips, chip sets, microcontroller, system-on-chip (SoC), and/or system-in-package (SIP). Examples of discrete hardware elements may include circuits and/or circuit elements (e.g., logic gates, field effect transistors, bipolar transistors, resistors, capacitors, inductors, relay and so forth). In other embodiments, one or more controllers of the present disclosure may include a hybrid circuit comprising discrete and integrated circuit elements or components on one or more substrates, for example.

[0481] In one embodiment, as illustrated in FIG. **72**, a circuit **4080** may comprise a controller comprising one or more processors **4082** (e.g., microprocessor, microcontroller) coupled to at least one memory circuit **4084**. The at least one memory circuit **4084** stores machine executable instructions that when executed by the processor **4082**, cause the processor **4082** to execute machine instructions to implement one or more of the functions performed by one or more controllers of the present disclosure such as, for example, the controller **4050**.

[0482] The processor **4082** may be any one of a number of single or multi-core processors known in the art. The memory circuit **4084** may comprise volatile and non-volatile storage media. In one embodiment, as illustrated in FIG. **72**, the processor **4082** may include an instruction processing unit **4086** and an arithmetic unit **4088**. The instruction processing unit may be configured to receive instructions from the one memory circuit **4084**.

[0483] In one embodiment, a circuit **4090** may comprise a finite state machine comprising a combinational logic circuit **4092**, as illustrated in FIG. **73**, configured to implement one or more of the functions performed by one or more controllers of the present disclosure such as, for example, the controller **4050**. In one embodiment, a circuit **4200** may comprise a finite state machine comprising a sequential logic circuit, as illustrated in FIG. **74**. The sequential logic circuit **4200** may comprise the combinational logic circuit **4202** and at least one memory circuit **4204**, for example. The at least one memory circuit **4204** can store a current state of the finite state machine, as illustrated in FIG. **74**. The sequential logic circuit **4200** or the combinational logic circuit **4202** can be configured to implement one or more of the functions performed by one or more controllers of the present disclosure such as, for example, the controller **4050**. In certain instances, the sequential logic circuit **4200** may be synchronous or asynchronous.

[0484] In other embodiments, the circuit may comprise a combination of the processor **4082** and the finite state machine to implement one or more of the functions performed by one or more controllers of the present disclosure such as, for example, the controller **4050**. In other embodiments, the finite state machine may comprise a combination of the combinational logic circuit **4090** and the sequential logic circuit **4200**.

[0485] In some cases, various embodiments may be implemented as an article of manufacture. The article of manufacture may include a computer readable storage medium arranged to store logic, instructions and/or data for performing various operations of one or more embodiments. In various embodiments, for example, the article of manufacture may comprise a magnetic disk, optical disk, flash memory or firmware containing computer program instructions suitable for execution by a general purpose processor or application specific processor. The embodiments, however, are not limited in this context.

[0486] The functions of the various functional elements, logical blocks, modules, and circuits elements described in connection with the embodiments disclosed herein may be implemented in the general context of computer executable instructions, such as software, control modules, logic, and/or logic modules executed by the processing unit. Generally, software, control modules, logic, and/or logic modules comprise any software element arranged to perform particular operations. Software, control modules, logic, and/or logic modules can comprise routines, programs, objects, components, data structures and the like that perform particular tasks or implement particular abstract data types. An implementation of the software, control modules, logic, and/or logic modules and techniques may be stored on and/or transmitted across some form of computer-readable media. In this regard, computer-readable media can be any available medium or media useable to store information and accessible by a computing device. Some embodiments also may be practiced in distributed computing environments where operations are performed by one or more remote processing devices that are linked through a communications network.

In a distributed computing environment, software, control modules, logic, and/or logic modules may be located in both local and remote computer storage media including memory storage devices.

[0487] Additionally, it is to be appreciated that the embodiments described herein illustrate example implementations, and that the functional elements, logical blocks, modules, and circuits elements may be implemented in various other ways which are consistent with the described embodiments. Furthermore, the operations performed by such functional elements, logical blocks, modules, and circuits elements may be combined and/or separated for a given implementation and may be performed by a greater number or fewer number of components or modules. As will be apparent to those of skill in the art upon reading the present disclosure, each of the individual embodiments described and illustrated herein has discrete components and features which may be readily separated from or combined with the features of any of the other several aspects without departing from the scope of the present disclosure. Any recited method can be carried out in the order of events recited or in any other order which is logically possible

[0488] The foregoing detailed description has set forth various embodiments of the devices and/or processes via the use of block diagrams, flowcharts, and/or examples. Insofar as such block diagrams, flowcharts, and/or examples contain one or more functions and/or operations, it will be understood by those within the art that each function and/or operation within such block diagrams, flowcharts, or examples can be implemented, individually and/or collectively, by a wide range of hardware, software, firmware, or virtually any combination thereof. In one embodiment, several portions of the subject matter described herein may be implemented via Application Specific Integrated Circuits (ASICs), Field Programmable Gate Arrays (FPGAs), digital signal processors (DSPs), or other integrated formats. Those skilled in the art will recognize, however, that some aspects of the embodiments disclosed herein, in whole or in part, can be equivalently implemented in integrated circuits, as one or more computer programs running on one or more computers (e.g., as one or more programs running on one or more computer systems), as one or more programs running on one or more processors (e.g., as one or more programs running on one or more microprocessors), as firmware, or as virtually any combination thereof, and that designing the circuitry and/or writing the code for the software and or firmware would be well within the skill of one of skill in the art in light of this disclosure. In addition, those skilled in the art will appreciate that the mechanisms of the subject matter described herein are capable of being distributed as a program product in a variety of forms, and that an illustrative embodiment of the subject matter described herein applies regardless of the particular type of signal bearing medium used to actually carry out the distribution. Examples of a signal bearing medium include, but are not limited to, the following: a recordable type medium such as a floppy disk, a hard disk drive, a Compact Disc (CD), a Digital Video Disk (DVD), a digital tape, a computer memory, etc.; and a transmission type medium such as a digital and/or an analog communication medium (e.g., a fiber optic cable, a waveguide, a wired communications link, a wireless communication link (e.g., transmitter, receiver, transmission logic, reception logic, etc.), etc.).

[0489] Various mechanisms are described herein for detecting attachment of a staple cartridge to a surgical stapling and cutting instrument. In addition, various mechanisms are described herein for determining whether an attached staple cartridge is spent. Since firing a surgical stapling and cutting instrument in the absence of an unspent and properly attached staple cartridge presents a significant danger to the patient, an electromagnetic lockout mechanism **4300** is employed in connection with a firing system such as, for example, the firing system **4056** to prevent firing the surgical stapling and cutting instrument if a staple cartridge is not attached to a carrier **4022** of the surgical stapling and cutting instrument, or if an attached staple cartridge is spent.

[0490] Referring to FIGS. **75-78**, a lockout mechanism **4300** for a surgical stapling and cutting instrument interacts with a drive train **4302** of the firing system **4056**. The lockout mechanism **4300** comprises an electro-mechanical lockout that includes a latch **4304** transitionable between a locked configuration with a drive train **4302** and an unlocked configuration with the drive train **4302**. In the unlocked configuration, as illustrated in FIG. **77**, the drive train **4302** is permitted to advance to deploy staples into tissue and/or cut the tissue. In the locked configuration, illustrated in FIG. **76**, the drive train **4302** is prevented from being advanced either because no staple cartridge is attached to the carrier **4022** or an attached staple cartridge is spent.

[0491] As illustrated in FIG. **75**, the drive train **4302** includes a hole **4306** configured to receive the latch **4304** when the latch **4304** is in the locked configuration. An electrical circuit **4308** is configured to selectively transition the latch **4304** between the locked configuration and the unlocked configuration. The electrical circuit **4308** includes an electrical magnet **4310** which is configured to selectively transition the lockout mechanism **4300** between the locked configuration and the unlocked configuration. The electrical circuit **4308** further includes a power source **4312** and a power relay **4314** configured to selectively transmit energy to power the electrical magnet **4310**. Powering the electrical magnet **4310** causes the lockout mechanism **4300** to be transitioned from a locked configuration to an unlocked configuration. In an alternative embodiment, powering the electrical magnet **4310** can cause the lockout mechanism **4300** to be transitioned from an unlocked configuration to a locked configuration.

[0492] The electrical magnet **4310** is configured to selectively move the latch **4304** between a first position, where the latch **4304** is at least partially positioned in the hole **4306**, and a second position, where the latch **4304** is outside the hole **4306**. In other words, the electrical magnet **4310** is configured to selectively move the latch **4304** between a first position, where the latch **4304** interferes with advancement of the drive train **4302**, and a second position, where the latch **4304** permits advancement of the drive train **4302**. In an alternative embodiment, a drive train of the firing system **4056** comprises a protrusion or a latch configured to be received in a hole of a corresponding structure that is operably attached to the electrical magnet **4310**. In such an embodiment, the electrical magnet **4310** is configured to selectively move the structure comprising the hole between the first position and the second position. Although a latch and a corresponding structure that includes a hole are described in connection with the lockout mechanism **4300**, it is understood that other mechanical mating members can be employed.

[0493] As illustrated in FIG. **75**, the lockout mechanism **4300** further includes a piston **4315** comprising a biasing member such as, for example, a spring **4316** movable between an first compressed configuration, as illustrated in FIG. **76**, and a second compressed configuration, as illustrated in FIG. **77**. In the second compressed configuration, the spring **4316** lifts or maintains the latch **4304** out of engagement with the drive train **4302**, as illustrated in FIG. **77**. When the spring **4316** is allowed to return to the first compressed configuration, the latch **4304** is also returned into engagement with the drive train **4302**, as illustrated in FIG. **76**.

[0494] Further to the above, a permanent magnet **4318** is attached to the latch **4304**. Alternatively, the latch **4304**, or at least a portion thereof, can be made from a ferromagnetic material. When the electrical circuit **4308** activates the electrical magnet **4310**, the permanent magnet **4318** is attracted toward the electrical magnet **4310** causing the spring **4316** to be biased or compressed. In addition, the permanent magnet **4318** causes the latch **4304** to be lifted or transitioned out of engagement with the drive train **4302**, as illustrated in FIG. **77**. However, when the electrical circuit **4308** deactivates the electrical magnet **4310**, the biasing force of the spring **4316** returns the permanent magnet **4318** and the latch **4304** to their original positions where the latch **4304** is engaged with the drive train **4302**, as illustrated in FIG. **76**.

[0495] Referring to FIG. **78**, a safety mechanism **4347** of a surgical stapling and cutting instrument may include a controller **4050** which may comprise a processor **4052** and/or one or more storage mediums such as, for example, a memory **4054**. By executing instruction code stored in the memory **4054**, the processor **4052** may control activating and/or deactivating the lockout mechanism **4300**. The processor **4052** may receive input **4320** regarding whether a staple cartridge is attached to the carrier **4022** and/or whether an attached staple cartridge is spent. Depending on the received input, the processor **4052** may activate or deactivate the lockout mechanism **4300** to permit or prevent the firing system **4056** from being used to perform a staple firing stroke.

[0496] FIGS. **80**-**82**B generally depict a motor-driven surgical fastening and cutting instrument **4500**. As illustrated in FIGS. **80** and **81**, the surgical instrument **4500** includes a handle assembly **4502**, a shaft assembly **4504**, and a power assembly **4506** ("power source," "power pack," or "battery pack"). The shaft assembly **4504** includes an end effector **4508** which can be configured to act as an endocutter for clamping, severing, and/or stapling tissue, although, in other instances, different types of end effectors may be used, such as end effectors for other types of surgical devices, graspers, cutters, staplers, clip appliers, access devices, drug/gene therapy devices, ultrasound devices, RF device, and/or laser devices, for example. Several RF devices may be found in U.S. Pat. No. 5,403,312, entitled ELECTROSURGICAL HEMOSTATIC DEVICE, which issued on Apr. 4, 1995, and U.S. patent application Ser. No. 12/031,573, entitled SURGICAL FASTENING AND CUTTING INSTRUMENT HAVING RF ELECTRODES, filed Feb. 14, 2008, the entire disclosures of which are incorporated herein by reference in their entirety.

[0497] Referring primarily to FIGS. **81**-**82**B, the handle assembly **4502** can be employed with a plurality of interchangeable shaft assemblies such as, for example, the shaft assembly **4504**. Such interchangeable shaft assemblies may comprise surgical end effectors such as, for example, the end effector **4508** that can be configured to perform one or more surgical tasks or procedures. Examples of suitable interchangeable shaft assemblies are disclosed in U.S. Provisional Patent Application Ser. No. 61/782,866, entitled CONTROL SYSTEM OF A SURGICAL INSTRUMENT, and filed Mar. 14, 2013, the entire disclosure of which is hereby incorporated herein by reference in its entirety.

[0498] Referring primarily to FIG. **81**, the handle assembly **4502** may comprise a housing **4510** that contains a handle **4512** that may be configured to be grasped, manipulated and actuated by a clinician. However, it will be understood that the various arrangements of the various forms of interchangeable shaft assemblies disclosed herein may also be effectively employed in connection with robotically-controlled surgical systems. Thus, the term "housing" may also encompass a housing or similar portion of a robotic system that houses or otherwise operably supports at least one drive system that is configured to generate and apply at least one control motion which could be used to actuate the interchangeable shaft assemblies disclosed herein and their respective equivalents. For example, the interchangeable shaft assemblies disclosed herein may be employed with various robotic systems, instruments, components and methods disclosed in U.S. patent application Ser. No. 13/118,241, entitled SURGICAL STAPLING INSTRUMENTS WITH ROTATABLE STAPLE DEPLOYMENT, now U.S. Pat. No. 9,072,535, the entire disclosure of which is incorporated by reference herein.

[0499] Referring again to FIG. **81**, the handle assembly **4502** operably supports a plurality of drive systems therein that can be configured to generate and apply various control motions to corresponding portions of the interchangeable shaft assembly that is operably attached thereto. For example, the handle assembly **4502** operably supports a first or closure drive system, which is employed to apply closing and opening motions to the shaft assembly **4504** while operably attached or coupled to the handle assembly **4502**. The handle assembly **4502** operably supports a firing drive system that is configured to apply firing motions to corresponding portions of the interchangeable shaft assembly attached thereto.

[0500] Referring primarily to FIGS. **82**A and **82**B, the handle assembly **4502** includes a motor **4514** which is controlled by a motor control circuit **4515** and is employed by the firing system of the surgical instrument **4500**. The motor **4514** may be a DC brushed driving motor having a maximum rotation of, approximately, 25,000 RPM. Alternatively, the motor **4514** may include a brushless motor, a cordless motor, a synchronous motor, a stepper motor, or any other suitable electric motor. The motor control circuit **4515** may comprise an H-Bridge field-effect transistors (FETs) **4519**, as illustrated in FIGS. **82**A and **82**B. The motor **4514** is powered by the power assembly **4506** (FIGS. **82**A and **82**B) which can be releasably mounted to the handle assembly **4502** for supplying control power to the surgical instrument **4500**. The power assembly **4506** comprises a battery which may include a number of battery cells connected in series that can be used as the power source to power the surgical instrument **4500**. The battery cells of the power assembly **4506** may be replaceable and/or rechargeable. In at

least one example, the battery cells can be Lithium-Ion batteries which can be separably couplable to the power assembly **4506**.

[0501] The shaft assembly **4504** includes a shaft assembly controller **4522** which communicates with the power management controller **4516** through an interface while the shaft assembly **4504** and the power assembly **4506** are coupled to the handle assembly **4502**. The interface may comprise a first interface portion **4525** which includes one or more electric connectors for coupling engagement with corresponding shaft assembly electric connectors and a second interface portion **4527** which includes one or more electric connectors for coupling engagement with corresponding power assembly electric connectors to permit electrical communication between the shaft assembly controller **4522** and the power management controller **4516** while the shaft assembly **4504** and the power assembly **4506** are coupled to the handle assembly **4502**. One or more communication signals can be transmitted through the interface to communicate one or more of the power requirements of the attached interchangeable shaft assembly **4504** to the power management controller **4516**. In response, the power management controller modulates the power output of the battery of the power assembly **4506**, as described below in greater detail, in accordance with the power requirements of the attached shaft assembly **4504**. One or more of the electric connectors comprise switches which can be activated after mechanical coupling engagement of the handle assembly **4502** to the shaft assembly **4504** and/or to the power assembly **4506** to allow electrical communication between the shaft assembly controller **4522** and the power management controller **4516**.

[0502] The interface facilitates transmission of the one or more communication signals between the power management controller **4516** and the shaft assembly controller **4522** by routing such communication signals through a main controller **4517** residing in the handle assembly **4502**. Alternatively, the interface can facilitate a direct line of communication between the power management controller **4516** and the shaft assembly controller **4522** through the handle assembly **4502** while the shaft assembly **4504** and the power assembly **4506** are coupled to the handle assembly **4502**.

[0503] The main controller **4517** may be any single core or multicore processor such as those known under the trade name ARM Cortex by Texas Instruments. The surgical instrument **4500** may comprise a power management controller **4516** such as a safety microcontroller platform comprising two microcontroller-based families such as TMS570 and RM4x known under the trade name Hercules ARM Cortex R4, also by Texas Instruments. Nevertheless, other suitable substitutes for microcontrollers and safety processor may be employed, without limitation. The safety processor may be configured specifically for IEC 61508 and ISO 26262 safety critical applications, among others, to provide advanced integrated safety features while delivering scalable performance, connectivity, and memory options.

[0504] The main controller **4517** may be an LM 4F230H5QR, available from Texas Instruments. The Texas Instruments LM4F230H5QR is an ARM Cortex-M4F Processor Core comprising on-chip memory of 256 KB single-cycle flash memory, or other non-volatile memory, up to 40 MHz, a prefetch buffer to improve performance above 40 MHz, a 32 KB single-cycle serial random access memory (SRAM), internal read-only memory (ROM) loaded with StellarisWare® software, 2 KB electrically erasable programmable read-only memory (EEPROM), one or more pulse width modulation (PWM) modules, one or more quadrature encoder inputs (QEI) analog, one or more 12-bit Analog-to-Digital Converters (ADC) with **12** analog input channels, among other features that are readily available for the product datasheet. The present disclosure should not be limited in this context.

[0505] The power assembly **4506** includes a power management circuit which comprises the power management controller **4516**, a power modulator **4538**, and a current sense circuit **4536**. The power management circuit is configured to modulate power output of the battery based on the power requirements of the shaft assembly **4504** while the shaft assembly **4504** and the power assembly **4506** are coupled to the handle assembly **4502**. For example, the power management controller **4516** can be programmed to control the power modulator **4538** of the power output of the power assembly **4506** and the current sense circuit **4536** is employed to monitor power output of the power assembly **4506** to provide feedback to the power management controller **4516** about the power output of the battery so that the power management controller **4516** may adjust the power output of the power assembly **4506** to maintain a desired output.

[0506] It is noteworthy that one or more of the controllers of the present disclosure may comprise one or more processors and/or memory units which may store a number of software modules. Although certain modules and/or blocks of the surgical instrument **4500** may be described by way of example, it can be appreciated that a greater or lesser number of modules and/or blocks may be used. Further, although various instances may be described in terms of modules and/or blocks to facilitate description, such modules and/or blocks may be implemented by one or more hardware components, e.g., processors, Digital Signal Processors (DSPs), Programmable Logic Devices (PLDs), Application Specific Integrated Circuits (ASICs), circuits, registers and/or software components, e.g., programs, subroutines, logic and/or combinations of hardware and software components.

[0507] The surgical instrument **4500** may comprise an output device **4542** which includes one or more devices for providing a sensory feedback to a user. Such devices may comprise visual feedback devices (e.g., an LCD display screen, LED indicators), audio feedback devices (e.g., a speaker, a buzzer) or tactile feedback devices (e.g., haptic actuators). The output device **4542** may comprise a display **4543** which may be included in the handle assembly **4502**. The shaft assembly controller **4522** and/or the power management controller **4516** can provide feedback to a user of the surgical instrument **4500** through the output device **4542**. The interface **4524** can be configured to connect the shaft assembly controller **4522** and/or the power management controller **4516** to the output device **4542**. The reader will appreciate that the output device **4542** can instead be integrated with the power assembly **4506**. In such circumstances, communication between the output device **4542** and the shaft assembly controller **4522** may be accomplished through the interface **4524** while the shaft assembly **4504** is coupled to the handle assembly **4502**.

[0508] Having described a surgical instrument **4500** in general terms, the description now turns to a detailed description of various electrical/electronic component of the surgical instrument **4500**. For expedience, any references

herein to the surgical instrument **4500** should be construed to refer to the surgical instrument **4500** shown in connection with FIGS. **80-82**B. Turning to FIG. **79**, a circuit **4700** is depicted. The circuit **4700** is configured to control a powered surgical instrument, such as the surgical instrument **4500** illustrated in FIG. **80**. The circuit **4700** is configured to control one or more operations of the powered surgical instrument **4500**. The circuit **4700** includes a safety processor **4704** and a main or primary processor **4702**. The safety processor **4704** and/or the primary processor **4702** are configured to interact with one or more additional circuit elements to control operation of the powered surgical instrument **4500**. The primary processor **4702** comprises a plurality of inputs coupled to one or more circuit elements. The circuit **4700** can be a segmented circuit. In various instances, the circuit **4700** may be implemented by any suitable circuit, such as a printed circuit board assembly (PCBA) within the powered surgical instrument **4500**.

[0509] It should be understood that the term processor as used herein includes any microprocessor, microcontroller, or other basic computing device that incorporates the functions of a computer's central processing unit (CPU) on an integrated circuit or at most a few integrated circuits. The processor is a multipurpose, programmable device that accepts digital data as input, processes it according to instructions stored in its memory, and provides results as output. It is an example of sequential digital logic, as it has internal memory. Processors operate on numbers and symbols represented in the binary numeral system.

[0510] The primary processor **4702** is any single core or multicore processor such as those known under the trade name ARM Cortex by Texas Instruments. The safety processor **4604** may be a safety microcontroller platform comprising two microcontroller-based families such as TMS570 and RM4x known under the trade name Hercules ARM Cortex R4, also by Texas Instruments. Nevertheless, other suitable substitutes for microcontrollers and safety processor may be employed, without limitation. In one embodiment, the safety processor **4704** may be configured specifically for IEC 61508 and ISO 26262 safety critical applications, among others, to provide advanced integrated safety features while delivering scalable performance, connectivity, and memory options.

[0511] The primary processor **4702** may be an LM 4F230H5QR, available from Texas Instruments. The Texas Instruments LM4F230H5QR is an ARM Cortex-M4F Processor Core comprising on-chip memory of 256 KB single-cycle flash memory, or other non-volatile memory, up to 40 MHz, a prefetch buffer to improve performance above 40 MHz, a 32 KB single-cycle serial random access memory (SRAM), internal read-only memory (ROM) loaded with StellarisWare® software, 2 KB electrically erasable programmable read-only memory (EEPROM), one or more pulse width modulation (PWM) modules, one or more quadrature encoder inputs (QEI) analog, one or more 12-bit Analog-to-Digital Converters (ADC) with **12** analog input channels, among other features that are readily available for the product datasheet. Other processors may be readily substituted and, accordingly, the present disclosure should not be limited in this context. Examples of powered surgical instruments that include primary processors and safety processors are described in U.S. Patent Application Publication No. 2015/0272574, entitled POWER MANAGEMENT THROUGH SLEEP OPTIONS OF SEGMENTED CIRCUIT AND WAKE UP CONTROL, filed Mar. 26, 2014, the entire disclosure of which is incorporated herein by reference.

[0512] The safety processor **4704** is configured to implement a watchdog function with respect to one or more operations of the powered surgical instrument **4500**. In this regard, the safety processor **4704** employs the watchdog function to detect and recover from malfunctions of the primary processor **4702**. During normal operation, the safety processor **4704** monitors for hardware faults or program errors of the primary processor **4702** and to initiate corrective action or actions. The corrective actions may include placing the primary processor **4702** in a safe state and restoring normal system operation. In at least one aspect, the primary processor **4702** and the safety processor **4704** operate in a redundant mode.

[0513] The primary processor **4702** and the safety processor **4704** are housed in a handle portion of the powered surgical stapling and cutting instrument **4500**. At least one of the primary processor **4702** and the safety processor **4704** is in communication with a shaft processor **4706** through an interface **4707**. The shaft processor **4706** is configured to receive input from a cartridge detection system **4709** configured to detect whether an unspent staple cartridge has been attached to the powered surgical stapling and cutting instrument **4500**.

[0514] The circuit **4700** further includes a motor **4714** operably coupled to a firing member of the powered surgical stapling and cutting instrument **4500**. One or more rotary position encoders **4741** can be configured to provide feedback to the primary processor **4702** and/or the safety processor **4704** as to the operational status of the motor **4714**. A motor driver, including a metal-oxide-semiconductor field-effect transistor (MOSFET) **4711**, controls power delivery to the motor **4714** from a power source **4713**. The MOSFET **4711** is controlled by an AND logic gate **4717**. A high output of the AND logic gate **4717** causes the MOSFET **4711** to be activated, which causes the motor **4714** to run. The high output of the AND logic gate **4717** depends on receiving an input from the primary processor **4702** and the safety processor **4704**, as illustrated in FIG. **79**. The primary processor **4702** and the safety processor **4704** are configured to independently determine whether to allow the motor **4714** to run. Said another way, the primary processor **4702** and the safety processor **4704** are configured to independently determine whether to permit advancement of the firing member of the powered surgical stapling and cutting instrument **4500**.

[0515] In the event of an agreement, where both of the primary processor **4702** and the safety processor **4704** determine to run the motor **4714**, the AND logic gate **4717** produces a high output causing the MOSFET **4711** to be activated thereby allowing the motor **4714** to run and, in turn, the firing member to be advanced to fire the powered surgical stapling and cutting instrument **4500**. However, in the event of a disagreement, where only one of the primary processor **4702** and the safety processor **4704** determines to run the motor **4714** while the other one of the primary processor **4702** and the safety processor **4704** determines not to run the motor **4714**, the AND logic gate **4717** fails to produce a high output and, in turn, the MOSFET **4711** remains inactive.

[0516] Further to the above, the decision as to whether to run the motor **4714** depends, at least in part, on information

communicated to the primary processor **4702** and/or the safety processor **4704** through the interface **4707** regarding whether or not an unspent staple cartridge has been attached to the powered surgical stapling and cutting instrument **4500**. As described in greater detail elsewhere herein, a cartridge detection system **4709** can be employed to determine, among other things, whether or not an unspent staple cartridge, is attached to the powered surgical stapling and cutting instrument **4500**.

[0517] Referring to FIGS. **79**A-**79**B, a translatable staple firing member **4460** of a stapling assembly **4400** of the powered surgical stapling and cutting instrument **4500** is movable between a proximal, unfired, or start position and a distal, fired, or end position along a staple firing path **4463**. A detectable magnetic element **4461**, for example, is mounted to the staple firing member **4460** which moves along, or at least substantially along, the staple firing path **4463**. In at least one instance, the magnetic element **4461** is a permanent magnet, for example, which is comprised of iron, nickel, and/or any other suitable material. The cartridge detection system **4709** comprises a first, or proximal, sensor **4401'** and a second, or distal, sensor **4401** which are configured to detect the magnetic element **4461** as it moves along the staple firing path **4463** with the staple firing member **4460**. The first sensor **4401'** and the second sensor **4401** each comprise a Hall Effect sensor; however, the sensors **4401'** and **4401** can comprise any suitable sensor. The sensors **4401'** and **4401** output a voltage that varies depending on their respective distances from the magnetic element **4461** (a higher voltage is output when the distance is small and a lesser voltage is output when the distance is great).

[0518] Further to the above, the cartridge detection system **4709** comprises a sensor circuit **4708** including, among other things, a voltage source **4403**, for example, in communication with the sensors **4401'** and **4401** which supplies power to the sensors **4401'** and **4401**. The sensor circuit **4708** further comprises a first switch **4405'** in communication with the first sensor **4401'** and a second switch **4405** in communication with the second sensor **4401**. In at least one instance, the switches **4401'** and **4401** each comprise a transistor, such as a FET, for example. The outputs of the sensors **4401'**, **4401** are connected to the central (gate) terminal of the switches **4405'**, **4405**, respectively. Prior to the firing stroke of the staple firing member **4460**, the output voltages from the sensors **4401'**, **4401** are high so that the first switch **4405'** and the second switch **4405** are in closed conditions.

[0519] When the magnetic element **4461** passes by the first sensor **4401'**, the voltage output of the first sensor **4401'** is sufficient to change the first switch between a closed condition and an open condition. Similarly, the voltage output of the second sensor **4401** is sufficient to change the second switch **4405** between a closed condition and an open condition when the magnetic element **4461** passes by the second sensor **4401**. When both of the switches **4405'** and **4405** are in an open condition, a ground potential is applied to an operational amplifier circuit **4406**. The operational amplifier circuit **4406** is in signal communication with an input channel of a shaft processor **4706** of the motor controller and, when a ground potential is applied to the operational amplifier circuit **4406**, the processor **4706** receives a ground signal from the circuit **4406**.

[0520] When the processor **4706** receives a ground signal from the circuit **4406**, the processor **4706** can determine that the staple firing stroke has been completed and that the staple cartridge positioned in the stapling assembly **4400** has been completely spent. Other embodiments are envisioned in which the sensor system is configured to detect a partial firing stroke of the staple firing member **4460** and supply a signal to the processor **4706** that indicates that the staple cartridge has been at least partially spent. In either event, the motor controller can be configured to prevent the staple firing member **4460** from performing another firing stroke until the staple cartridge has been replaced with an unspent cartridge. In at least one instance, further to the above, the sensor system comprises a sensor configured to detect whether the spent cartridge has been detached from the stapling assembly and/or whether an unspent cartridge has been assembled to the stapling assembly.

[0521] Further to the above, the sensor system can be configured to detect whether the staple firing member **4460** has been retracted along a retraction path **4462**. In at least one instance, the magnetic element **4461** can be detected by the sensor **4401** as the magnetic element **4461** is retracted along the path **4462** and change the second switch **4405** back into a closed condition. Similarly, the magnetic element **4461** can be detected by the sensor **4401'** as the magnetic element **4461** is retracted along the path **4463** and change the first switch **4405'** back into a closed condition. By closing the switches **4405** and **4405'**, the voltage polarity from the battery **4403** is applied to the circuit **4406** and, as a result, the processor **4706** receives a Vcc signal from the circuit **4406** on its input channel.

[0522] Further to the above, the cartridge detection system **4709** includes a cartridge circuit **4724**. The cartridge circuit **4624** is similar in many respects to the cartridge circuit **4024** (FIG. **59**). For example, the cartridge circuit **4724** includes a trace element **4734** which is transitioned between a severed status, where the staple cartridge is spent, and an intact status, where the staple cartridge is unspent. As illustrated in FIG. **79**, the trace element **4734** is positioned in parallel with a first resistive element **4737** and in series with a second resistive element **4737'** to insure that the detection of failure of the sensor or interruption of its circuit is not merely lack of signal output. One or more sensors, including but not limited to voltage and/or current sensors, can be employed to detect a current status and/or a transition between severed status and an intact status.

[0523] As illustrated in FIG. **79**, accurate communications between the processors **4702**, **4704**, and **4706** can be ensured using security codes such as, for example, cyclic redundancy checks (CRC) which are error-detecting codes attached to data communications to detect accidental changes in communicated data which may occur during data transmission. Blocks of data entering these systems get a short check value attached, based on the remainder of a polynomial division of their contents. In certain instances, two parameter sets with separate CRCs are loaded into the shaft processor **4706** wherein one is normal and the other has a STOP command, for example, and parameters like a 0 mm transection length.

[0524] In at least one instance, the primary processor **4702** tracks the status of the trace element **4734** via a shared universal asynchronous receiver/transmitter (UART) pin, and the position of the motor **4714** via the rotary position encoder **4741**, for example. The primary processor **4702** can

be configured to prevent the motor **4714** from running if the primary processor **4702** detects that the trace element **4734** has been severed.

[0525] In various instances, the primary processor **4702** and/or the safety processor **4704** can be configured to prevent the motor **4714** from running if a movement of the firing member is detected by the proximal sensor **4401'**, as described above, after a severed status of the trace element **4734** is detected. The detection of the movement of the firing member and the severed status of the trace element **4734** can be performed by the cartridge detection system **4709**, as described above. The shaft processor **4706** can be configured to send a STOP command to the primary processor **4702** and/or the safety processor **4704** a severed status of the trace element **4734** is detected. The communication between the shaft processor **4706**, the primary processor **4702**, and/or the safety processor **4704** can be a CRC communication, for example. In various instances, the safety processor **4704** is configured to watch for the STOP command and to enter a sleep mode once the STOP command is received. In various instances, the safety processor **4704** is configured to stop the motor **4714** from running if a computed CRC, which is computed from the received data, does not match the received CRC. A CRC verification module can be employed by the safety processor **4704** to compute a CRC from the received data and compare the computed CRC with the received CRC.

[0526] In various instances, the primary processor **4702**, the safety processor **4704**, and/or the shaft processor **4706** may comprise security code generator modules and/or security code verification modules. Security codes can be generated by CHECK-SUM, HASH, or other suitable protocols. The security code generation module and/or the security code verification module may be implemented in hardware, firmware, software or any combination thereof. Ensuring the validity of the communications between the primary processor **4702**, the safety processor **4704**, and/or the shaft processor **4706** is important because body fluids may interfere with communicated signals between such processors.

[0527] As described above, the shaft processor **4706** can be configured to send a STOP command to the primary processor **4702** and/or the safety processor **4704** via a CRC communication. In one example, the shaft processor **4706** includes a security code generator configured to generate a security code and attached the security code to the STOP command transmitted to the primary processor **4702**, for example. The primary processor **4702** includes a security code verification module configured to verify the integrity of the transmission received from the shaft processor **4706**. The security code verification module is configured to compute a security code based on the received STOP command data and compare the computed security code to the security code received with the STOP command data. If the primary processor **4702** confirms the integrity of the received message, the primary processor **4702** may activate a stop mode **4688**, for example.

[0528] In certain instances, the safety processor **4704** may be tasked with ensuring the integrity of messages transmitted to the primary processor **4702**. In one example, the safety processor **4704** includes a security code verification module configured to verify the integrity of a message transmission from the shaft processor **4706**. The security code verification module of the safety processor **4704** is configured to compute a security code based on the received STOP command data and compare the computed security code to the security code received with the STOP command data. If the safety processor **4704** confirms the integrity of the received message, the safety processor **4704** may activate a stop mode **4688** (FIG. **86**), for example.

[0529] Turning now to FIG. **83**, a circuit **4600** is configured to control a powered surgical instrument, such as the surgical instrument **4500** illustrated in FIG. **80**. The circuit **4600** is configured to control one or more operations of the powered surgical instrument **4500**. The circuit **4600** includes a safety processor **4604** and a main or primary processor **4602**, which are similar in many respects to the safety processor **4704** and the primary processor **4702**, respectively. The safety processor **4604** and/or the primary processor **4602** are configured to interact with one or more additional circuit elements to control operation of the powered surgical instrument **4500**. The primary processor **4602** comprises a plurality of inputs coupled to one or more circuit elements. The circuit **4600** can be a segmented circuit. In various instances, the circuit **4600** may be implemented by any suitable circuit, such as a printed circuit board assembly (PCBA) within the powered surgical instrument **4500**.

[0530] The circuit **4600** comprises a feedback element in the form of a display **4609**. The display **4609** comprises a display connector coupled to the primary processor **4602**. The display connector couples the primary processor **4602** to a display **4609** through one or more display driver integrated circuits. The display driver integrated circuits may be integrated with the display **4609** and/or may be located separately from the display **4609**. The display **4609** may comprise any suitable display, such as an organic light-emitting diode (OLED) display, a liquid-crystal display (LCD), and/or any other suitable display. In some embodiments, the display **4609** is coupled to the safety processor **4604**. Furthermore, the circuit **4600** further comprises one or more user controls **4611**, for example.

[0531] The safety processor **4604** is configured to implement a watchdog function with respect to one or more operations of the powered surgical instrument **4500**. In this regard, the safety processor **4604** employs the watchdog function to detect and recover from malfunctions of the primary processor **4602**. During normal operation, the safety processor **4604** is configured to monitor for hardware faults or program errors of the primary processor **4602** and to initiate corrective action or actions. The corrective actions may include placing the primary processor **4602** in a safe state and restoring normal system operation.

[0532] In at least one aspect, the primary processor **4602** and the safety processor **4604** operate in a redundant mode. The primary processor **4602** and the safety processor **4604** are coupled to at least a first sensor. The first sensor measures a first property of the surgical instrument **4500**. The primary processor **4602** is configured to determine an output based on the measured first property of the surgical instrument **4500** and compare the output to a predetermined value. Likewise, the safety processor **4604** is configured to separately determine an output based on the measured first property of the surgical instrument **4500** and compare the output to the same predetermined value. The safety processor **4604** and the primary processor **4602** are configured to provide a signal indicative of the value of their determined outputs. When either the safety processor **4604** or the primary processor **4602** indicates a value outside of an acceptable range, appropriate safety measures can be acti-

vated. In certain instances, the primary processor **4602** and the safety processor **4604** receive their inputs from separate sensors that are configured to separately measure the first property of the surgical instrument **4500**. In certain instances, when at least one of the safety processor **4604** and the primary processor **4602** indicates a value within an acceptable range, the surgical instrument **4500** is allowed to continue in a normal mode of operation. For example, the firing system **4056** can be allowed to complete a firing stroke of the surgical instrument **4500** when at least one of the safety processor **4604** and the primary processor **4602** indicates a value within an acceptable range. In such instances, a discrepancy between the values or results determined by the safety processor **4604** and the primary processor **4602** can be attributed to a faulty sensor or a calculation error, for example.

[0533] As illustrated in FIG. **83**, linear position encoders **4640** and **4641** are coupled to the primary processor **4602** and the safety processor **4604**, respectively. The position encoder **4640** provides speed and position information about a firing member of the powered surgical instrument **4500** to the primary processor **4602** an analog to digital converters **4623***a* (ADCs). Likewise, the position encoder **4640** provides speed and position information about a firing member of the powered surgical instrument **4500** to the safety processor **4604** through a separate analog to digital converter **4623***b* (ADCs). The primary processor **4602** and the safety processor **4604** are configured to execute an algorithm for calculating at least one acceleration of the firing member based on the information derived from the linear position encoders **4640** and **4641**. The acceleration of the firing member can be determined based on the following equation:

$$a = \frac{v_2 - v_1}{t_2 - t_1},$$

wherein a is the current acceleration of the firing member, wherein v_2 is a current velocity of the firing member recorded at time t_2, and wherein v_1 is a previous velocity of the firing member at a previous time t_1.

[0534] The acceleration of the firing member can also be determined based on the following equation:

$$a = \frac{d_2 - d_1}{(t_2 - t_1)^2},$$

wherein a is the current acceleration of the firing member, wherein d_2 is a distance traveled by the firing member between an initial position and a current position during a time t_2, and wherein d_1 is a distance traveled by the firing member between an initial position a previous position during a time t_1.

[0535] The primary processor **4602** is further configured to compare the determined acceleration value to a predetermined threshold acceleration which can be stored in a memory unit in communication with the primary processor **4602**, for example. Likewise, the safety processor **4604** is configured to compare its determined acceleration value to a predetermined threshold acceleration which can be stored in a memory unit in communication with the safety processor **4604**, for example. In the event the primary processor **4602** and/or the safety processor **4604** determine that the determined acceleration values are beyond the a predetermined threshold acceleration, appropriate safety measures can be taken such as, for example, stopping power delivery to the motor **4514** and/or resetting the firing system **4056**. Alternatively, in certain instances, when at least one of the safety processor **4604** and the primary processor **4602** indicates an acceptable acceleration value, the surgical instrument **4500** is allowed to continue in a normal mode of operation. For example, the firing system **4056** can be allowed to complete a firing stroke of the surgical instrument **4500** when at least one of the safety processor **4604** and the primary processor **4602** reports an acceptable acceleration. In such instances, a discrepancy between the values or results determined by the safety processor **4604** and the primary processor **4602** can be attributed to a faulty sensor or a calculation error, for example.

[0536] As described above, the primary processor **4602** and the safety processor **4604** are further configured to compare the determined acceleration values to a predetermined threshold acceleration which can be stored in a memory unit, for example. The threshold acceleration can be determined from a threshold force corresponding to a failure load of a lockout mechanism of the firing system **4056**. In certain instances, the failure load is known to be about 100 lbf. In such instances, Newton's second law of motion can be employed to determine the corresponding threshold acceleration based on the equation:

$$F = m \times a$$

wherein F is the threshold force, and m is the mass exerting the force.

[0537] Acceleration of the firing member of the firing system **4056** can also be assessed by tracking the electrical current drawn by a motor **4514** during a firing stroke. The load on a firing member driven by the motor **4514** through a firing stroke is directly related the electrical current drawn by a motor **4514**. Accordingly, the load experienced by the firing member can be assessed by measuring the electrical current drawn by the motor **4514** during a firing stroke. Newton's second law of motion can be employed to calculate the acceleration of the firing member based on the load experienced by the firing member which can be assessed by tracking the electrical current drawn by a motor **4514** during the firing stroke.

[0538] As illustrated in FIG. **84**A, a sensor **4617** can be coupled to a motor control circuit **4619** to measure the current drawn by the motor **4514** during the firing stroke. In at least one instance, the sensor **4617** can be a current sensor or a Hall effect sensor, for example. The readings of the sensor **4617** can be amplified using a buffer amplifier **4625**, digitized using an ADC **4623**, and transmitted to the primary processor **4602** (FIG. **83**) and the safety processor **4604** (FIG. **83**) which are configured to execute an algorithm to determine the corresponding load on the firing member and determine an acceleration of the firing member based on Newton's second law of motion.

[0539] Referring to FIG. **84**A, the sensor **4617** can be coupled to the motor control circuit **4619** to measure the current drawn by the motor **4514** during the firing stroke. During normal operation of the motor **4514**, the readings of the sensor **4617** are expected to be within a normal predetermined range. As illustrated in FIG. **84**B, the normal range can have a minimum threshold of about 0.5 A, for example,

and a maximum threshold of about 5.0 A, for example. A sensor reading above the maximum threshold or a sensor reading above zero but below the minimum threshold can indicate a failure in the sensor **4617**. The maximum threshold can be any value selected from a range of about 4.0 A, for example, to 6.0 A, for example. The minimum threshold can be any value selected from a range of about 0.4 A, for example, to 0.6 A, for example.

[0540] As described above, the readings of the sensor **4617** can be amplified using a buffer amplifier **4625**, digitized using an ADC **4623**, and transmitted to the primary processor **4602** which is configured to execute an algorithm to determine whether the readings of the sensor **4617** are within a predetermined normal range. In the event it is determined that the readings of the sensor **4617** is beyond the predetermined normal range, appropriate safety measures can be taken by the primary processor **4602**. In one example, the primary processor **4602** may permit completion of the firing stroke in a safe mode because the abnormal motor current readings are likely due to a faulty sensor **4617**. In another example, the primary processor may cause power delivery to the motor **4514** to be stopped and alert a user to utilize a mechanical bailout feature. The primary processor **4602** may alert a user through the display **4058** to contact a service department to replace the faulty sensor **4617**. The primary processor **4602** may provide instructions on how to replace the faulty sensor **4617**.

[0541] In certain instances, the safety processor **4604** can be configured to receive readings from another sensor, independent from the sensor **4617**, configured to separately measure the current drawn by the motor **4514** during the firing stroke. Like the primary processor **4602**, the safety processor **4604** can be configured to execute an algorithm to determine whether the readings of the other sensor are within a predetermined normal range. If at least one of the primary processor **4602** and the secondary processor **4604** determines that the current drawn by the motor **4514** is within the predetermined normal range, the motor **4514** is allowed to complete the firing stroke. In such instances, a discrepancy between the values or results determined by the safety processor **4604** and the primary processor **4602** are attributed to a faulty sensor or a calculation error, for example.

[0542] In certain instances, the primary processor **4602** and the safety processor **4604** can be configured to track or determine at least one acceleration of a firing member of the firing system **4056** using different techniques. If at least one of the primary processor **4602** and the safety processor **4604** determines that the acceleration of the firing member is within a normal range, the firing member is allowed to complete the firing stroke. A discrepancy between the acceleration values determined by the safety processor **4604** and the primary processor **4602** can be attributed to a faulty sensor or a calculation error. This ensures unnecessary interruptions of the firing system **4056** that are due to a faulty sensor or a calculation error.

[0543] In one example, the primary processor **4602** can be configured to determine or track an acceleration of a firing member of the firing system **4056** using a first technique. For example, the primary processor **4602** can be configured to determine or track an acceleration of the firing member by employing the sensor **4617** to measure the current drawn by the motor **4514**. The primary processor **4602** can then execute an algorithm for calculating at least one acceleration of the firing member based on input from the sensor **4617**, as described above. On the other hand, the safety processor **4604** can be configured to determine or track the acceleration of the firing member using a second technique, different than the first technique. For example, the safety processor **4604** can be configured to determine or track the same acceleration of the firing member by employing the position encoders **4640** to detect the position of the firing member during a firing stroke. The safety processor **4604** can execute an algorithm for calculating at least one acceleration of the firing member based on input from the position encoders **4640**, as described above. The calculated accelerations can be compared against a predetermined normal range. In the event, the primary processor **4602** and the safety processor **4604** are in agreement that their respective acceleration values are within the normal range, the firing member is allowed to complete the firing stroke. If, however, the primary processor **4602** and the safety processor **4604** are in agreement that their respective acceleration values are outside the normal range, appropriate safety measures can be taken by the primary processor **4602**, for example, as described above. In the event of a discrepancy between the outcomes determined by the primary processor **4602** and the safety processor **4604** with regard to the acceleration of the firing member, the firing member is allowed to complete the firing stroke.

[0544] Firing the powered surgical cutting and stapling instrument **4500** involves a mechanical component, where a firing trigger is squeezed by a user, and an electrical component, where an electrical current flows to the motor **4514** in response to a transition of the motor control circuit **4515** from an open configuration to a closed configuration when the firing trigger is squeezed by the user. A trigger-sensing control circuit **4627** (FIG. **84**A) of the powered surgical cutting and stapling instrument **4500** includes a firing-trigger Hall effect sensor **4629** which is configured to detect the transition of the firing trigger **4550** between an open configuration and a closed configuration. In addition, the trigger-sensing control circuit **4627** also includes a verification-trigger Hall effect sensor **4631** configured to detect current drawn by the motor **4514** when the firing trigger is transitioned to the closed configuration. The sensors **4629** and **4631** are in signal communication with the primary processor **4602** and/or the safety processor **4604**. The readings of the sensor **4629** and **4631** are amplified using buffer amplifiers **4625**, digitized using ADCs **4623** and transmitted to the primary processor **4602** and/or the safety processor **4604** for analysis and comparison.

[0545] During normal operation, the transmitted readings of the sensors **4629** and **4631** provide a redundant assurance to the primary processor **4602** that the mechanical and electrical components involved in the firing of the powered surgical cutting and stapling instrument **4500** are functioning properly. In the event of a disagreement, where the sensor **4629** indicates that firing trigger has been squeezed while the sensor **4631** indicates that no current is being drawn by the motor **4514**, the primary processor **4602** may determine that the sensor **4631** is not functioning properly. Where the sensor **4629** fails to indicate that firing trigger has been squeezed while the sensor **4631** indicates that current is being drawn by the motor **4514**, the primary processor **4602** may determine that the sensor **4629** is not functioning properly. In one aspect, the primary processor **4602** may permit completion of the firing stroke in a safe mode because

the disagreement is attributed to a faulty sensor. In another example, the primary processor may cause power delivery to the motor **4514** to be stopped and alert a user, for example, to utilize a mechanical bailout feature. The primary processor **4602** may alert a user through the display **4058** to contact a service department to replace the faulty sensor. The primary processor **4602** may provide instructions on how to replace the faulty sensor.

[0546] As illustrated in FIG. **83**, the primary processor **4602** and/or the safety processor **4604** are in signal communication with one or more linear position encoders **4640** and/or one or more rotary position encoders **4641**. The rotary position encoder **4641** is configured to identify the rotational position and/or speed of a motor **4514**. In addition, the linear position encoder **4640** is configured to identify the position and/or speed of the firing member which is driven by the motor **4514** during a firing stroke of the surgical cutting and stapling instrument **4500**.

[0547] During normal operation, the readings of the rotary position encoder **4641** are in correlation with the readings of the linear position encoders **4640**. This is because the motor **4514** is operably coupled to the firing member such that the rotation of the motor **4514** causes the firing member to be advanced during the firing stroke. The readings of the rotary position encoder **4641** may not correlate with the readings of the linear position encoders **4640** if the advancement speed of the firing member is outside a tolerance band as measured by the linear position encoder **4640**. Upon detecting a loss in the correlation between the readings of the rotary position encoder **4641** and the readings of the linear position encoders **4640**, appropriate safety measures can be activated by the primary processor **4602** and/or the safety processor **4604**.

[0548] In various instances, an input member such as, for example, a sensor or switch can be positioned in parallel with a first resistive element and in series with a second resistive element to insure that the detection of failure of the sensor or interruption of its circuit is not merely lack of signal output. Referring to FIG. **85**, an electrical circuit **4650** includes a beginning-of-stroke switch **4652** positioned in parallel with a first resistive element **4654** and in series with a second resistive element **4656**. In addition, the electrical circuit **4650** includes an end-of-stroke switch **4662** positioned in parallel with a first resistive element **4664** and in series with a second resistive element **4666**. Examples of beginning and end of stroke switches are described in U.S. Pat. No. 8,210,411, entitled MOTOR-DRIVEN SURGICAL CUTTING INSTRUMENT, issued on Jul. 3, 2012, which is incorporated herein by reference its entirety.

[0549] The electrical circuit **4650** also includes a voltage source **4660** providing an input voltage of 5 volts, for example. As illustrated in FIG. **85**, output voltages **4659** and **4669** can be processed by buffer amplifiers **4625** and ADCs **4623** to generate digital outputs which can be communicated to the primary processor **4602**. The primary processor **4602** is configured to execute an algorithm to assess one or more statuses of the circuit **4650** based on the received digital outputs. In the event the output voltage **4659** is equal to the input voltage of the voltage source **4660**, the primary processor **4602** determines that connection wires **4658** are disconnected. In the event the output voltage **4659** is equal to half of the input voltage of the voltage source **4660**, the primary processor **4602** determines that connection wires **4658** are connected but the beginning-of-stroke switch **4652** is in an open configuration. In the event the output voltage **4659** is equal to one third of the input voltage of the voltage source **4660**, the primary processor **4602** determines that connection wires **4658** are connected and the beginning-of-stroke switch **4652** is in a closed configuration. In the event the output voltage **4659** is equal to zero, the primary processor **4602** determines that there is a short in the circuit **4650**. In certain instances, determining that the output voltage **4659** is equal to zero indicates a failure of the end-of-stroke switch **4652**. In certain instances, determining that the output voltage **4659** is equal to the input voltage indicates a failure of the end-of-stroke switch **4652**.

[0550] In the event the output voltage **4669** is equal to the input voltage of the voltage source **4660**, the primary processor **4602** determines that connection wires **4668** are disconnected. In the event the output voltage **4669** is equal to half of the input voltage of the voltage source **4660**, the primary processor **4602** determines that connection wires **4668** are connected but the end-of-stroke switch **4662** is in an open configuration. In the event the output voltage **4669** is equal to one third of the input voltage of the voltage source **4660**, the primary processor **4602** determines that connection wires **4668** are connected and the end-of-stroke switch **4662** is in a closed configuration. In the event the output voltage **4669** is equal to zero, the primary processor **4602** determines that there is a short in the circuit **4650**. In certain instances, determining that the output voltage **4669** is equal to zero indicates a failure of the end-of-stroke switch **4662**. In certain instances, determining that the output voltage **4669** is equal to the input voltage indicates a failure of the end-of-stroke switch **4662**.

[0551] Referring now to FIG. **86**, a powered surgical stapling and cutting instrument **4500** may comprise a failure response system **4681** that includes a number of operational modes that can be selectively engaged in response to input, or the lack thereof, from the above-described positions encoders, sensors, and/or switches of the powered surgical stapling and cutting instrument **4500**. As illustrated in FIG. **86**, a warning mode **4682** is activated if the readings of the sensor **4617**, which represent current drawn by the motor **4514**, are beyond a predetermined normal range. The warning mode **4682** is also activated if a failure of at least one of the beginning-of-stroke switch **4652** and the end-of-stroke switch **4662** is detected.

[0552] The warning mode **4682** is limited to providing a user of the powered surgical cutting and stapling instrument **4500** with a warning without taking additional steps to stop or modify the progress or parameters of a firing stroke. The warning mode **4682** is activated in situations where aborting a firing stroke is unnecessary. For example, the warning mode **4682** is activated when a detected error is deemed to be attributed to a failed sensor or switch. The warning mode **4682** employs the user interface **4058** to deliver a visual, audio, and/or haptic warning.

[0553] The powered surgical cutting and stapling instrument **4500** further includes a warning/back-up system mode **4680**. The warning/back-up system mode **4680** is activated if the readings of the linear position encoder **4640** do not correlate with the readings of the rotary position encoder **4641**. Like the warning mode **4682**, the warning/back-up system mode **4680** employs the user interface **4058** to deliver a visual, audio, and/or haptic warning. In addition, warning/back-up system mode **4680** causes a back-up system to be activated. During normal operation, a normal

mode **4684** employs a primary system that includes primary sensors and primary control means. However, a back-up system which comprises secondary sensors and/or secondary control means is used in lieu of the primary system if an error is detected that warrants activation of the warning/back-up system mode **4680**.

[0554] Further to the above, the powered surgical cutting and stapling instrument **4500** also includes a limp mode **4686** which is a failure response mode or state that is triggered if (i) the readings of the linear position encoder **4640** do not correlate with the readings of the rotary position encoder **4641** and (ii) a failure of at least one of the beginning-of-stroke switch **4652** and the end-of-stroke switch **4662** is detected. Like the warning mode **4682**, the limp mode **4686** employs the user interface **4058** to deliver a visual, audio, and/or haptic warning. In addition, the limp mode **4686** slows the progress of the firing stroke.

[0555] In certain instances, the limp mode **4686** can reduce a current rotational speed of the motor **4514** by any percentage selected from a range of about 75% to about 25%. In one example, the limp mode **4686** can reduce a current rotational speed of the motor **4514** by 50%. In one example, the limp mode **4686** can reduce the current rotational speed of the motor **4514** by 75%. The limp mode **4686** may cause a current torque of the motor **4514** to be reduced by any percentage selected from a range of about 75% to about 25%. In one example, the limp mode **4686** may cause a current torque of the motor **4514** to be reduced by 50%.

[0556] Further to the above, the powered surgical cutting and stapling instrument **4500** also includes a stop mode **4688** which is an escalated failure response mode or state that is triggered if (i) the readings of the linear position encoder **4640** do not correlate with the readings of the rotary position encoder **4641**, (ii) a failure of at least one of the beginning-of-stroke switch **4652** and the end-of-stroke switch **4662** is detected, and (iii) the readings of the sensor **4617**, which represent current drawn by the motor **4514**, are beyond a predetermined normal range. Like the warning mode **4682**, the stop mode **4688** employs the user interface **4058** to deliver a visual, audio, and/or haptic warning. In addition, when triggered, the stop mode **4688** causes the motor **4514** to be deactivated or stopped leaving only a mechanical bailout system available for use to retract the firing member to a starting position. The stop mode **4688** employs the user interface **4058** to provide a user with instructions on operating the bailout system. Examples of suitable bailout systems are described in U.S. Patent Application Publication No. 2015/0272569, entitled FEEDBACK ALGORITHMS FOR MANUAL BAILOUT SYSTEMS FOR SURGICAL INSTRUMENTS, filed Mar. 26, 2014, which is incorporated herein by reference in its entirety.

[0557] The above-identified operational modes of the powered surgical stapling and cutting instrument **4500** create redundant electronic control pathways that enable operation of the powered surgical stapling and cutting instrument **4500** even as some of the inputs, switches, and/or sensors fail integrity checks. For example, as illustrated in FIG. **86**, triggering the limp mode **4686** requires detecting two separate and discrete failures, and triggering the stop mode **4688** requires detecting three separate and discrete failures. A single failure, however, only triggers the warning mode **4682**. In other words, the failure response system **4681** of the powered surgical stapling and cutting instrument **4500** is configured to escalate to a more secure mode of operation in response to an escalation in detected failures.

[0558] The failure response system **4681** can be implemented using integrated and/or discrete hardware elements, software elements, and/or a combination of both. Examples of integrated hardware elements may include processors, microprocessors, controllers, integrated circuits, application specific integrated circuits (ASIC), programmable logic devices (PLD), digital signal processors (DSP), field programmable gate arrays (FPGA), logic gates, registers, semiconductor devices, chips, microchips, chip sets, microcontroller, system-on-chip (SoC), and/or system-in-package (SIP). Examples of discrete hardware elements may include circuits and/or circuit elements (e.g., logic gates, field effect transistors, bipolar transistors, resistors, capacitors, inductors, relay and so forth). In other embodiments, one or more controllers of the present disclosure may include a hybrid circuit comprising discrete and integrated circuit elements or components on one or more substrates, for example.

[0559] In at least one instance, the failure response system **4681** can be implemented by a circuit including a controller that comprises one or more processors (e.g., microprocessor, microcontroller) coupled to at least one memory circuit. The at least one memory circuit stores machine executable instructions that when executed by the processor, cause the processor to execute machine instructions to implement one or more of the functions performed by the failure response system **4681**. The processor may be any one of a number of single or multi-core processors known in the art. The memory circuit may comprise volatile and non-volatile storage media. The processor may include an instruction processing unit and an arithmetic unit. The instruction processing unit may be configured to receive instructions from the one memory circuit.

[0560] In at least one aspect, the failure response system **4681** may comprise a finite state machine comprising a combinational logic circuit configured to implement one or more of the functions performed the failure response system **4681**. In one embodiment, a failure response system **4681** may comprise a finite state machine comprising a sequential logic circuit. The sequential logic circuit may comprise the combinational logic circuit and at least one memory circuit, for example. The at least one memory circuit can store a current state of the finite state machine. The sequential logic circuit or the combinational logic circuit can be configured to implement one or more of the functions performed by one or more controllers of the present disclosure such as, for example, the controller. In certain instances, the sequential logic circuit may be synchronous or asynchronous.

[0561] In at least one aspect, as illustrated in FIG. **86**, the failure response system **4681** is implemented, at least in part, using a number of logic gates. A logic circuit **4691** can be configured to deliver a binary input to an AND logic gate **4690** as to whether the readings of the linear position encoder **4640** correlate with the readings of the rotary position encoder **4641**. The second input of the AND gate **4690** is delivered through an OR logic gate **4692** which receives inputs from the beginning-of-stroke switch **4652** and the end-of-stroke switch **4662**. The OR logic gate **4692** delivers a high output to the AND logic gate **4690** if a failure of at least one of the beginning-of-stroke switch **4652** and the end-of-stroke switch **4662** is detected. The AND logic gate **4690** delivers a high output, which causes the limp

mode **4686** to be activated, if the logic circuit **4691** and the OR logic gate **4692** deliver high outputs to the AND logic gate **4690**.

[0562] Further to the above, a logic inverter or a NOT logic gate **4694** maintains the normal mode **4684** in the absence of a high output from the AND logic gate **4690**. An AND gate **4696** is responsible for causing the stop mode **4688** to be activated upon receiving a high output from the AND logic gate **4690** and a high output from a high output from a logic circuit **4698** configured to monitor current drawn by the motor **4514**. The logic circuit **4698** is configured to receive the readings of the sensor **4617**, which represent current drawn by the motor **4514**, and deliver a high output when such readings are beyond a predetermined normal range which indicates a sensor failure. An OR logic gate **4699** is configured to cause the warning mode **4682** to be activated upon receiving a high output from one of the logic circuit **4698** and the OR logic gate **4692**.

[0563] Referring to FIG. **87**, an alternative embodiment of a failure response system **4681'** is depicted. The failure response system **4681'** is similar in many respects to the failure response system **4681** and includes the normal mode **4684**, the limp mode **4686**, and the stop mode **4688**. The failure response system **4681'** includes the AND logic gate **4690**, the OR logic gate **4692**, and an AND logic gate **4674**. A logic circuit **4670**, which can be configured to implement a decision block, is configured to receive an input from the AND logic gate **4690**. The logic circuit **4670** is configured to activate the limp mode **4686** if the logic circuit **4670** receives positive input from the AND logic gate **4690**. However, if the logic circuit **4670** does not receive a positive input from the AND logic gate **4690**, the normal mode **4684** remains active.

[0564] Further to the above, the failure response system **4681'** includes a second logic circuit **4672**, which can be configured to implement a decision block. The second logic circuit **4672** is configured to receive an input from an AND logic gate **4674**. The AND logic gate **4674** delivers a positive output if the limp mode **4686** is active and the logic circuit **4698** determines that the readings of the sensor **4617**, which represent current drawn by the motor **4514**, are beyond a predetermined normal range. If, however, the AND logic gate **4674** does not deliver an output to the logic circuit **4672**, the limp mode **4686** remains active.

[0565] Referring to FIG. **88**, a failure response system **5001** is similar in many respects to the failure response system **4681**, and includes the limp mode **4686** and the stop mode **4688**. The failure response system **5001** is configured to transition the powered surgical stapling and cutting instrument **4500** from the limp mode **4686** to a stop mode **4688** if (i) the trigger-sensing control circuit **4627** determines that the readings of the firing-trigger Hall sensor **4629** and the verification-trigger Hall effect sensor **4631** do not correlate, and (ii)(a) the beginning-stroke-switch **4652** is in a closed configuration (FIG. **85**) or (ii)(b) the readings of the linear position encoder **4640** do not correlate with the readings of the rotary position encoder **4641**.

[0566] As illustrated in FIG. **88**, the failure response system **5001** includes an OR logic gate configured to receive a positive input **5008** if the readings of the linear position encoder **4640** do not correlate with the readings of the rotary position encoder **4641**. The OR logic gate **5004** is also configured to receive a positive input **5006** from the electrical circuit **4650** (FIG. **85**) if the beginning-stroke-switch **4652** is in a closed configuration. The failure response system **5001** further includes an AND logic gate **5010** configured to receive a positive input **5012** from the trigger-sensing control circuit **4627** if the trigger-sensing control circuit **4627** determines that the readings of the firing-trigger Hall sensor **4629** and the verification-trigger Hall effect sensor **4631** do not correlate. The OR logic gate **5004** is configured to deliver a positive input to the AND logic gate **5010** in response to receiving one of the inputs **5006** and **5008**.

[0567] The failure response system **5001** further includes a logic circuit **5002**, which is configured to implement a decision block. The logic circuit **5002** is configured to maintain a limp mode **4686** in the absence of a positive output of the AND logic gate **5010**. The logic circuit **5002** is further configured to transition from the limp mode **4686** to the stop mode **4688** in the presence of a positive output from the AND logic gate **5010**.

[0568] Referring to FIG. **89**, an alternative embodiment of a failure response system **5021** is depicted. The failure response system **5021** is similar in many respects to the failure response system **4681** and includes the normal mode **4684** and the stop mode **4688**. The failure response system **5021** is configured to maintain the powered surgical stapling and cutting instrument **4500** in the normal mode **4684** until three separate failures are detected, as described in greater detail below. Upon detecting such failures, the failure response system **5021** causes the stop mode **4688** to be activated.

[0569] Further to the above, the failure response system **5021** includes an AND logic gate **5024**, an OR logic gate **5026**, and an AND logic gate **5028**. A logic circuit **5022**, which can be configured to implement a decision block, is configured to receive an input from the AND logic gate **5024**. The logic circuit **5022** is configured to activate the stop mode **4688** if the logic circuit **5022** receives a positive input from the AND logic gate **5024**. However, if the logic circuit **5024** does not receive a positive input from the AND logic gate **5024**, the normal mode **4684** remains active.

[0570] As illustrated in FIG. **89**, the AND logic gate **5024** is coupled to the logic circuit **4691**, which is configured to deliver a binary input to an AND logic gate **5024** as to whether the readings of the linear position encoder **4640** correlate with the readings of the rotary position encoder **4641**. The second input of the AND gate **5024** is delivered through the AND logic gate **5026** which is which is coupled to the logic circuit **4698**. The logic circuit **4698** is configured to deliver a binary output to the AND logic gate **5026** as to whether the readings of the sensor **4617**, which represent current drawn by the motor **4514**, are beyond a predetermined normal range. The second input of the AND gate **5026** is delivered through an OR logic gate **5028** which receives inputs from the beginning-of-stroke switch **4652** and the end-of-stroke switch **4662**. The OR logic gate **5028** delivers a high output to the AND logic gate **4690** if a failure of at least one of the beginning-of-stroke switch **4652** and the end-of-stroke switch **4662** is detected.

[0571] Accordingly, the failure response system **5021** protects against malfunctions that are based on sensor and/or switch errors by requiring a plurality of sensor and/or switch errors to be detected before activating the stop mode **4688**. This ensures that a single point failure such as a failure of a sensor and/or a switch will not by itself render the powered surgical stapling and cutting instrument **4500** inoperable.

The failure response system **5021** requires a plurality of inputs to indicate failures prior to activating the stop mode **4688**. When one failure is reported such as, for example, a lack of correlation between the readings of the linear position encoder **4640** the readings of the rotary position encoder **4641**, the failure response system **5021** is configured to look for failures in other related or relevant inputs such as, for example, motor current inputs, inputs from the beginning-of-stroke switch **4652** and the end-of-stroke switch **4662**, before activating the stop mode **4688**.

[0572] In at least one instance, a first circuit and a second circuit are configured to separately assess or detect an operational parameter of a powered surgical stapling and cutting instrument **4500** such as, for example, an operational parameter in connection with the performance of a firing member during a firing stroke of the powered surgical stapling and cutting instrument **4500**. In at least one instance, the second circuit output can be used to verify and/or as a substitute, within a control loop of the firing stroke, for the output of the first circuit should the output of the first circuit be identified as erroneous.

[0573] For example, the primary processor **4702** can be configured to track a first operational parameter by assessing the current drawn by the motor **4514** during the firing stroke, and the safety processor **4704** can be configured to track a second operational parameter by assessing correlation between the rotational motion of the motor **4514** and the linear motion of the firing member during the firing stroke. Under normal operating conditions, the current drawn by the motor **4514** corresponds to the speed of the firing member and/or falls within a normal predetermined range. Also, under normal operating conditions, the rotational motion of the motor **4514** correlates with the linear motion of the firing member. Accordingly, the primary processor **4702** and the safety processor **4704** separately track separate operational parameters of the powered surgical stapling and cutting instrument **4500** that provide feedback as to the performance of the firing member within a control loop of the firing stroke.

[0574] The primary processor **4702** and/or the safety processor **4704** may be configured to generate outputs indicative of whether their respective operational parameters are within normal operating conditions. In one example, the output of the safety processor **4704** can be used to verify and/or as a substitute, within a control loop of the firing stroke, for the output of the primary processor **4702** should the assessment of operational parameter of the safety processor **4704** be identified as erroneous or indicative of abnormal operating conditions while the second operational parameter indicates normal operating conditions.

[0575] The outputs of the primary processor **4702** and/or the safety processor **4704** may comprise activating an operational mode of the powered surgical stapling and cutting instrument **4500** selected from a group comprising a normal mode, a warning mode, a limp mode, and a stop mode. In one example, the output of the primary processor **4702** may comprise activating a failure response mode such as, for example, a limp mode or a stop mode but if the output of the safety processor **4704** comprises activating/continuing a normal mode of operation, the normal mode is used as a substitute for the failure response mode. Accordingly, the powered surgical stapling and cutting instrument **4500** will continue to operate in normal mode in spite of the error identified based on the assessment of the operational parameter tracked by the primary processor **4702**.

[0576] In one example, a failure response system can be configured to activate a first failure response mode if a first error is detected, a second failure response mode if a second error is detected in addition to the first error, and a third failure response mode if a third error is detected in addition to the first and second errors. In at least one instances, a powered surgical stapling and cutting instrument **4500** remain operational in the first failure response mode and the second failure response mode, and is deactivated in the third failure response mode.

[0577] In one example, a failure response system can be configured to elevate or escalate a failure response to accommodate an escalation in detected failures. In one example, a failure response system is configured to transition from a first failure response mode to a second response failure response mode in response to an increase in detected errors, wherein the detected errors include at least one sensor failure and/or at least one switch failures. In one example, a failure response system is configured to activate transition from a first failure response mode to a second failure response mode in response to an increase in detected errors, wherein the detected errors include at least one measurement outside a predetermine normal range.

[0578] In one example, a failure response system is configured to activate a first failure response mode if a first error is detected and is configured to transition from the first failure response mode to a second failure response mode if a second error is detected in addition to the first error. In one example, a failure response system is configured to activate a first failure response mode if a first plurality of errors are detected and is configured to transition from the first failure response mode to a second failure response mode if a second plurality of errors are detected, wherein the second plurality of errors are greater than the first plurality of errors, and wherein the second plurality of errors encompasses the first plurality of errors. In one example, the second failure response mode involves a greater number of restrictions on operation of the powered surgical stapling and cutting instrument **4500** than the first failure response mode.

EXAMPLES

Example 1

[0579] A surgical instrument comprising an anvil and an elongate channel, wherein at least one of the anvil and the elongate channel is movable to capture tissue between the anvil and the elongate channel. The elongate channel comprises a plurality of first electrical contacts, and a plurality of electrical connectors. The plurality of electrical connectors further comprise a plurality of second electrical contacts, wherein the electrical connectors are spring-biased such that a gap is maintained between the first electrical contacts and the second electrical contacts. The surgical instrument also comprises a staple cartridge releasably attachable to the elongate channel. The staple cartridge comprises a cartridge body including a plurality of staple cavities and, in addition, a plurality of staples deployable from the staple cavities into the tissue. The staple cartridge also comprises a plurality of third electrical contacts, wherein the attachment of the staple cartridge to the elongate channel moves the electrical connectors which causes the

second electrical contacts to bridge the gap and become electrically coupled to the first electrical contacts.

Example 2

[0580] The surgical instrument of Example 1, wherein the staple cartridge comprises a storage medium configured to store information about the staple cartridge. The storage medium is accessible by the surgical instrument through at least one of the third electrical contacts when the cartridge body is attached to the elongate channel.

Example 3

[0581] The surgical instrument of Examples 1 or 2, wherein the storage medium comprises a memory unit.

Example 4

[0582] The surgical instrument of Examples 1, 2, or 3, wherein the information comprises an identifier of the staple cartridge.

Example 5

[0583] The surgical instrument of Examples 1, 2, 3, or 4, wherein the information further comprises a spent status of the staple cartridge.

Example 6

[0584] The surgical instrument of Examples 1, 2, 3, 4, or 5, wherein the electrical connectors are at least partially coated with a fluid-repellant coating.

Example 7

[0585] The surgical instrument of Examples 1, 2, 3, 4, 5, or 6, wherein the third electrical contacts are at least partially coated with a fluid-repellant coating.

Example 8

[0586] The surgical instrument of Examples 5, 6, or 7, wherein the connectors comprise wearing features configured to at least partially remove the fluid-repellant coating during attachment of the staple cartridge to the elongate channel.

Example 9

[0587] The surgical instrument of Example 8, wherein at least one of the wearing features comprises a raised-dome shape.

Example 10

[0588] The surgical instrument of Example 1, wherein the staple cartridge comprises a cartridge-status circuit portion comprising a trace element configured to be broken during deployment of the staples.

Example 11

[0589] The surgical instrument of Example 1, wherein the elongate channel comprises a compressible seal configured to resist fluid ingress between the staple cartridge and the elongate channel when the staple cartridge is attached to the elongate channel.

Example 12

[0590] A staple cartridge for use with an end effector of a surgical instrument, wherein the staple cartridge comprises a cartridge body releasably attachable to the end effector, and wherein the cartridge body comprises a plurality of staple cavities. The staple cartridge also comprises a plurality of staples at least partially stored in the staple cavities and, in addition, a camming member movable relative to the cartridge body from a starting position to cause staples to be deployed from the staple cavities. The staple cartridge further comprises an electrical circuit including a plurality of external electrical contacts configured to be electrically coupled to corresponding electrical contacts of the end effector when the cartridge body is attached to the end effector. The electrical circuit also comprises a storage medium configured to store information about the staple cartridge, wherein the storage medium is accessible through at least one of the external electrical contacts when the cartridge body is attached to the end effector. The electrical circuit further comprises a cartridge-status circuit portion including a trace element configured to be broken during movement of the camming member.

Example 13

[0591] The staple cartridge of Example 12, wherein the storage medium comprises a memory unit.

Example 14

[0592] The staple cartridge of Examples 12 or 13, wherein the information comprises an identifier of the staple cartridge.

Example 15

[0593] The staple cartridge of Examples 12, 13, or 14, wherein the information comprises a spent status of the staple cartridge.

Example 16

[0594] The staple cartridge of Example 12, wherein the external electrical connectors are at least partially coated with a fluid-repellant coating.

Example 17

[0595] A staple cartridge for use with an end effector of a surgical instrument, wherein the staple cartridge comprises a cartridge body releasably attachable to the end effector, and wherein the cartridge body comprises a plurality of staple cavities. The staple cartridge also comprises a plurality of staples at least partially stored in the staple cavities and, in addition, a sled movable relative to the cartridge body from a starting position to cause the staples to be deployed from the staple cavities during a firing stroke. The staple cartridge further comprises a detection means for determining a spent status of the staple cartridge and a storage medium configured to store a spent status of the staple cartridge.

Example 18

[0596] The staple cartridge of Example 17, wherein the detection means includes an electrical circuit configured to

be transitioned between a closed configuration and an open configuration by the sled during a firing stroke.

Example 19

[0597] The staple cartridge of Examples 17 or 18, wherein the detection means includes a Hall effect sensor.

Example 20

[0598] The staple cartridge of Examples 17, 18, or 19, wherein the detection means includes an electrical circuit comprising a conductive bridge configured to be severed during the firing stroke.

Example 21

[0599] A powered surgical stapling and cutting instrument, comprising a staple cartridge, wherein the staple cartridge comprises a housing, a plurality of staple cavities and, in addition, a plurality of staples deployable from the staple cavities during a firing stroke. The staple cartridge also comprises a firing member movable during a firing stroke to deploy staples from the staple cavities and a motor operably coupled to the firing member, wherein the motor is configured to generate at least one rotational motion to motivate the firing member to cause staples to be deployed from the staple cavities during a firing stroke. The powered surgical stapling and cutting instrument also comprises a failure response system comprising a first circuit configured to detect a first operational error of the powered surgical stapling and cutting instrument if the movement of the firing member and the rotational motion of the motor are beyond a predetermined correlation during the firing stroke. The failure response system also comprises a second circuit configured to detect a second operational error of the powered surgical stapling and cutting instrument if a failure is detected in at least one of a beginning-of-stroke switch and an end-of-stroke switch. The failure response system further comprises a control circuit configured to activate a first failure response mode if the first operational error is detected, wherein the control circuit is configured to activate a second failure response mode which is different than the first failure response mode if the second operational error is detected in addition to detection of the first operational error.

Example 22

[0600] The powered surgical stapling and cutting instrument of Example 21, wherein the first failure response mode is a warning mode.

Example 23

[0601] The powered surgical stapling and cutting instrument of Examples 21 or 22, wherein the second failure response mode is a limp mode.

Example 24

[0602] The powered surgical stapling and cutting instrument of Examples 21, 22, or 23, wherein the motor is run at a reduced speed in the limp mode.

Example 25

[0603] The powered surgical stapling and cutting instrument of Examples 21, 22, 23 or 24, wherein the firing member is moved at a reduced speed in the limp mode.

Example 26

[0604] The powered surgical stapling and cutting instrument of Example 21, further comprising a third circuit configured to detect a third operational error of the powered surgical stapling and cutting instrument if a current drawn by the motor during a firing stroke is beyond a predetermined range.

Example 27

[0605] The powered surgical stapling and cutting instrument of Example 26, wherein the control circuit is configured to activate a third failure response mode which is different than the first failure response mode and the second failure response mode if the third operational error is detected in addition to detection of the first operational error and the second operational error.

Example 28

[0606] The powered surgical stapling and cutting instrument of Example 27, wherein the third failure response mode is more restrictive than the second failure response mode.

Example 29

[0607] A powered surgical stapling and cutting instrument, comprising a staple cartridge wherein the staple cartridge comprises a housing, a plurality of staple cavities and, in addition, a plurality of staples deployable from the staple cavities during a firing stroke. The staple cartridge also comprises a firing member movable during a firing stroke to cause staples to be deployed from the staple cavities, and a motor operably coupled to the firing member, wherein the motor is configured to generate at least one rotational motion to motivate the firing member to cause staples to be deployed from the staple cavities during a firing stroke. The powered surgical stapling and cutting instrument further comprises a failure response system which comprises a first circuit configured to detect a first operational error of the powered surgical stapling and cutting instrument if movement of the firing member and the rotational motion of the motor are beyond a predetermined correlation during a firing stroke. The failure response system also comprises a second circuit configured to detect a second operational error of the powered surgical stapling and cutting instrument if a failure is detected in at least one of a beginning-of-stroke switch and an end-of-stroke switch. The failure response system further comprises a controller which includes a memory and a storage medium comprising program instructions which, when executed by the processor, cause the processor to activate a first failure response mode if the first operational error is detected, and also cause the processor to activate a second failure response mode which is different than the first failure response mode if the second operational error is detected in addition to detection of the first operational error.

Example 30

[0608] The powered surgical stapling and cutting instrument of Example 29, wherein the first failure response mode is a warning mode.

Example 31

[0609] The powered surgical stapling and cutting instrument of Examples 29 or 30, wherein the second failure response mode is a limp mode.

Example 32

[0610] The powered surgical stapling and cutting instrument of Examples 29, 30, or 31, wherein the motor is run at a reduced speed in the limp mode.

Example 33

[0611] The powered surgical stapling and cutting instrument of Examples 29, 30, 31, or 32, wherein the firing member is moved at a reduced speed in the limp mode.

Example 34

[0612] The powered surgical stapling and cutting instrument of Example 29, further comprising a third circuit configured to detect a third operational error of the powered surgical stapling and cutting instrument if a current drawn by the motor during a firing stroke is beyond a predetermined range.

Example 35

[0613] The powered surgical stapling and cutting instrument of Example 29, wherein the storage medium comprises program instructions which, when executed by the processor, cause the processor to activate a third failure response mode which is different than the first failure response mode and the second failure response mode if the third operational error is detected in addition to detection of the first operational error and the second operational error.

Example 36

[0614] The powered surgical stapling and cutting instrument of Example 35, wherein the third failure response mode is more restrictive than the second failure response mode.

Example 37

[0615] A failure response system for use with a powered surgical stapling and cutting instrument configured to deploy a plurality of staples into tissue during a firing stroke, wherein the failure response system comprises a first circuit configured to detect a first operational error of the powered surgical stapling and cutting instrument during a firing stroke, and a second circuit configured to detect a second operational error of the powered surgical stapling and cutting instrument during a firing stroke, wherein the second operational error is different than the first operational error. The failure response system also comprises a third circuit configured to detect a third operational error of the powered surgical stapling and cutting instrument during a firing stroke, wherein the third operational error is different than the first operational error and the second operational error. The failure response system further comprises a control circuit configured to activate a first failure response mode if the first operational error is detected, wherein the control circuit is configured to activate a second failure response mode, which is different than the first failure response mode if the second operational error is detected in addition to detection of the first operational error. The control circuit is configured to activate a third failure response mode which is different than the first failure response mode and the second failure response mode if the third operational error is detected in addition to detection of the first operational error and the second operational error.

Example 38

[0616] The failure response system of Example 37, wherein the first failure response mode is a warning mode.

Example 39

[0617] The failure response system of Examples 37 or 38, wherein the second failure response mode is a limp mode.

Example 40

[0618] The failure response system of Examples 37, 38, or 39, wherein the third failure response mode is more restrictive than the second failure response mode.

Example 41

[0619] A powered surgical stapling and cutting instrument comprising, a staple cartridge comprising a housing, a plurality of staple cavities, and, in addition, a plurality of staples deployable from the staple cavities during a firing stroke. The staple cartridge also comprises a firing member movable during a firing stroke to cause staples to be deployed from the staple cavities, and a motor operably coupled to the firing member. The motor is configured to generate at least one rotational motion to motivate the firing member to cause the staples to be deployed from the staple cavities during the firing stroke. The powered surgical stapling and cutting instrument also comprises a primary controller comprising a primary processor and a primary storage medium storing first program instructions which, when executed by the primary processor, cause the primary processor to determine a first acceleration of the firing member during a firing stroke and compare the first acceleration to a predetermined threshold acceleration. The powered surgical stapling and cutting instrument further comprises a secondary controller including a secondary processor and a secondary storage medium storing second program instructions which, when executed by the secondary processor, cause the secondary processor to determine a second acceleration of the firing member during a firing stroke and to compare the second acceleration to the predetermined threshold value.

Example 42

[0620] The powered surgical stapling and cutting instrument of Example 41, wherein the first acceleration is determined based on a distance between a first position and a second position, wherein the distance is traveled by the firing member during a firing stroke.

Example 43

[0621] The powered surgical stapling and cutting instrument of Examples 41 or 42, further comprising a sensor configured to detect the firing member at the second position.

Example 44

[0622] The powered surgical stapling and cutting instrument of Example 43, wherein the sensor is a linear position encoder.

Example 45

[0623] The powered surgical stapling and cutting instrument of Examples 43 or 44, wherein the sensor is in electrical communication with the primary processor.

Example 46

[0624] The powered surgical stapling and cutting instrument of Examples 41, 42, 43, 44, or 45, wherein the second acceleration is separately determined by the secondary processor based on the distance.

Example 47

[0625] The powered surgical stapling and cutting instrument of Examples 41, 42, 43, 44, 45, or 46, further comprising another sensor configured to detect the firing member at the second position.

Example 48

[0626] The powered surgical stapling and cutting instrument of Example 47, wherein the other sensor is a linear position encoder.

Example 49

[0627] The powered surgical stapling and cutting instrument of Examples 47 or 48, wherein the other sensor is in electrical communication with the secondary processor.

Example 50

[0628] The powered surgical stapling and cutting instrument of Examples 41, 42, 43, 44, 45, 46, 47, 48, or 49, wherein the primary processor is configured to activate a failure response mode if (i) the first acceleration is beyond the predetermined threshold value and (ii) the second acceleration is beyond the predetermined threshold value.

Example 51

[0629] The powered surgical stapling and cutting instrument of Examples 41, 42, 43, 44, 45, 46, 47, 48, 49, or 50, wherein the failure response mode comprises stopping the motor.

Example 52

[0630] The powered surgical stapling and cutting instrument of Examples 41, 42, 43, 44, 45, 46, 47, or 48, wherein the primary processor is configured to activate a failure response mode if at least one of the first acceleration and the second acceleration is beyond the predetermined threshold value.

Example 53

[0631] The powered surgical stapling and cutting instrument of Example 52, wherein the failure response mode comprises stopping the motor.

Example 54

[0632] The powered surgical stapling and cutting instrument of Example 41, wherein the second program instructions further cause the secondary processor to generate an output based on the comparison of the second acceleration to the predetermined threshold value and cause the output to be communicated to the primary controller.

Example 55

[0633] A powered surgical stapling and cutting instrument comprising a staple cartridge comprising a housing, a plurality of staple cavities, and in addition, a plurality of staples deployable from the staple cavities during a firing stroke. The powered surgical stapling and cutting instrument also comprises a firing member movable during a firing stroke to cause the staples to be deployed from the staple cavities, and a motor operably coupled to the firing member. The motor is configured to generate at least one rotational motion to motivate the firing member to deploy staples from the staple cavities during a firing stroke. The powered surgical stapling and cutting instrument further comprises a primary circuit including a primary processor configured to assess a first operational parameter indicative of performance of the firing member during a firing stroke and generate a first output based on the assessment of the first operational parameter. The powered surgical stapling and cutting instrument further comprises a second circuit including a safety processor configured to assess a second operational parameter indicative of the performance of the firing member during a firing stroke, wherein the second operational parameter is different than the first operational parameter and to generate a second output based on the assessment of the second operational parameter, wherein the second output is used to verify the first output within a control loop of a firing stroke.

Example 56

[0634] The powered surgical stapling and cutting instrument of Example 55, wherein the second output is used as a substitute for the first output if it is determined that the first operational parameter indicates an abnormal performance of the firing member during a firing stroke while the second operational parameter indicates a normal performance of the firing member.

Example 57

[0635] The powered surgical stapling and cutting instrument of Example 55, wherein the first output is configured to activate a mode of operation selected from a group comprising a normal mode, a warning mode, a limp mode, and a stop mode.

Example 58

[0636] The powered surgical stapling and cutting instrument of Examples 55 or 57, wherein the second output is configured to activate a mode of operation selected from a group comprising a normal mode, a warning mode, a limp mode, and a stop mode.

Example 59

[0637] The powered surgical stapling and cutting instrument of Example 55, wherein the first output is communicated to the safety processor in a message comprising the first output and a security code.

Example 60

[0638] The powered surgical stapling and cutting instrument of Example 59, wherein the security code comprises a cyclic redundancy check (CRC).

[0639] Many of the surgical instrument systems described herein are motivated by an electric motor; however, the surgical instrument systems described herein can be motivated in any suitable manner. In various instances, the surgical instrument systems described herein can be motivated by a manually-operated trigger, for example. In certain instances, the motors disclosed herein may comprise a portion or portions of a robotically controlled system. Moreover, any of the end effectors and/or tool assemblies disclosed herein can be utilized with a robotic surgical instrument system. U.S. patent application Ser. No. 13/118,241, entitled SURGICAL STAPLING INSTRUMENTS WITH ROTATABLE STAPLE DEPLOYMENT ARRANGEMENTS, now U.S. Pat. No. 9,072,535, for example, discloses several examples of a robotic surgical instrument system in greater detail.

[0640] The surgical instrument systems described herein have been described in connection with the deployment and deformation of staples; however, the embodiments described herein are not so limited. Various embodiments are envisioned which deploy fasteners other than staples, such as clamps or tacks, for example. Moreover, various embodiments are envisioned which utilize any suitable means for sealing tissue. For instance, an end effector in accordance with various embodiments can comprise electrodes configured to heat and seal the tissue. Also, for instance, an end effector in accordance with certain embodiments can apply vibrational energy to seal the tissue.

[0641] The entire disclosures of:

[0642] U.S. Pat. No. 5,403,312, entitled ELECTROSURGICAL HEMOSTATIC DEVICE, which issued on Apr. 4, 1995;

[0643] U.S. Pat. No. 7,000,818, entitled SURGICAL STAPLING INSTRUMENT HAVING SEPARATE DISTINCT CLOSING AND FIRING SYSTEMS, which issued on Feb. 21, 2006;

[0644] U.S. Pat. No. 7,422,139, entitled MOTOR-DRIVEN SURGICAL CUTTING AND FASTENING INSTRUMENT WITH TACTILE POSITION FEEDBACK, which issued on Sep. 9, 2008;

[0645] U.S. Pat. No. 7,464,849, entitled ELECTRO-MECHANICAL SURGICAL INSTRUMENT WITH CLOSURE SYSTEM AND ANVIL ALIGNMENT COMPONENTS, which issued on Dec. 16, 2008;

[0646] U.S. Pat. No. 7,670,334, entitled SURGICAL INSTRUMENT HAVING AN ARTICULATING END EFFECTOR, which issued on Mar. 2, 2010;

[0647] U.S. Pat. No. 7,753,245, entitled SURGICAL STAPLING INSTRUMENTS, which issued on Jul. 13, 2010;

[0648] U.S. Pat. No. 8,393,514, entitled SELECTIVELY ORIENTABLE IMPLANTABLE FASTENER CARTRIDGE, which issued on Mar. 12, 2013;

[0649] U.S. patent application Ser. No. 11/343,803, entitled SURGICAL INSTRUMENT HAVING RECORDING CAPABILITIES; now U.S. Pat. No. 7,845,537;

[0650] U.S. patent application Ser. No. 12/031,573, entitled SURGICAL CUTTING AND FASTENING INSTRUMENT HAVING RF ELECTRODES, filed Feb. 14, 2008;

[0651] U.S. patent application Ser. No. 12/031,873, entitled END EFFECTORS FOR A SURGICAL CUTTING AND STAPLING INSTRUMENT, filed Feb. 15, 2008, now U.S. Pat. No. 7,980,443;

[0652] U.S. patent application Ser. No. 12/235,782, entitled MOTOR-DRIVEN SURGICAL CUTTING INSTRUMENT, now U.S. Pat. No. 8,210,411;

[0653] U.S. patent application Ser. No. 12/249,117, entitled POWERED SURGICAL CUTTING AND STAPLING APPARATUS WITH MANUALLY RETRACTABLE FIRING SYSTEM, now U.S. Pat. No. 8,608,045;

[0654] U.S. patent application Ser. No. 12/647,100, entitled MOTOR-DRIVEN SURGICAL CUTTING INSTRUMENT WITH ELECTRIC ACTUATOR DIRECTIONAL CONTROL ASSEMBLY, filed Dec. 24, 2009; now U.S. Pat. No. 8,220,688;

[0655] U.S. patent application Ser. No. 12/893,461, entitled STAPLE CARTRIDGE, filed Sep. 29, 2012, now U.S. Pat. No. 8,733,613;

[0656] U.S. patent application Ser. No. 13/036,647, entitled SURGICAL STAPLING INSTRUMENT, filed Feb. 28, 2011, now U.S. Pat. No. 8,561,870;

[0657] U.S. patent application Ser. No. 13/118,241, entitled SURGICAL STAPLING INSTRUMENTS WITH ROTATABLE STAPLE DEPLOYMENT ARRANGEMENTS, now U.S. Pat. No. 9,072,535;

[0658] U.S. patent application Ser. No. 13/524,049, entitled ARTICULATABLE SURGICAL INSTRUMENT COMPRISING A FIRING DRIVE, filed on Jun. 15, 2012; now U.S. Pat. No. 9,101,358;

[0659] U.S. patent application Ser. No. 13/800,025, entitled STAPLE CARTRIDGE TISSUE THICKNESS SENSOR SYSTEM, filed on Mar. 13, 2013, now U.S. Pat. No. 9,345,481;

[0660] U.S. patent application Ser. No. 13/800,067, entitled STAPLE CARTRIDGE TISSUE THICKNESS SENSOR SYSTEM, filed on Mar. 13, 2013, now U.S. Patent Application Publication No. 2014/0263552;

[0661] U.S. Patent Application Publication No. 2007/0175955, entitled SURGICAL CUTTING AND FASTENING INSTRUMENT WITH CLOSURE TRIGGER LOCKING MECHANISM, filed Jan. 31, 2006; and

[0662] U.S. Patent Application Publication No. 2010/0264194, entitled SURGICAL STAPLING INSTRUMENT WITH AN ARTICULATABLE END EFFECTOR, filed Apr. 22, 2010, now U.S. Pat. No. 8,308,040, are hereby incorporated by reference herein.

[0663] Although various devices have been described herein in connection with certain embodiments, modifications and variations to those embodiments may be implemented. Particular features, structures, or characteristics may be combined in any suitable manner in one or more embodiments. Thus, the particular features, structures, or characteristics illustrated or described in connection with

one embodiment may be combined in whole or in part, with the features, structures or characteristics of one ore more other embodiments without limitation. Also, where materials are disclosed for certain components, other materials may be used. Furthermore, according to various embodiments, a single component may be replaced by multiple components, and multiple components may be replaced by a single component, to perform a given function or functions. The foregoing description and following claims are intended to cover all such modification and variations.

[0664] The devices disclosed herein can be designed to be disposed of after a single use, or they can be designed to be used multiple times. In either case, however, a device can be reconditioned for reuse after at least one use. Reconditioning can include any combination of the steps including, but not limited to, the disassembly of the device, followed by cleaning or replacement of particular pieces of the device, and subsequent reassembly of the device. In particular, a reconditioning facility and/or surgical team can disassemble a device and, after cleaning and/or replacing particular parts of the device, the device can be reassembled for subsequent use. Those skilled in the art will appreciate that reconditioning of a device can utilize a variety of techniques for disassembly, cleaning/replacement, and reassembly. Use of such techniques, and the resulting reconditioned device, are all within the scope of the present application.

[0665] The devices disclosed herein may be processed before surgery. First, a new or used instrument may be obtained and, when necessary, cleaned. The instrument may then be sterilized. In one sterilization technique, the instrument is placed in a closed and sealed container, such as a plastic or TYVEK bag. The container and instrument may then be placed in a field of radiation that can penetrate the container, such as gamma radiation, x-rays, and/or high-energy electrons. The radiation may kill bacteria on the instrument and in the container. The sterilized instrument may then be stored in the sterile container. The sealed container may keep the instrument sterile until it is opened in a medical facility. A device may also be sterilized using any other technique known in the art, including but not limited to beta radiation, gamma radiation, ethylene oxide, plasma peroxide, and/or steam.

[0666] While this invention has been described as having exemplary designs, the present invention may be further modified within the spirit and scope of the disclosure. This application is therefore intended to cover any variations, uses, or adaptations of the invention using its general principles.

[0667] Any patent, publication, or other disclosure material, in whole or in part, that is said to be incorporated by reference herein is incorporated herein only to the extent that the incorporated materials do not conflict with existing definitions, statements, or other disclosure material set forth in this disclosure. As such, and to the extent necessary, the disclosure as explicitly set forth herein supersedes any conflicting material incorporated herein by reference. Any material, or portion thereof, that is said to be incorporated by reference herein, but which conflicts with existing definitions, statements, or other disclosure material set forth herein will only be incorporated to the extent that no conflict arises between that incorporated material and the existing disclosure material.

What is claimed is:

1. A surgical instrument, comprising:

an anvil;

an elongate channel, wherein at least one of said anvil and said elongate channel is movable to capture tissue between said anvil and said elongate channel, wherein said elongate channel comprises:

a plurality of first electrical contacts; and

a plurality of electrical connectors comprising a plurality of second electrical contacts, wherein said electrical connectors are spring-biased such that a gap is maintained between said first electrical contacts and said second electrical contacts; and

a staple cartridge releasably attachable to said elongate channel, and wherein said staple cartridge comprises:

a cartridge body comprising a plurality of staple cavities;

a plurality of staples deployable from said staple cavities into the tissue; and

a plurality of third electrical contacts, wherein said attachment of said staple cartridge to said elongate channel moves said electrical connectors causing said second electrical contacts to bridge said gap and become electrically coupled to said first electrical contacts.

2. The surgical instrument of claim **1**, wherein said staple cartridge comprises a storage medium configured to store information about said staple cartridge, and wherein said storage medium is accessible by said surgical instrument through at least one of said third electrical contacts when said cartridge body is attached to said elongate channel.

3. The surgical instrument of claim **2**, wherein said storage medium comprises a memory unit.

4. The surgical instrument of claim **2**, wherein said information comprises an identifier of said staple cartridge.

5. The surgical instrument of claim **2**, wherein said information comprises a spent status of said staple cartridge.

6. The surgical instrument of claim **1**, wherein said electrical connectors are at least partially coated with a fluid-repellant coating.

7. The surgical instrument of claim **1**, wherein said third electrical contacts are at least partially coated with a fluid-repellant coating.

8. The surgical instrument of claim **7**, wherein said connectors comprise wearing features configured to at least partially remove said fluid-repellant coating during attachment of said staple cartridge to said elongate channel.

9. The surgical instrument of claim **8**, wherein at least one of said wearing features comprises a raised-dome shape.

10. The surgical instrument of claim **1**, wherein said staple cartridge comprises a cartridge-status circuit portion comprising a trace element configured to be broken during said deployment of said staples.

11. The surgical instrument of claim **1**, wherein said elongate channel comprises a compressible seal configured to resist fluid ingress between said staple cartridge and said elongate channel when said staple cartridge is attached to said elongate channel.

12. A staple cartridge for use with an end effector of a surgical instrument, wherein the staple cartridge comprises:

a cartridge body releasably attachable to the end effector, wherein said cartridge body comprises a plurality of staple cavities;

a plurality of staples at least partially stored in said staple cavities;

a camming member movable relative to said cartridge body from a starting position to cause said staples to be deployed from said staple cavities; and

an electrical circuit, comprising:

a plurality of external electrical contacts configured to be electrically coupled to corresponding electrical contacts of the end effector when said cartridge body is attached to the end effector;

a storage medium configured to store information about said staple cartridge, wherein said storage medium is accessible through at least one of said external electrical contacts when said cartridge body is attached to the end effector; and

a cartridge-status circuit portion comprising a trace element configured to be broken during said movement of said camming member.

13. The staple cartridge of claim **12**, wherein said storage medium comprises a memory unit.

14. The staple cartridge of claim **12**, wherein said information comprises an identifier of said staple cartridge.

15. The staple cartridge of claim **12**, wherein said information comprises a spent status of said staple cartridge.

16. The staple cartridge of claim **12**, wherein said external electrical connectors are at least partially coated with a fluid-repellant coating.

17. A staple cartridge for use with an end effector of a surgical instrument, wherein the staple cartridge comprises:

a cartridge body releasably attachable to the end effector, wherein said cartridge body comprises a plurality of staple cavities;

a plurality of staples at least partially stored in said staple cavities;

a sled movable relative to said cartridge body from a starting position to cause said staples to be deployed from said staple cavities during a firing stroke;

a detection means for determining a spent status of said staple cartridge; and

a storage medium configured to store said spent status of said staple cartridge.

18. The staple cartridge of claim **17**, wherein said detection means includes an electrical circuit configured to be transitioned between a closed configuration and an open configuration by said sled during said firing stroke.

19. The staple cartridge of claim **17**, wherein said detection means includes a Hall effect sensor.

20. The staple cartridge of claim **17**, wherein said detection means includes an electrical circuit comprising a conductive bridge configured to be severed during said firing stroke.

* * * * *