Feb. 29, 1944. L. FICHTER ET AL 2,342,851

TUNING MECHANISM

Filed May 19, 1941 2 Sheets-Sheet 1

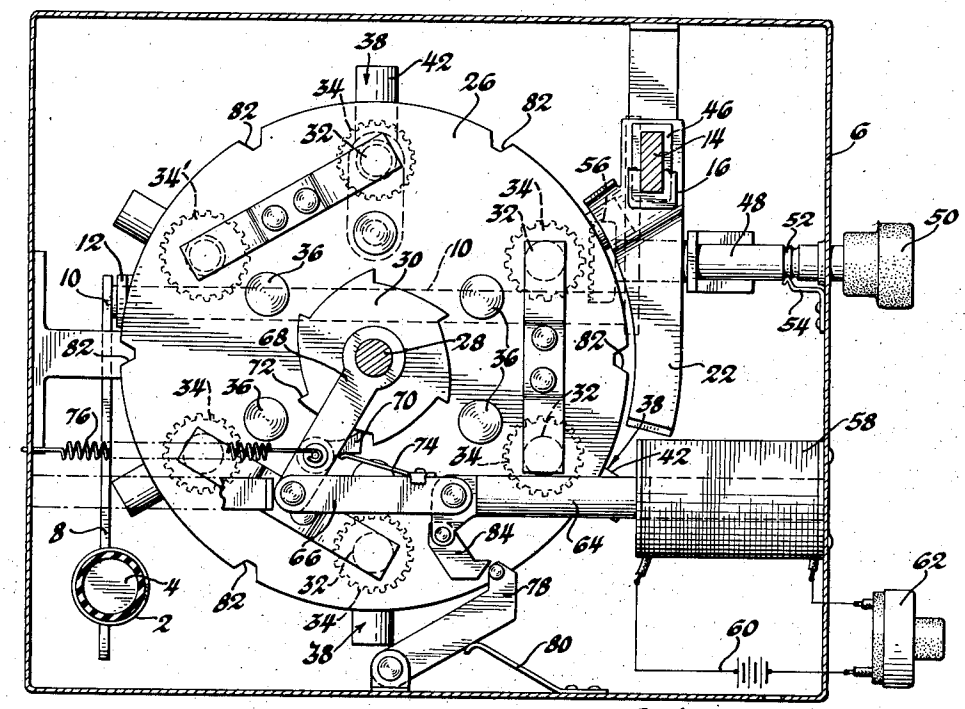

Fig. 1

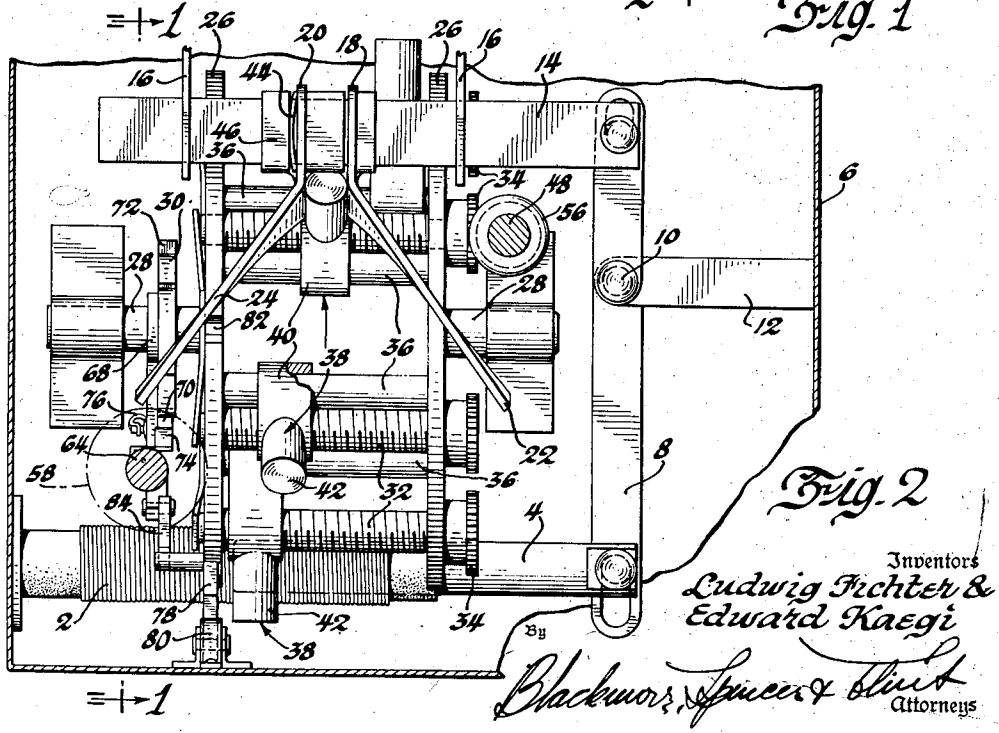

Fig. 2

Inventors
Ludwig Fichter &
Edward Kaegi

By Blackwood, Spencer & Blunt
Attorneys

Feb. 29, 1944. L. FICHTER ET AL 2,342,851

TUNING MECHANISM

Filed May 19, 1941 2 Sheets-Sheet 2

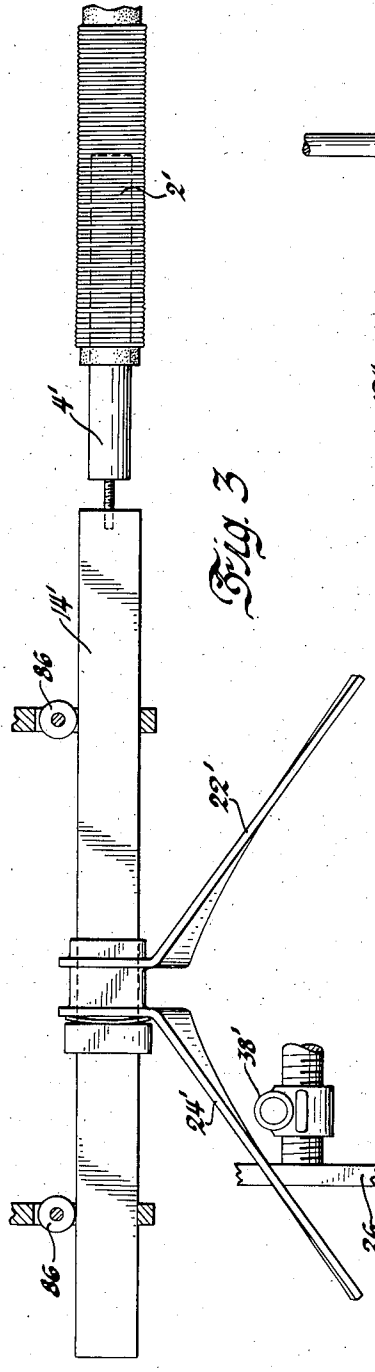


Fig. 3

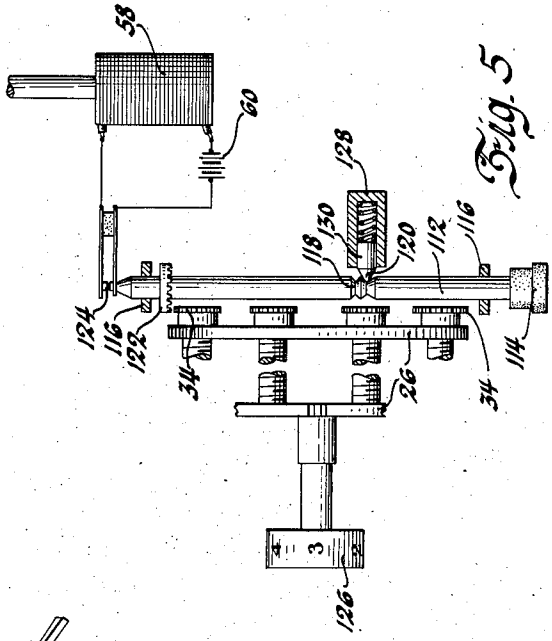


Fig. 5

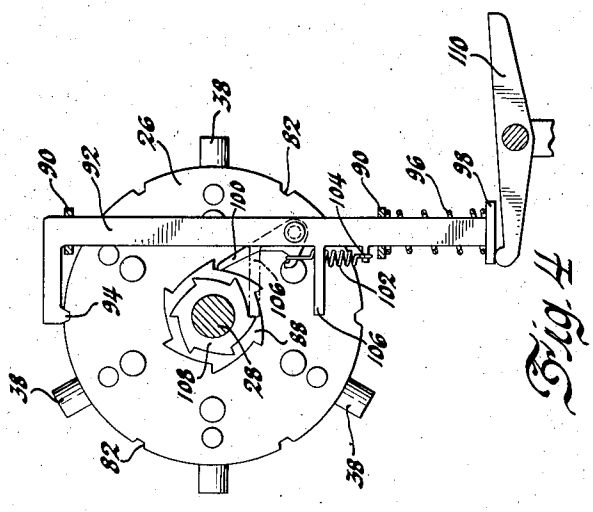


Fig. 4

Inventors
Ludwig Fichter &
Edward Kaegi

By Blackmore, Spencer & Flint
Attorneys

Patented Feb. 29, 1944

2,342,851

# UNITED STATES PATENT OFFICE

2,342,851

## TUNING MECHANISM

Ludwig Fichter and Edward Kaegi, Kokomo, Ind., assignors to General Motors Corporation, Detroit, Mich., a corporation of Delaware

Application May 19, 1941, Serial No. 394,071

7 Claims. (Cl. 74—10)

This application refers to automatic indexing mechanism and more particularly to mechanism used for tuning a radio receiver to certain predetermined stations.

It has recently become very popular to provide with the commercial radio receiver buttons or levers, as the case may be, which are merely forced into a predetermined position and by such action the receiver is tuned to a certain set station. There are, of course, only a few stations from which a listener ordinarily receives programs and most of these are usually local stations. Therefore, by supplying four or five of these so-called "push-button" assemblies, the user is enabled to obtain, by merely pressing on one of the buttons, his favorite station.

It is also necessary to provide some means for altering the set-up station as the owner may desire to change his station set-ups from time to time.

It is therefore an object of our invention to provide an automatic tuning device for indexing a radio receiver.

It is a further object of our invention to provide a simple and rugged mechanism for indexing a radio receiver.

It is a still further object of our invention to provide an automatic tuning device that can easily be adjusted to other settings.

With these and other objects in view, the embodiments of our invention will be best understood by reference to the following specification and claims and the illustrations in the accompanying drawings, in which:

Figure 1 is a vertical sectional view of a device embodying our invention, taken on line 1—1 of Figure 2;

Figure 2 is a sectional view taken on line 2—2 of Figure 1;

Figure 3 is a view of a modified form of our invention, showing only parts of the construction;

Figure 4 shows a modified form of operating the ratchet means of our invention; and

Figure 5 shows a modified form of manually adjusting the tuning mechanism.

Referring now more specifically to Figure 1, there is disclosed schematically a coil 2 which is intended to be one of the coils of a radio receiver, the inductance of which it is desired to alter in order to change the tuning of the receiver. There will, of course, be a plurality of these coils into which their associated cores such as 4 will be adjustably positioned to tune the entire receiver, only one, however, being here shown as an example. In order to tune the receiver therefore to different stations, the cores 4 are placed at different positions with respect to their associated coils and in order to place these at certain desired points the following apparatus is provided.

A casing 6 surrounds and supports the tuning mechanism, as well as the coil and core assemblies. As shown here for illustrative purposes, the core 4 which is moved with respect to the coil is adjustably pivoted to one end of a lever 8. This lever is pivoted at 10 to a rigid bar 12 fastened to the housing 6. There is pivotally connected to the opposite end of the lever 8 a transverse bar 14 and it will thus be evident that any longitudinal movement of this bar 14 will cause the lever 8 to pivot and move the core 4 in and out of its associated coil. The bar 14 is supported by any suitable means such as the two arms 16 which have openings therethrough so that the bar may be slid back and forth longitudinally.

Mounted on the bar are a pair of horns 18 and 20, the forwardly projecting portions of which extend in divergent directions to form a V between the two. This assembly is clamped securely to the bar 14 by any desired means so that any force applied to the arms of the horns will cause the bar 14 to move longitudinally. The spread between the two arms 22 and 24 is substantial and the purpose of this will be evident as the description proceeds.

Mounted adjacent the construction already described is a large pivoted drum, the ends of which are formed of two circular plates 26, each of which has projecting from the outer face thereof a stub shaft 28 which is trunnioned in suitable supporting means in the casing 6. One of the stub shafts 28 has secured thereto a ratchet wheel 30 and is therefore adapted to cause rotation of the drum assembly as the ratchet wheel is rotated by suitable means. Uniformly spaced at points around the periphery of each of the plates there are rotatably supported a series of threaded shafts 32 which are trunnioned in openings in the discs 26 and extend the full distance between the same. Applied to one end of each there is a small spur gear 34, the rotation of which will cause the threaded shafts to rotate. Adjacent each of the threaded shafts is a stationary shaft 36 which also extends between the two plates 26 and is rigidly secured to each. This strengthens the assembly and at the same time acts as a stop for a traveling nut assembly 38 which is applied

to each threaded shaft and adapted to be adjusted across the axis of the drum.

Each of these traveling nut assemblies 38 has a projecting portion such as 40 which contacts with the shafts 36 to prevent the rotation of the traveling nut assembly about the axis of the threaded shaft, but allow axial movement therealong. It will thus be evident that as the gears 34 are caused to rotate, the traveling nut assemblies 38 will move back and forth across the threaded shaft to a certain desired setting. Each traveling nut assembly 38 is brought to a cylindrical stub section 42 which is adapted to lie between the projecting arms 22 and 24 of the yoke member at certain positions. There are here shown six of these threaded shafts 32 supported adjacent the periphery of the drum and these correspond, of course, to six settings so that the receiver may have a plurality of predetermined stations to which it may be tuned. The yoke arms 22 and 24 lie adjacent the periphery of the drum at one point of its periphery and in such a manner that as the projecting stud portions 42 of the traveling nut assemblies 38 approach them, they will be contacted by one stud at a time and moved longitudinally, depending upon the setting of the traveling nut assembly, until the stud enters the throat of the yoke. Thereafter the stud 42 will be allowed to pass through the arms inasmuch as it can pass under the bar 14 and the assembly will be ready to receive the next stud 42 as the drum rotates. In order to allow the stud to give an accurate indexing and still allow the same to pass through between the arms 22 and 24 during the following operation as the next approaches, there is provided means whereby the yoke member 20 may be moved slightly to one side and this is possible due to the insertion of a flat spring 44 between the arm and a stationary block 46 on the bar 14.

Projecting inwardly from the case 6 and at right angles to the drum there is trunnioned a short shaft 48 on the outer end of which there is provided a suitable manual knob 50 for rotating the same. This shaft has a plurality of peripheral grooves 52 therein which cooperate with a snap spring 54 also carried by the casing whereby the shaft may assume different axial positions with respect to the casing and still be rotated. On the inner end of this shaft 48 there is carried a gear 56 which is adapted to cooperate with the gears 34 on the ends of the threaded shafts. When the shaft 48 is in its outermost position, or that shown in Figure 1, the gears will not mesh, but the drum may be rotated freely and the yoke indexed to predetermined stations. However, if it is desired to reset any of the stations, the shaft 48 may be pressed inwardly, snapping the spring 54 into the outermost groove which places the gear 56 in engagement with whatever gear 34 happens to be in indexing position. Then, by rotating the manual knob 50, the gears 56 and 34 will mesh and rotate and the traveling nut assembly 38 on that particular threaded shaft will be caused to be moved back and forth, which action will cause the bar 14 to slide and the set to be tuned. When the tuning point has been obtained, the manual button 50 may be retracted to pull the shaft 48 back to the position shown.

It will be noted that one of the gears 34' is larger in diameter than the remaining gears 34 and is so designed that it will mesh with the manually operated gear whenever it is in indexing position without the necessity of forcing the manual shaft 48 inward. Thus when the operator wishes to manually tune the set, he may press the button 62 a requisite number of times until the manual shaft is in indexing position and then tune through rotation of the manual knob 50.

While any desired means may be used for rotating the drum assemblies to bring the different traveling nut assemblies 38 into a position to force the yoke arms 22 and 24 to an indexed position, we have here shown merely as illustrative the actuation of such drum rotation by an electromagnet. This magnet 58 is secured to the casing 6 and has connected thereto a source of power or battery 60 and also a manually operated push button 62. The armature 64 of said magnet is connected to a pivoted link system 66 and 68, the latter link being pivoted to the center shaft 28 of the drum. There is also pivoted upon this link a small pawl 70 which is adapted to engage with the notches 72 on the ratchet wheel 30. The link 66 also carries a leaf spring 74 to force the pawl against the side of the ratchet wheel 30. A tension spring 76 is connected between the link 68 and the casing and normally biases the assembly to a position in which the armature 64 is withdrawn from the electromagnet. Therefore the energization of the latter causes the armature to be pulled downward or inward and the pawl 70 will then engage the notch 72 to cause the drum to be rotated one-sixth of a revolution or the distance between two of the threaded shafts, depending upon how many are provided.

It will thus be obvious that with each energization of the electromagnet 58 the drum will be rotated a certain predetermined arcuate distance which will bring the stud portion 42 of one of the traveling nut assemblies between the Y arms 22 and 24. As this portion rides against the Y arm, the latter will be forced to one side or the other, depending upon the location of the traveling nut, which action will cause the bar 14 to move longitudinally one way or the other and when the stud reaches the throat of the yoke, which will be the end of travel for that particular actuation, the bar 14 will be set in a definite position. This position transmitted by the lever 8 to the tuning mechanism will set that for a predetermined station. Upon the next actuation of course the stud in position will pass through the Y and the whole process will be repeated and the bar 14 set to a new position. Therefore, as the push button 62 is actuated the tuner will rotate one position and bring the receiver to the next preset station, and the stations are brought in sequence as the button is operated and as the drum is rotated. Upon one complete rotation of the drum, all of the preset stations will be tuned in, one after the other, and also the manual tuning location and any further actuation of the button 62 will start again on the same sequence.

If it is desired to reset or adjust any of the traveling nut assemblies to a different position, the manual knob 50 can be depressed to adjust the traveling nut associated with the particular threaded shaft in juxtaposition to the yoke member at that moment. There is also provided to prevent chatter or movement of the drum once it has been indexed an indexing or locking pawl 78 which is pivoted to the casing and which is spring-biased toward the edge of one of the drum discs 26 by a leaf spring 80. The drum disc has notches 82 in its periphery into which the end of the pawl is adapted to be depressed when an indexing position has been reached. In order to

project the locking or indexing pawl 78 from its associated notch 82, there is provided a short pivoted arm 84 connected to the armature 64 in juxtaposition to the end of the pawl 78 and having a tapered surface which will, when the armature is withdrawn into the electromagnet, force the pawl from the notch 82 so that the drum may be rotated. This will not interfere with the locking action after the next station has been reached, for upon the withdrawal of the armature from the electromagnet by the spring 76, the pivoted arm 84 will merely rotate around its pivot and pass over the end of the pawl.

It will be noted that in the mechanism shown and described in Figures 1 and 2 that the lateral travel of the bar 14 upon which is mounted the pair of yokes 22—24, is less than the travel of the core member 4 within its associated coil, this motion being amplified by the lever system. There may, however, be some instances in which it is desired to have the lateral motion of the device actuated by the rotating studs directly drive the cores into the coils. Such a construction is shown in Figure 3 in which a coil member 2' has its associated core 4' directly threaded into the end of a bar 14' which is longitudinally movable, only one core-coil assembly being shown as illustrative as before. On this bar are mounted a pair of yoke members 22'—24', similar to the yokes 22—24 as shown in the first instance, and mounted on the bar 14' in exactly the same manner as formerly described. However, in this instance it is necessary to have the spread between the ends of the yoke members substantially twice the travel of the iron core 4' from the position in which it is entirely outside of the coil to that in which it is entirely within the coil.

In this instance the slots in the frame member through which the bar 14' runs are also provided with small rollers 86 so that the bar will be easily slidable in its longitudinal plane. The core members 4' may be threaded into the end of the bar different distances to allow for adjustments. The adjustable studs 38' in this instance engage the yoke members 22'—24' in exactly the same manner and may be adjusted in a longitudinal plane in exactly the same way as the stud members 38 in the earlier described construction.

If in some instances it is desired to ratchet the carrying drum mechanically instead of by the use of an electromagnet, Figure 4 discloses a possible construction for this purpose. There is shown therein an end view of the drum assembly where the end plate 26 of the drum carries the usual assembly of indexing studs 38. There is also mounted on the shaft 28, which is the axis for the rotation of the drum assembly, a ratchet wheel 88 which is provided to cause the drum assembly to be turned to different predetermined angles, depending upon how many station set-ups are desired. Frame members such as 90 support a longitudinal L bar 92, the short section of which is provided with a projecting tip 94 which is adapted to fit within the index notches 82 of the end plate 26 of the drum. The bar 92 is spring-biased downwardly by a coil spring 96 which surrounds one end of the bar and presses against a small disc 98 formed on the end of the bar and the frame member 90.

Pivoted on the bar 92 is a small pawl 100 having two fingers, one of which is adapted to engage the teeth of the ratchet wheel 88 and the other of which has secured thereto a short tension spring 102, the opposite end of which is fastened to a spaced projecting tip 104 on the bar 92. This spring biases the projecting arm of the pawl 100 toward the ratchet wheel 88. Also extending outwardly from one side of the member 92 is a stop member 106 which is adapted to engage with a second ratchet wheel 108 mounted on the shaft 28 in juxtaposition to the first ratchet wheel 88. Engaging the lower surface of the end 98 of the bar 92 is one end of a pivoted lever 110 which may be actuated by manual pressure. As the outer end is pressed down, the inner end will force the bar 92 upwardly. This movement first removes the indexed tip 94 from engagement with the notch 82. It next causes the tip of the pawl 100 to force against the ratchet wheel 88 and turn the drum assembly until the projecting stop 106 comes opposite to a tooth on the ratchet 108 which is the position of index and also stops the next index notch 82 in alignment with the projecting tip 94 so that when manual pressure is removed it will fall into this slot and again lock the mechanism in the next position. The spring 96 of course returns the mechanism to its initial condition. Thus the device may be operated either mechanically or electrically.

When the device is being operated electrically by the actuation of the electromagnet, it may be desired to use the same actuated button or push rod for both setting up the stations and actuating the solenoid to cause the drum to rotate one position. Mechanism providing for this is shown in Figure 5 in which a shaft 112 has mounted on its outer end thereof a knob 114, said shaft being trunnioned in suitable supports 116 for either longitudinal or rotative movement. The shaft is also provided with two V notches 118 and 120, the latter having one side with much less taper than the remainder. Mounted upon the rotating rod 112 adjacent the inner end is a gear member 122.

This rod is mounted in juxtaposition to the side of one of the rotating drum discs 26 and in such a manner that the gear member 122 may be brought into engagement with the adjusting gears 34 of the drum assembly. Mounted just to the rear of the inner end of the shaft 112 are a pair of contacts 124 which are connected in circuit with the controlling solenoid 58 and the supplying battery 60. Connected to the opposite plate of the drum assembly is a small disc 126 having thereon indicating numerals so that the operator is cognizant of to what station he has the receiver tuned. Also supported on a portion of the frame 128 is a small spring-biased taper pin 130 which is adapted to engage with the notches 118 and 120 on the rotating shaft 112.

It will thus be evident that in the device as shown the circuit to the solenoid is open, the contacts 124 being spaced apart. Upon axial force being applied to the shaft 112, the contacts will be closed and the solenoid energized to notch the mechanism one position. This can be done by the tapered point of the pin 130 riding upon the surface of the groove in which it is shown. If, however, it is desired to manually adjust one of the traveling studs, the shaft 112 may be pulled outwardly to bring the gear 122 into engagement with one of the associated gears 34. This causes the pin 130 to snap into the next adjacent circular groove 118 which maintains the two gears in juxtaposition so that as the knob 114 is caused to rotate, the stud will travel back and forth on the threaded shaft for desired adjustment. This also insures that the solenoid remain deenergized so that there will be no danger of parts being

broken by accidental solenoid operation while the gears are in engagement. This also shows means for observing to what station the device is tuned.

We claim:

1. In tuning mechanism, means for tuning a radio receiver to different stations, longitudinally movable means connected to the tuning means, a rotatable drum mounted adjacent the longitudinally movable means and having its axis parallel thereto and a plurality of members projecting radially from the drum at different angular locations to engage the longitudinally movable means and cause it to move as the drum rotates.

2. In tuning mechanism, a longitudinally movable means for tuning a radio receiver, a rotatable drum mounted adjacent the longitudinally movable means and having its axis parallel thereto, a plurality of axially adjustable means projecting beyond the drum and angularly spaced, divergent means mounted on the longitudinally movable means engageable by the projecting means on the drum whereby as the drum rotates the projecting means engages the divergent means to cause the longitudinally movable means to move and tune the set.

3. In tuning mechanism, means for tuning a radio receiver, a longitudinally movable bar connected thereto, a pair of divergent arms mounted on said bar, a rotatable drum mounted with its axis parallel to the bar and adjacent thereto with the arms extending substantially tangentially to the drum, and a plurality of axially adjustable projectible means carried by the drum in different angular positions capable of engaging the diverging arms sequentially and means for rotating the drum whereby as the different projectible means engage the arms the longitudinally movable means will assume different positions and the receiver will be tuned to different stations.

4. In tuning mechanism, means for tuning a radio receiver, longitudinally movable means connected thereto, a pair of divergent arms connected to the means, a rotatable drum mounted adjacent the means with the arms extending substantially tangential thereto, means to rotate the drum, a plurality of axially adjustable means carried at different positions of the circumference of the drum, cylindrical projections on the last-named means to engage the divergent arms and force the longitudinal means in the direction of its axis until the throat thereof is reached as the drum rotates and means to allow the projections to pass through the throat.

5. In tuning mechanism, means for tuning a radio receiver, a longitudinally movable bar connected to said means, a pair of spaced divergent arms mounted on said bar, a rotatable drum mounted adjacent said bar with the arms extending substantially tangentially to said drum, a plurality of means movable axially of the drum mounted at different angular positions adjacent the periphery thereof and adapted to engage the arms sequentially as the drum is turned, step-by-step means for rotating the drum, the length of each step being the arcuate distance between the axially movable means, whereby the bar is moved longitudinally and the receiver tuned as the drum is rotated.

6. In tuning mechanism, means for tuning a radio receiver, a longitudinally movable bar connected thereto, a pair of spaced diverging members mounted on said bar, a rotatable drum mounted adjacent the bar with the diverging members substantially tangent thereto, a plurality of arcuately spaced threaded shafts rotatably mounted adjacent the periphery of the drum, traveling indexing assemblies mounted on each shaft capable of moving axially betwen the ends of the drum and engaging the spaced diverging members at one position of travel, gear means mounted on one end of each of the shafts, step-by-step means to rotate the drum, each step being the arcuate distance between adjacent index assemblies and manual rotatable means capable of being brought into engagement with the gear means on the threaded shaft which is in position to index whereby the setting of the traveling assembly on that threaded shaft may be changed.

7. In tuning mechanism, means for tuning a radio receiver, a longitudinally movable bar connected to said means, a pair of spaced divergent arms mounted on said bar, a rotatable drum mounted adjacent said bar with the arms extending substantially tangentially to said drum, a plurality of means movable axially of the drum mounted at different angular positions adjacent the periphery thereof and adapted to engage the arms sequentially as the drum is turned, step-by-step means for rotating the drum, the length of each step being the arcuate distance between the axially movable means, whereby the bar is moved longitudinally and the receiver tuned as the drum is rotated, and locking means for holding said rotatable drum in indexed position which is released upon movement of the step-by-step driving means.

LUDWIG FICHTER.
EDWARD KAEGI.