April 10, 1956 G. A. MOORE 2,741,390

HEAVY DUTY CONTAINERS

Filed April 19, 1952

FIG. 2

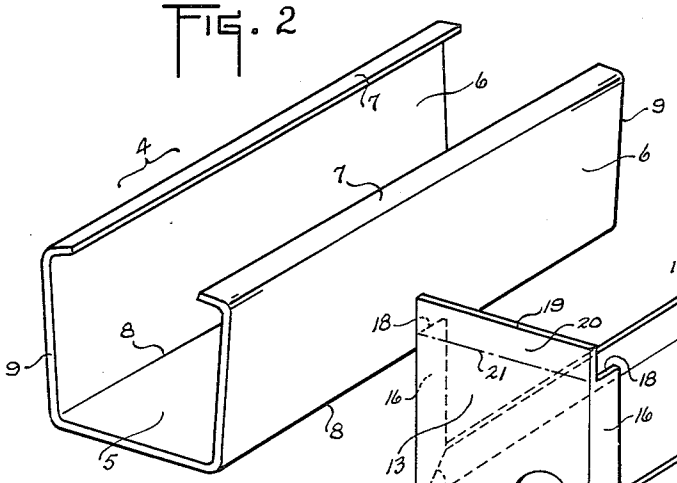

FIG. 3

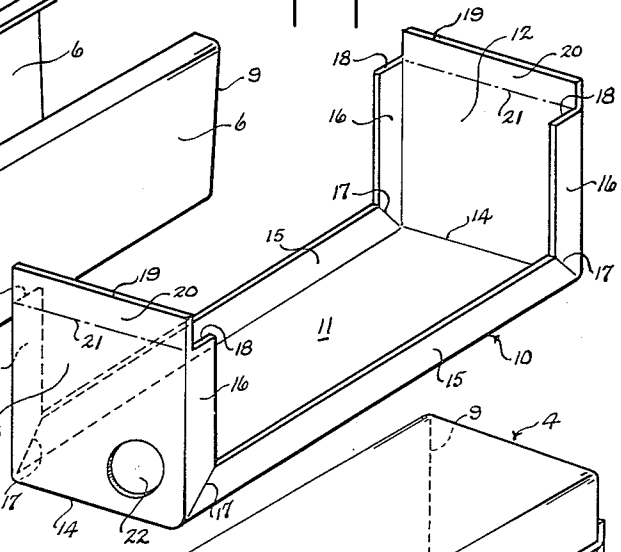

FIG. 4

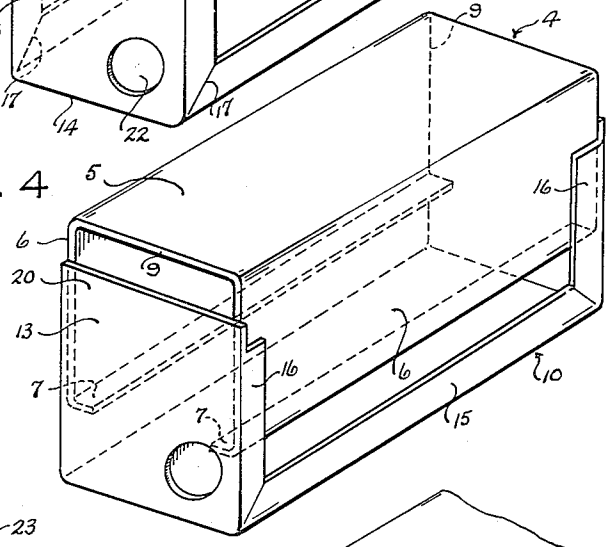

FIG. 1

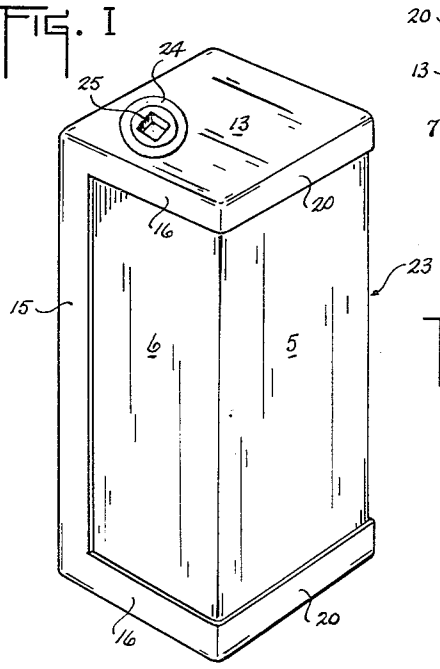

FIG. 5

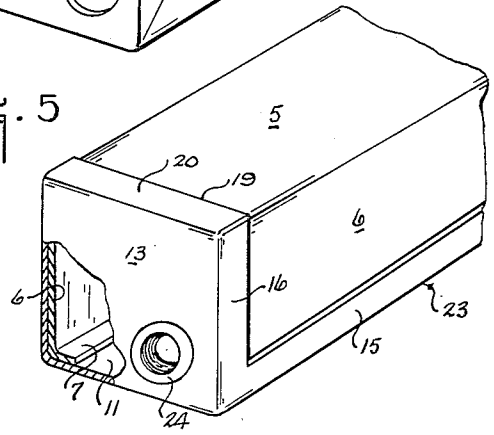

INVENTOR

George Arlington Moore

United States Patent Office 2,741,390 Patented Apr. 10, 1956

2,741,390

HEAVY DUTY CONTAINERS

George Arlington Moore, New York, N. Y.

Application April 19, 1952, Serial No. 283,218

4 Claims. (Cl. 220—4)

This invention relates to containers made of generally rectangular shape and of metallic or fiberglass materials including sheet. One such material may be aluminum, the container being especially adapted to hold petroleum products.

This application is in part a continuation of my application Serial No. 278,528 filed March 26, 1952, now Patent No. 2,731,167.

The invention is more particularly concerned with improvements in containers having relatively large capacity and formed of pre-shaped parts constituting male and female members being assembled together in such manner that the bottom, side walls and top end closure of the container may be completed in simple and efficient methods of operation which may utilize existing machinery and equipment to provide a light weight but strongly reinforced and economical liquid tight container.

A particular object of the invention is the provision of a container suitable for the shipping of high octane gasoline and other volatile liquids, the container being preferably made of aluminum to provide desirable features such as, surface reflection of heat rays and light weight, the container thereby being less susceptible to heat absorption than conventional steel drums and relatively much lighter in net weight.

Another object of this invention is to provide a heavy duty container with strongly reinforced seams to withstand rough handling yet having a wall structure that is reasonably flexible to withstand the imposition of inertia shock.

Still another object of the invention is the provision of a light weight heavy duty container for transportation of liquids that conserves at least twenty three percent of end closure waste materials and thirty percent of cargo or warehouse space compared with round shaped drums and when discarded provides a relatively high salvage scrap value.

A further object of the invention is to provide improved heavy duty containers made of metallic sheet material parts in such manner that the construction of the containers do not require expensive machinery, dies and tools that are necessary to fabricate conventional round shaped containers, especially with respect to the construction of the body and the attaching of the end closures thereof, the improved containers being provided with reinforced marginally flat surface engagements secured together constituting the complete seams of the container including the top and bottom closures thereof.

A more detailed object of this invention, is the provision of a container made of a pair of generally U-shaped pre-formed parts, one of the said parts comprising three side walls at least two of which are provided with inwardly opposed marginal rigidizing flanges. The other part comprises a side wall having at each end thereof opposing end walls at substantially right angles thereto, the said walls having side flanges formed at right angles thereto and the opposed end walls having laterally extended top portions to form opposed assembly locking

flanges. The said pair of U-shaped parts are assembled together in such manner that the side walls and end closures are simultaneously assembled into a container structure, the said flanges of one part engaging marginal surfaces of the other, the said laterally extended portions being bent and lapped over marginal portions of the associated part to secure the related parts in fixed assembly.

A further detail object of the invention, is the provision in the assembly of parts to form a container whereby walls of one structural part of the assembly are arranged to exert permanent pressure upon exterior marginal wall portions of the other structural part, the pressure exerted tightening surface engagements of marginal wall portions of the assembled structures and thereby provide means with which seams of the container may be effectively bonded.

A still further object of this invention is the provision of a metallic heavy duty container having marginally disposed reinforced seams adapted for soldering, welding or brazing in a simple and expeditious manner, and the container wall surfaces may be treated with anodic oxide coatings whereby surface hardness may be provided to further reinforce the container.

These and other objects of the invention will be apparent from a consideration of the form of the container which is shown by way of illustration in the accompanying drawings, wherein;

Fig. 1 is a perspective view of the completed container;

Fig. 2 is a perspective view of a pre-shaped part used in the assembly of the container;

Fig. 3 is a perspective view of a companion pre-shaped part used in the assembly of the container;

Fig. 4 is a perspective view of the pre-shaped parts being associated in the steps of assembly, and

Fig. 5 is a fragmentary view in perspective of the assembled container with a portion of an end wall broken away.

Referring to Figs. 1 to 5, there is illustrated a container (Fig. 1) formed from two pre-shaped members one of which (Fig. 2) is a U-shaped part formed of sheet having two substantially parallel related side walls with the top longitudinal edges having opposed flanges and an adjoining base wall disposed at substantially right angles to the said side walls. The other member (Fig. 3) is a pre-shaped part formed of sheet having a base wall and two opposing end walls disposed at right angles thereto the said walls having side flanges formed at right angles in relation to the walls and terminating short of the end edges of the opposing end walls. The pre-shaped members constitute a hollow male part (Fig. 2) and a female hollow part (Fig. 3) and are assembled together (Fig. 4) in container forming relation, the related parts constructing the side walls and the end closures of the container.

While the container may be formed of any suitable material one preferred embodiment for the pre-shaped parts is aluminum because of its desirable characteristics such as, weight advantages which is relatively sixty six percent lighter than steel and will reflect up to ninety six percent of imposed heat rays, the aluminum container will not rust and the salvage scrap value of such container when discarded may be up to twelve or thirteen cents per pound. The simplicity of the container structure affords a varied range of liquid capacities from one pint to fifty five gallons, the gauges of sheet material varying from 0.010 to 0.125 or more inches thickness.

Referring particularly to Fig. 2 of the drawing a hollow pre-shaped part 4 of sheet material is provided having a longitudinal base wall 5 of generally greater length than width and a pair of opposing walls 6 formed substantially upright from corner junctions 7 the respective

upright position being at greater than right angles to the longitudinal wall, the said upright walls having oppositely disposed flanged edges 8 formed at right angles thereto. The said part terminates at each end with the square edges 9.

Another pre-shaped part (Fig. 3) of sheet material is provided having a longitudinal base wall **11** and a pair of opposing end walls **12** and **13** bent upright and at right angles from the said base wall at the corner junctions **14**, the said walls having pairs of right angularly disposed side flanges **15** and **16** having substantially abutted mitred joints **17** adjacent each corner of the wall junctions. The flange **16** terminates in square edges **18** and short of the top end edges **19** of the upright end walls to provide the extended portions **20** which constitute flanges having bending junctions at the lines **21**. A hole **22** is provided in the end wall **13** which may be adapted to contain any suitable type of sub-closure such as a flanged bushing provided with a threaded tapped hole suitable to receive a plug and thereby serve means for a filling and dispensing sub-closure.

The assembly operation for the construction of the container (Fig. 4) comprises the insertion and pressing of the one pre-shaped part **4** (male) into the other pre-shaped part **10** (female) the male part having the side walls **6** depressed inwardly and held so retained until the flanged surfaces **7** engage the interior surface of the base wall **11** of the latter part when it is released to allow the side walls to expand and tighten the marginal surface engagements with the side flanges **15** and **16**. The flanges **20** are then bent inwardly to overlap marginal portions of the base wall **5** (Fig. 5) locking the assembly of the container.

The engaging flanges **15**, **16** and **20** of the female member may be secured in seam forming relation by employing well known and conventional methods for soldering, welding or brazing, the said flanges constituting the seams for the body and ends of the container **23** (Fig. 1). The side walls, bottom and top end closures of the container are formed and seamed in such simple manner that it avoids the structural complications and waste of material inherent in conventional round drum shaped containers that employ separate closures that are attached to the ends of a seamed body. The end closures for the container of the present invention are integral with one side wall and marginally engaged with the other three side walls of the container, the structure being completed by the assembly, and the seams being formed by securing engaging marginal portions together and thereby provide strong reinforcements around eight marginal border sides of the container structure.

The container (Fig. 1) may be provided with any suitable type of dispensing closure such as a flanged bushing **24** engaging the hole **22** in the end wall **13**, the flange engaging the inner surface of the said wall and secured thereto by being soldered, welded or brazed, the bushing having a threaded hole to receive a plug **25** set flush with the exterior surface of the wall **13**.

The container may be made from black plate sheet materials with soldered seams when it is desired to provide relatively light capacity sizes and the dispensing sub-closure may be of any conventional type such as threaded caps or friction disc type plugs, the hole in the end wall of the container being adapted to suit such types.

The completed heavy duty container **23** (Fig. 1) is provided and serviceable for relatively large liquid capacity such, for example, fifty five gallons of high octane gas or other petroleum products also; paint, solvents, oils, syrups and etc.; when the container is made of aluminum the net weight may be reduced approximately sixty six percent compared with relative gauges in steel. A steel round drum used for transporting high octane fuel weighs about eighty pounds whereas an equal capacity

container of the present invention may weigh as little as thirty pounds and occupy at least thirty percent less floor space. The waste of twenty three percent or more material in making bottoms and heads for round drums is avoided, and the salvage scrap value of the aluminum containers may recover twelve cents per pound. The exterior wall surfaces of the aluminum container will reflect up to ninety six percent of heat rays imposed thereupon resulting in relatively low internal pressures building up in the container when carrying volatile liquids.

The seams of the container may be welded or brazed as desired. One suitable method for welding the flanged seams may be as follows: Prior to the assembly of the container the engaging marginal surfaces are treated with a suitable brazing flux and after assembly the flanges are clamped tightly to the engaging wall surfaces, the assembly is then passed through a heating tunnel or oven to elevate a temperature sufficient to activate the brazing flux but less than the fusing temperature of the metal which welds the said flanges in seam forming relationship bonding the assembled parts of the container into an integral structure. Another example for combining the seams of the container is to employ a comparatively new method of dip brazing the flanged seams whereby, the marginal seam surface areas are treated with compounds that chemically re-act when dipped in suitable liquids brazing the engaging parts together in seam forming relationship.

The containers may be treated for interior and exterior surface finishes by being anodized, sprayed or otherwise coated with suitable anodic oxide materials. Such treatments harden the wall surfaces of the container and form a protective as well as a pleasing surface finish to the container.

The container herein described is provided with characteristics of efficiency and economy whereby transportation cargo space may be increased in pay load at least thirty percent together with a substantial saving in net weight of containers, compared with the conventional round shaped steel drums. Large sizes of the rectangular shaped containers of the present invention may be handled easily by employing a circular shaped portable sleeve or hoop placed around a central portion of the filled container to roll it like a barrel to the desired location for storage or use after which the sleeve may be removed for moving other like containers.

I claim:

1. A liquid carry heavy duty container of rigid metal sheet being provided with four side walls and two opposed end walls, the side walls being shaped in rectangular cross section formed of two pre-shaped wall forming elements assembled together and being welded in seam forming relationship along eight marginal border sides of the container wall structure, which comprises one of said elements composed of a flat longitudinal base wall with two opposed up-turned end walls, the base wall constituting one of said side walls, the longitudinal base wall having up-turned parallel marginal flanges along longitudinal corner edges, which flanges are junctively joined with each of a pair of in-turned parallel marginal flanges along vertical corner edges of each of said up-turned end walls, top corner end edges of said vertical flanges being spaced downwardly of a bendable up-right flange portion along the horizontal top of each end wall, the other element composed of a flat base longitudinal wall having two opposed upwardly and outwardly inclined longitudinal side walls constituting three other of said side walls, the inclined walls being provided with a right angular ninety degree in-turned marginal flange along respective longitudinal corner end edges, said inclined side walls of the element being sprung inwardly in order to be engaged with interior surface portions of said longitudinal and end wall flanged margins of the first mentioned element, said longitudinal marginal flanges of the sprung side wall portions being seated squarely in flat surface

to surface relationship upon the flat base longitudinal side wall having said up-turned end walls, said bendable up-right flanges thereof being bent inwardly and downwardly upon marginal surface portions of said base longitudinal side wall having said sprung side walls, which side walls have a strong tendency to spring outwardly, the tendency being rigidly opposed by interior surfaces of engaging flanges, said side walls thereby being rendered rigid to oppose seam welding pressure when being applied upon exterior surfaces of said flanges, wall surface engagements of which flanges constitutes liquid tight seam structure of said container.

2. A rectangular shape container made of substantially rigid metal sheet material being provided with four longitudinal side walls arranged in opposing pairs and having two opposed end walls, the enclosure walls being formed of an assembly of two pre-formed component parts comprising a first component being composed of one of said longitudinal side walls having integral wall portions that provide said two opposed end walls, each of the three wall portions having a pair of opposed marginally bent flanges along their respective corner edges and being disposed at substantially right angles to each of their corresponding walls, the horizontal top ends of each end wall being provided with an upwardly extended marginal portion, the second component being composed of three of said longitudinal side walls, two of said walls being opposed and each wall of said two being inclined outwardly of a right angle with respect to the third wall portion thereof, each inclined wall opposed being provided with an exclusive inturned right angularly bent flange along its longitudinal corner edge, the opposed transverse end edges of the three longitudinal walls and flanged portions of two walls thereof being uniformly flat and continuous in surface plane, said pair of inclined side walls of the second component being forcibly sprung inwardly at right angles to the third wall portion thereof and being inserted into assembly relationship with said first component part so that the exterior surface of said longitudinal flanges of the two opposed side walls thereof are disposed in flat surface contact upon the interior surface of said one longitudinal wall of the second component part and the exterior flanges thereof including the exterior flanges of its integral end wall portions providing means with which to rigidly resist the tendency of the sprung walls to spring outwardly to their respective originally formed inclined position and permanently confine each of said inwardly sprung walls in registered seam forming relationship and thereby form said enclosure walls of the container, each of said top marginal portions of the end walls being bent inwardly and downwardly upon a corresponding margin

of the exterior surface of said third longitudinal side wall and thereby lock together said assembly relationship of the first and second component parts, the flanges and inwardly bent marginal portions in engagement constituting seams along eight marginal corner sides of said enclosure walls, and said marginal seam forming engagements being united together with bonding means to hermetically seal the enclosure walls.

3. A container as set forth in claim 2 wherein each of said end walls of the first component being provided with marginally reinforced portions of said marginal seams formed with surface portions of the second component that are positioned along three marginal sides thereof adjacent the end walls, each of said opposed transverse end edges of the second component being engaged in edge to face abutment upon marginal portions of the interior surface of each end wall of the first component, said surface abutted end edges being firmly secured upon the end walls by means of said three marginal seam portions formed adjacent the inner disposed abutted end edges and thereby form rigid support of said end walls.

4. A container according to claim 2 wherein the inner flat surface engagement of the pair of exclusive flanges upon said inwardly sprung side walls of second component are at right angles with respect to surface engagement of side walls upon interior surface of said longitudinal flanges of one side wall of first component, said longitudinal flanges having mitred joints formed with vertical side flanges upon sides of the end walls and the edges of mitred joints abutting in seam secured relationship, said pair of opposed longitudinal marginally formed seams of side walls and said marginally formed seams of end walls being continuously extended along eight marginal corner sides of the enclosure walls thereby forming a hermetic seal of said container including rigid reinforcement of seam surface areas.

References Cited in the file of this patent

UNITED STATES PATENTS

2,014,444	Miller	Sept. 17, 1935
2,046,810	Cannon	July 7, 1936
2,339,255	Dodson	Jan. 8, 1944
2,420,184	Mekelburg	May 6, 1947
2,421,225	Stensgaard	May 27, 1947
2,488,710	Cooper	Nov. 22, 1949
2,620,941	Smulski	Dec. 9, 1952

FOREIGN PATENTS

1,359	Great Britain	1865
3,011	Great Britain	1898
9,560	Great Britain	1905