US00D923882S

(12) United States Design Patent

Choi

(10) Patent No.: US D923,882 S
(45) Date of Patent: ** Jun. 29, 2021

(54) **FIRE EXTINGUISHER HOLDER**

(71) Applicants: **KOREA GYEONGGIDO. CO., LTD.**, Seongnam-si (KR); **GyeongGi-Do**, Suwon-si (KR)

(72) Inventor: **Yong Woo Choi**, Seoul (KR)

(73) Assignees: **KOREA GYEONGGIDO. CO., LTD.**, Seongnam-si (KR); **GYEONGGI-DO**, Suwon-si (KR)

(**) Term: **15 Years**

(21) Appl. No.: **29/678,029**

(22) Filed: **Jan. 25, 2019**

(30) **Foreign Application Priority Data**

Nov. 6, 2018 (KR) 30-2018-0050987

(51) **LOC (13) Cl.** **29-01**

(52) **U.S. Cl.**
USPC **D29/130**

(58) **Field of Classification Search**
USPC D29/125, 126, 129, 130
CPC .. A62C 2/00; A62C 8/00; A62C 13/64; A62C 13/76; A62C 13/78; A62C 11/00; A62C 13/00; A62C 25/00
See application file for complete search history.

(56) **References Cited**

U.S. PATENT DOCUMENTS

3,316,040 A * 4/1967 McGann A47K 10/22 312/45
3,780,972 A * 12/1973 Brodersen A62C 13/78 248/313
4,213,592 A * 7/1980 Lingenfelser A62C 13/78 248/313
4,540,370 A * 9/1985 Hebert B63C 7/26 441/23
5,076,193 A * 12/1991 Keim B63B 17/00 114/343
5,344,112 A * 9/1994 Peterson B60H 1/3229 24/279
5,409,833 A * 4/1995 Hu A61F 2/062 422/421
6,059,245 A * 5/2000 Hermansen B62J 11/00 248/311.2
6,889,947 B2 * 5/2005 Alberts A62C 13/78 248/230.1
7,650,948 B2 * 1/2010 Rousseau A62C 13/70 169/51
D747,177 S * 1/2016 McGinty D8/349
D823,548 S * 7/2018 Seymour D29/125
2020/0330806 A1 * 10/2020 Choi A62C 13/78

* cited by examiner

Primary Examiner — Kimberly Barnes
(74) *Attorney, Agent, or Firm* — Cantor Colburn LLP

(57) **CLAIM**

The ornamental design for a fire extinguisher holder, as shown and described.

DESCRIPTION

FIG. **1** is a perspective view of a fire extinguisher holder showing our new design;
FIG. **2** is a front elevational view thereof;
FIG. **3** is a rear elevational view thereof;
FIG. **4** is a left side elevational view thereof;
FIG. **5** is a right side elevational view thereof;
FIG. **6** is a top plan view thereof;
FIG. **7** is a bottom plan view thereof;
FIG. **8** is a bottom left side perspective view thereof; and,
FIG. **9** is a bottom rear side perspective view thereof.

1 Claim, 8 Drawing Sheets

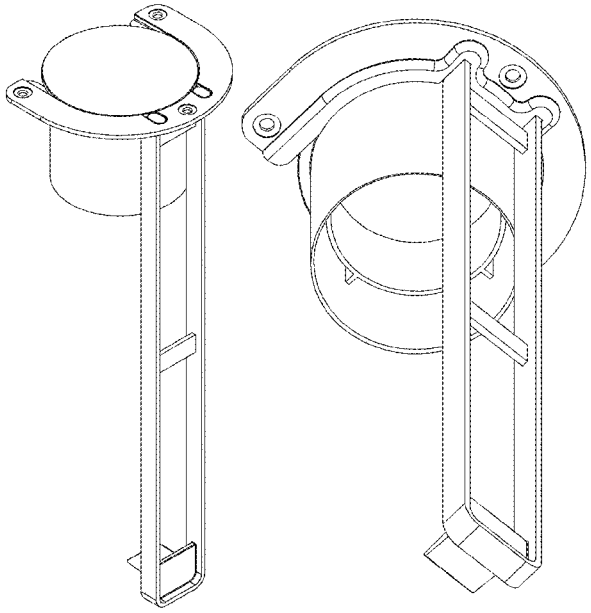

FIG. 1

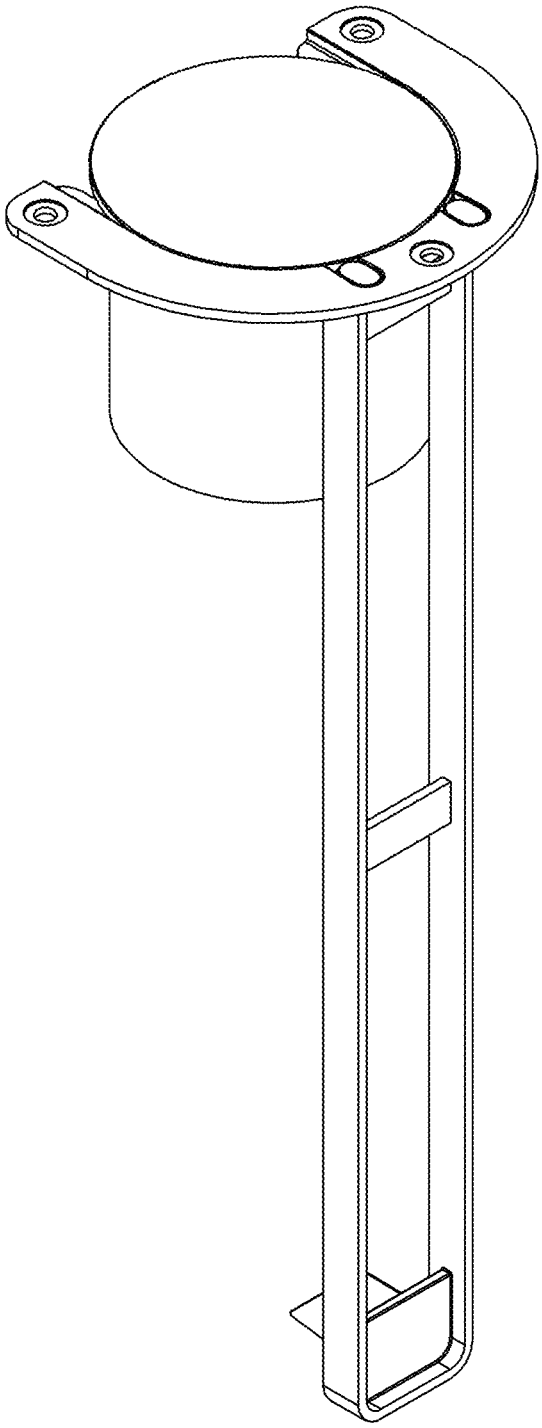

FIG. 2

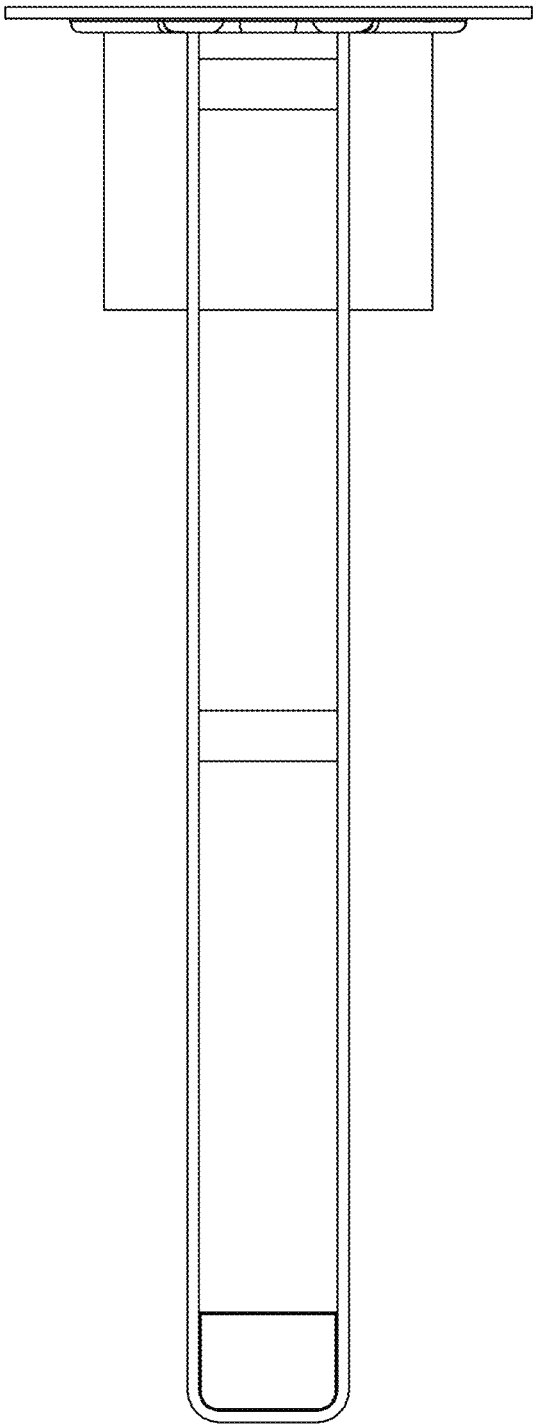

FIG. 3

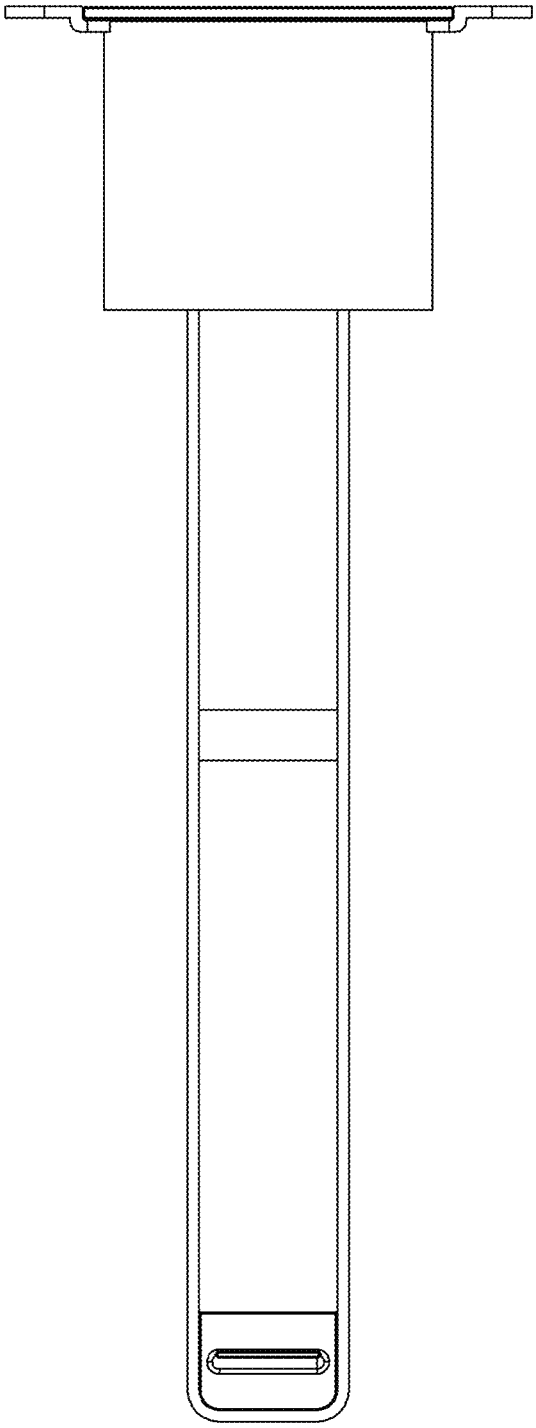

FIG. 4

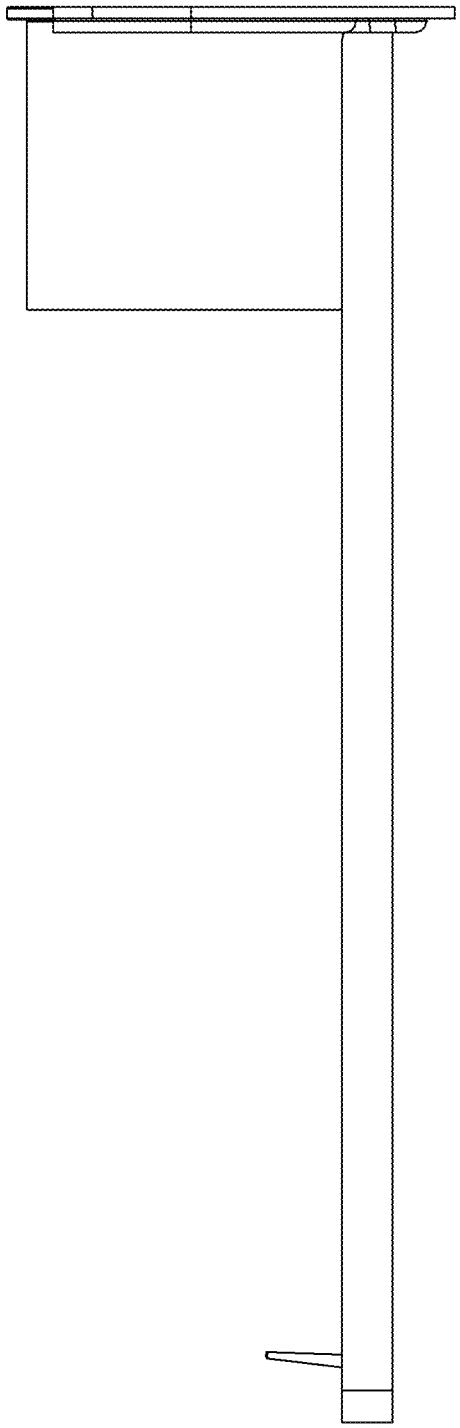

FIG. 5

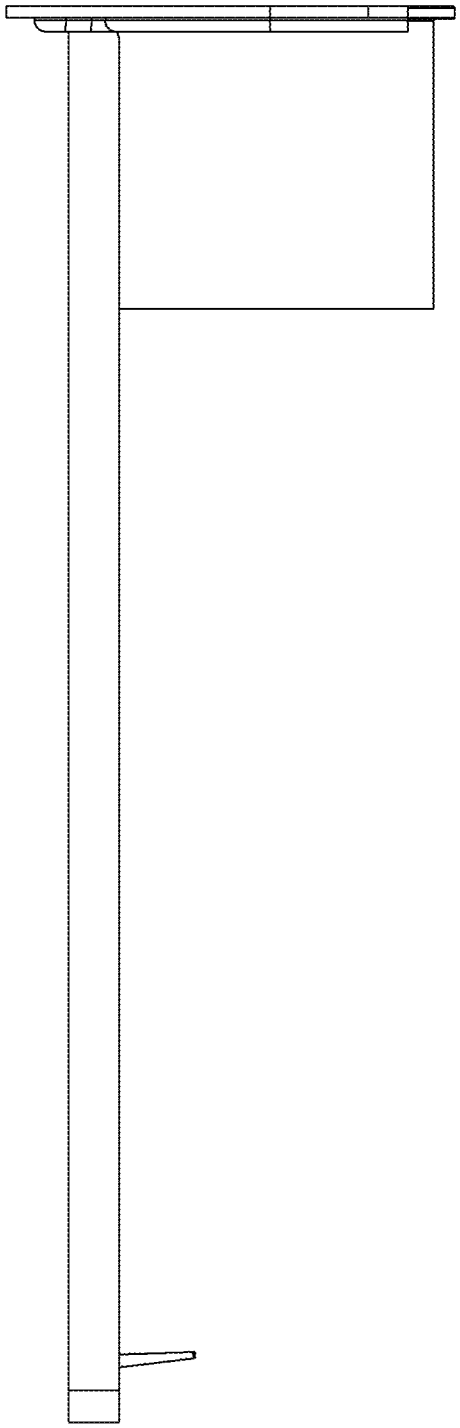

FIG. 6

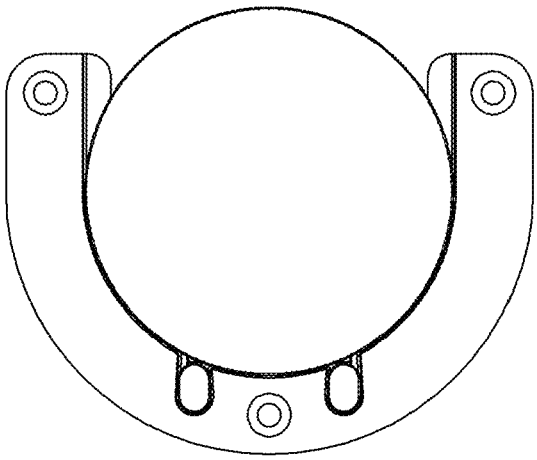

FIG. 7

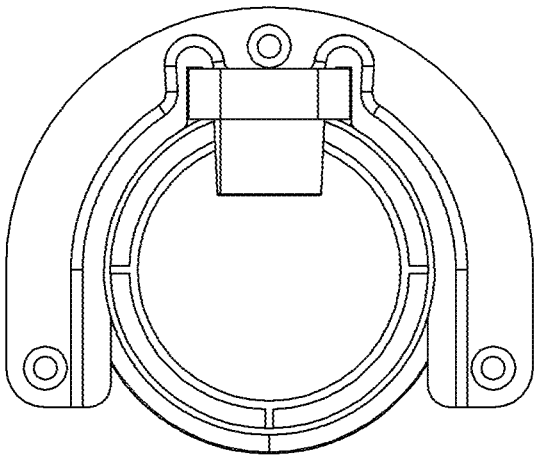

FIG. 8

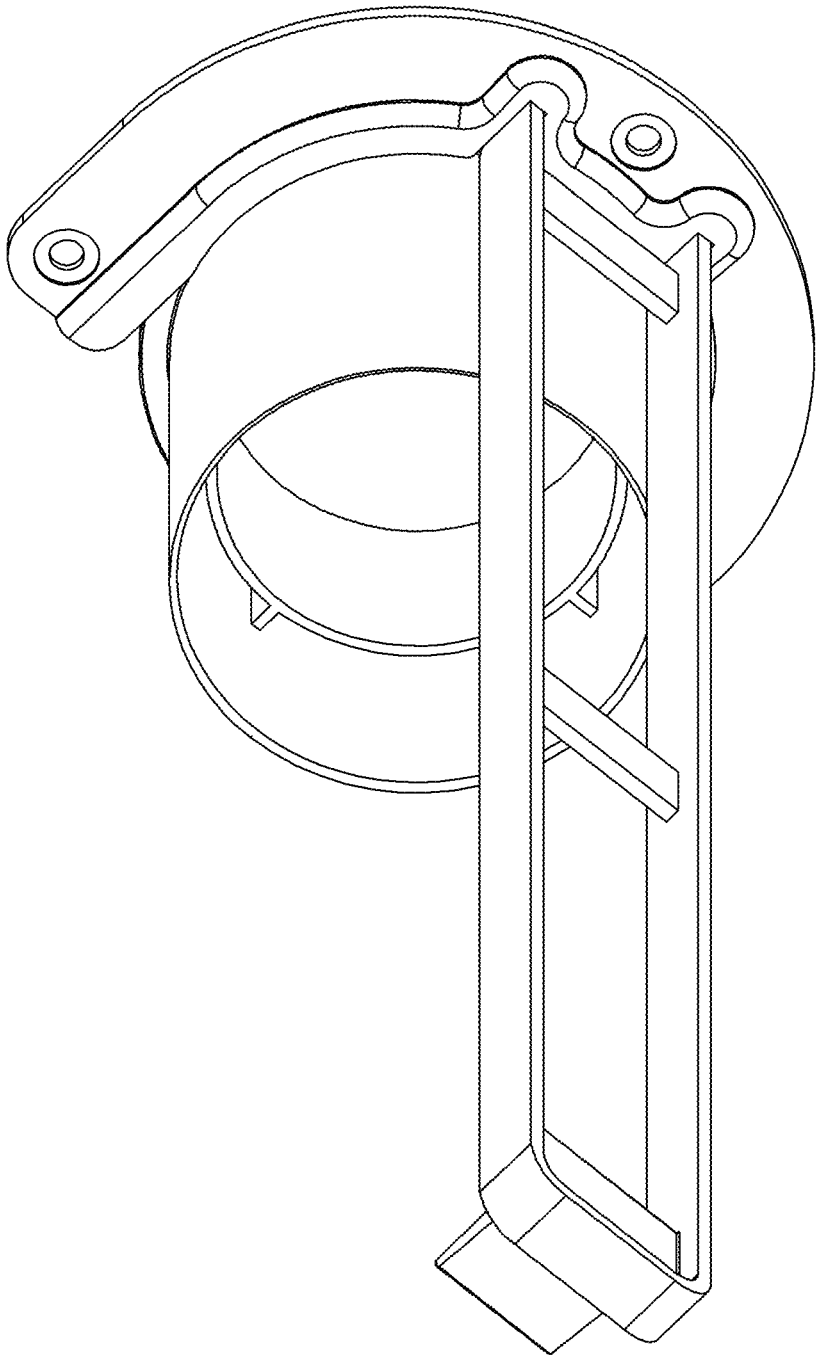

FIG. 9

