J. W. GIBNEY.

TIMING MECHANISM.

APPLICATION FILED FEB. 4, 1915.

1,150,514. Patented Aug. 17, 1915.

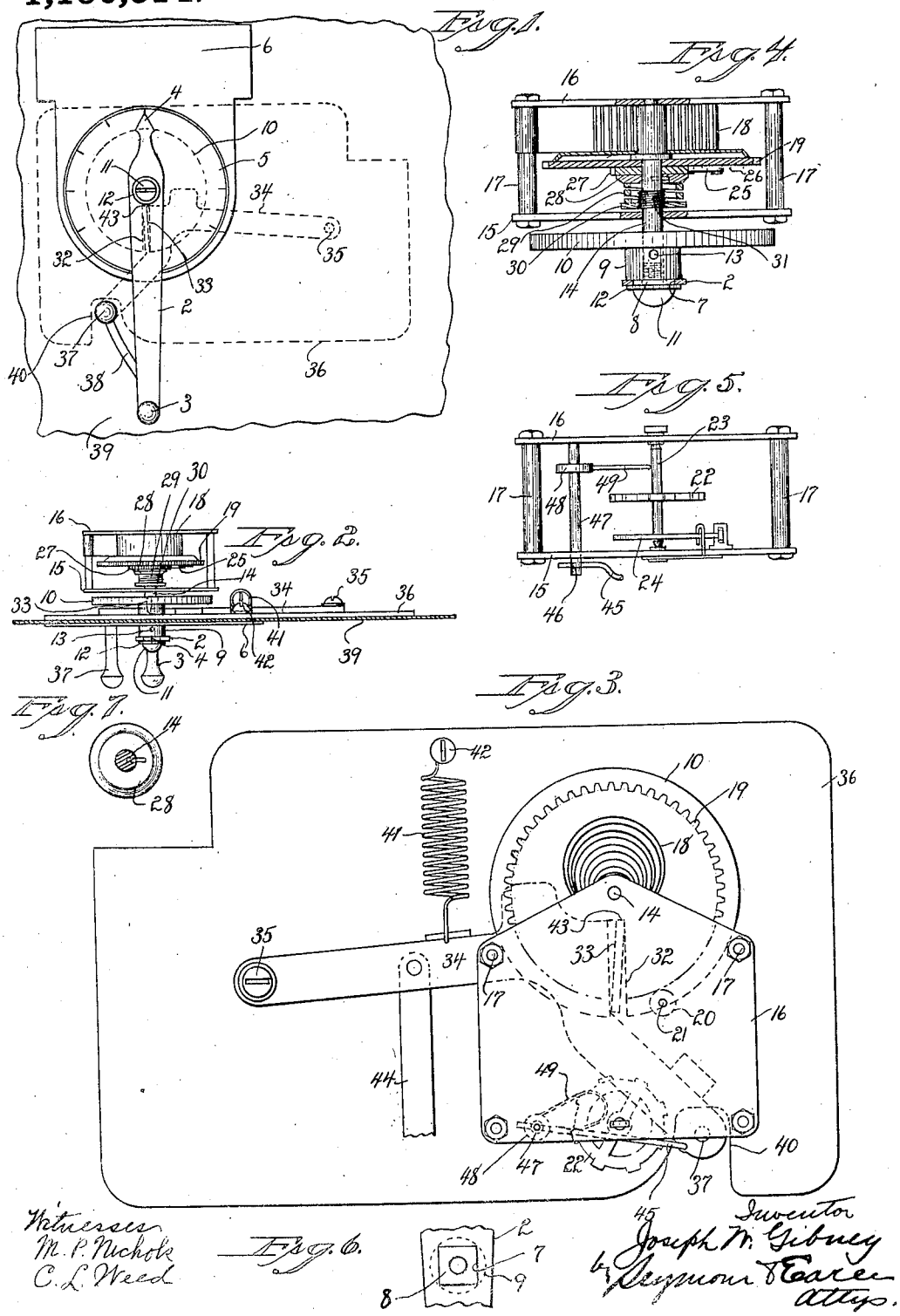

Witnesses
M. P. Nichols
C. L. Weed

Inventor
Joseph W. Gibney
by Seymour & Earle
Attys.

UNITED STATES PATENT OFFICE.

JOSEPH W. GIBNEY, OF NEW HAVEN, CONNECTICUT, ASSIGNOR TO THE SENTINEL MFG. CO., OF NEW HAVEN, CONNECTICUT, A CORPORATION.

TIMING MECHANISM.

1,150,514. Specification of Letters Patent. Patented Aug. 17, 1915.

Application filed February 4, 1915. Serial No. 6,148.

To all whom it may concern:

Be it known that I, JOSEPH W. GIBNEY, a citizen of the United States, residing at New Haven, in the county of New Haven and State of Connecticut, have invented a new and useful Improvement in Timing Mechanisms; and I do hereby declare the following, when taken in connection with the accompanying drawings and the characters of reference marked thereon, to be a full, clear, and exact description of the same, and which said drawings constitute part of this application, and represent, in—

Figure 1 a broken view in front elevation of a timing-mechanism constructed in accordance with my invention and shown as applied to what may represent a portion of the casing of a cooking apparatus. Fig. 2 a plan view of the same. Fig. 3 a detailed view of the mechanism in rear elevation. Fig. 4 a detached plan view of the movement with the friction-spring, the main-spring and the main-wheel in central horizontal section. Fig. 5 a detached underside view of the movement, showing the spring-finger provided for insuring the starting of the balance-wheel of the escapement-train. Fig. 6 a broken view in front elevation showing the mode of applying the setting-lever to the squared shoulder of the sleeve of the timing-disk. Fig. 7 a detached view showing one mode of coupling the friction-disk with the center-arbor.

My invention relates to an improved resettable timing-mechanism for use in conjunction with apparatus designed to be set to be operated at a predetermined time, the mechanism being primarily designed to be used as an adjunct of heating apparatus of the type in which the heat is shut off after the lapse of a predetermined interval, the object being to produce a simple, convenient and reliable timing-mechanism adapted to be reset to shorten the predetermined period to any desired extent without interfering with its tripping function, whereas in the absence of this capacity to be reset the mechanism when once set must be allowed to run through the full period for which it was originally set.

With these ends in view, my invention consists in a resettable timing-mechanism having certain details of construction and combination of parts as will be hereinafter described and pointed out in the claims.

My improved resettable timing-mechanism comprises, as herein shown, a setting-lever 2 furnished at its lower end with a handle 3 and at its upper end with a pointer 4 sweeping over a graduated dial 5 formed at the lower end of a plate 6 located directly back of the lever 2 which is formed with a square opening 7 adapting it to be applied over a square shoulder 8 formed upon the outer end of the sleeve or hub 9 of a timing-disk 10. The said lever 2 is secured in place by means of a retaining-screw 11 tapped into the end of the hub, a washer 12 being interposed between the head of the screw and the outer face of the lever.

The hub 9 is secured by a pin 13 to the projecting outer end of a center or winding-arbor 14 journaled in front and rear movement-plates 15 and 16 which are fastened together by pillars 17 as in ordinary clock-movements. The timing-disk 10 is located directly in front of the front movement-plate 15 in a plane parallel therewith. The rotation of the arbor 14 by the setting-lever 2 winds a main spring 18 the inner end of which is attached to the arbor in the usual manner, while its outer end is fixed to one of the pillars 17 aforesaid. The lever 2 also serves to unwind the main-spring 18 when the device is reset as will be hereinafter described.

Loosely mounted upon the arbor 14 is a main-wheel 19 which meshes into a pinion 20 upon the arbor 21 of an escapement train which may be of any ordinary construction and furnished with a balance-wheel 22, a balance-staff 23 and a balance or hair-spring 24. The said main-wheel 19 carries a pawl 25 actuated by a spring 26 and engaging with the teeth of a ratchet-wheel 27 loosely mounted on the arbor 14 and bearing directly upon the front face of the main-wheel 19, against which it is pressed by a coupling or friction-disk 28 non-rotatably mounted upon the arbor 14 but longitudinally movable thereon, (Fig. 7) and pressed against the ratchet-wheel 27 by the inner coil of a friction spring 29, the outer coil of which abuts against a nut 30 located adjacent to the inner face of the front movement-plate 15 and mounted upon threads 31 on the arbor 14, whereby the tension of the spring 29 may be adjusted as desired, to increase or decrease the friction between the wheel 27 and disk 28. The tension of

the spring 29 must be sufficient to crowd the friction-disk 28 against the ratchet-wheel 27 so as to develop the friction required to couple them for rotation together when the setting-lever 2 is turned counter-clockwise for concurrently winding the main-spring 18 and setting the timing-mechanism. In resetting the mechanism to shorten the period to which it was set and correspondingly unwind the main-spring 18, the lever 2 is turned clockwise against the friction developed by the spring 29 between the disk 28 and the ratchet-wheel 27 which is then held against rotation by the pawl 25 while the main-spring is unwound and the pointer swept clockwise over the dial 5.

The timing-disk 10 aforesaid, is formed with a radial timing-slot 32 receiving a flange-like timing-member 33 formed upon a timing-lever 34 hung upon a screw-stud 35 in an assembling or frame-plate 36 and furnished at its lower end with a handle 37 the stem of which projects through a segmental clearance-slot 38 in the casing 39, which may be considered to be a portion of the casing of the cooking-apparatus in conjunction with which the timing-mechanism is used. For the clearance of the handle 37 the plate 36 is formed in its lower edge with a deep notch 40. A helical spring 41 having its lower end connected with the upper end of the lever 34 and its upper end attached to a screw stud 42 in the plate 36, exerts a constant effort to lift the lever 34 so as to cause the upper edge 43 of the timing-member 33 to either ride upon the edge of the timing-disk 20 or enter the slot 32 which takes place when the said slot and member are brought into registration.

In case it is desired to virtually reset the mechanism by shortening to any desired extent the period to which it was initially set, it is only necessary to grasp the handle 3 of the lever 2 and turn the same clockwise with sufficient force to overcome the friction between the disk 28 and the ratchet-wheel 27. This unwinds the spring 18 and rotates the timing-disk 10 so as to cause its timing-slot 32 to approach the timing-member 33 by the amount which it is desired to shorten the original time-limit or period. In case it is desired to entirely forestall or wholly nullify any given setting of the mechanism altogether, the slot 32 will in the same way be brought into registration with the upper end 43 of the member 33 when the spring 41 will smartly lift the timing-lever 34 and thus lift the rod 44 through which the mechanism is utilized for controlling a cooking apparatus or other apparatus of whatever character.

Preparatory to initially setting the mechanism, the handle 37 must be grasped and drawn downward against the tension of the spring 41 to retract the timing-member 33 from the slot 32 after which the setting-lever 2 must be turned sufficiently in the counter clockwise direction to carry the slot 32 out of registration with the point 43 of the member 33 so that the same will ride upon the periphery of the timing-disk 10 instead of reëntering the slot when the downward pull of the hand upon the lever 34 is removed.

As herein shown, I take advantage of the preliminary downward swinging movement of the operating- or timing-lever 34 to start the balance-wheel 24 of the escapement-train. For this purpose I pivotally mount a small operating-wire 45 in the lower end of the timing-lever 34, close to the handle 37 thereof. The outer end of this wire passes through and plays back and forth in a radial hole 46 in ar oscillating arbor 47 journaled in the movement-plates 15 and 16 and mounting a collar 48 carrying a light starting-spring 49 the free end of which is bent into the form of a loop the outer surface of which is adapted in position to frictionally engage or rub over the balance staff 25 so as to give the same an initial impulse in the direction of oscillation, when the lever 24 is swung downward as described, so that as soon as the setting-lever 2 is operated to wind the spring 18 and let go, the power of the said spring will at once start the escapement train the balance-wheel of which is already swinging.

I claim:—

1. In a timing mechanism, the combination with a main spring, of a winding arbor therefor, a setting-lever for turning the said arbor and winding and unwinding the said main spring, an escapement train, and means for frictionally coupling the said arbor with a member of the said escapement-train whereby the setting-lever may be operated to unwind the spring after the mechanism has been initially set and so forestall the action of the escapement-train.

2. In a timing mechanism, the combination with a main-spring, of a winding-arbor therefor, a setting-lever for turning the said arbor and winding and unwinding the said main spring, a timing disk mounted upon the said arbor, a timing-lever co-acting with the said disk by the rotation of which it is tripped, an escapement-train, and means for frictionally coupling the arbor with a member of the said escapement-train whereby the setting-lever may be operated to unwind the spring after the mechanism has been initially set.

3. In a timing mechanism, the combination with a main spring, of a winding arbor therefor, a setting-lever for turning the said arbor and winding and unwinding the said main spring, a timing disk mounted upon the said arbor, a timing-lever co-acting with the said disk by the rotation of which it is

tripped, an escapement train, means for frictionally coupling the arbor with a member of the said escapement-train, and means connected with the said timing-lever for starting the balance-wheel of the said train swinging.

4. In a timing mechanism, the combination with a main spring, of a winding-arbor therefor, means for turning the said arbor and winding and unwinding the said main spring, an escapement-train, and means for frictionally coupling the said arbor with a member of the said escapement-train, whereby the said winding and unwinding means may be operated to unwind the spring as well as to wind the same.

In testimony whereof, I have signed this specification in the presence of two subscribing witnesses.

JOSEPH W. GIBNEY.

Witnesses:
C. L. WEED,
M. P. NICHOLS.