United States Patent [19]

Beavitt

[11] **3,829,817**

[45] **Aug. 13, 1974**

[54] **ELECTRICAL CONNECTION DEVICES**

[75] Inventor: **Alan Robert Beavitt,** Towcester, England

[73] Assignee: **Plessey Handel und Investments A.G.,** Zug, Switzerland

[22] Filed: **Sept. 22, 1972**

[21] Appl. No.: **291,520**

[30] **Foreign Application Priority Data**

Oct. 7, 1971 Great Britain 46621/71
Jan. 8, 1972 Great Britain 05690/72

[52] **U.S. Cl.**..... **339/17 F,** 339/176 MF, 339/206 M, 339/252

[51] **Int. Cl.** **H01r 13/54,** H05k 1/07

[58] **Field of Search**...339/17, 18, 75 MP, 75M, 339/154, 156, 157, 174, 176, 191, 192, 195, 339/196, 204, 205, 210, 206, 217, 218, 242, 339/244, 248, 252 R, 252 P, 255, 262

[56] **References Cited**

UNITED STATES PATENTS

3,082,398	3/1963	Valach	339/176 MF
3,086,190	4/1963	Neidecker et al.	339/252 P X
3,101,231	8/1963	Klostermann	339/176 MP
3,262,082	7/1966	Gammel, Sr.	339/176 MP X
3,307,139	2/1967	Prise	339/205 X
3,399,452	9/1968	Reid	339/17 L X
3,541,490	11/1970	Berg	339/75 M
3,614,707	10/1971	Kaufmann et al.	339/17 F

Primary Examiner—Bobby R. Gay
Assistant Examiner—Terrell P, Lewis
Attorney, Agent, or Firm—Scrivener Parker Scrivener & Clarke

[57] **ABSTRACT**

A variety of connection devices, and methods for their manufacture, having contact members which make contact with conductive pads of printed circuit boards, the pads being pitched at 0.25mm or thereabouts. Each contact member comprises a resilient strip of conductive material which, in order to accommodate pad irregularities, is shaped to present two contact-making crests spaced from each other along the length of the strip, and joined to each other by an intervening loop of the strip.

8 Claims, 12 Drawing Figures

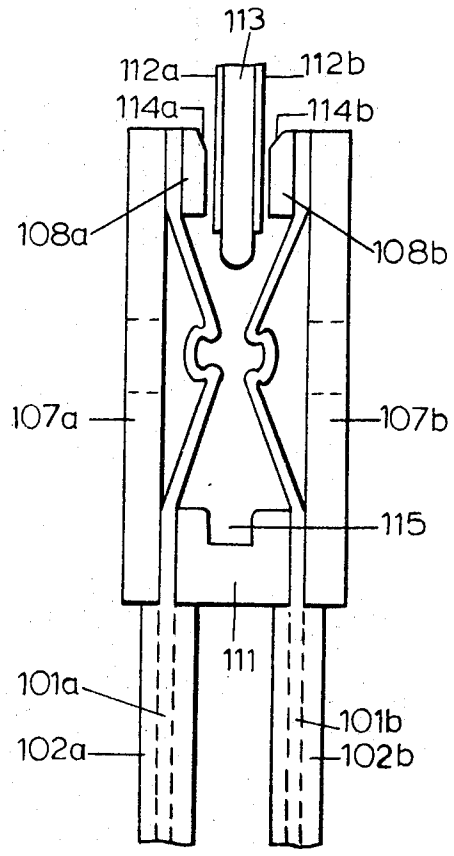

FIG.1.

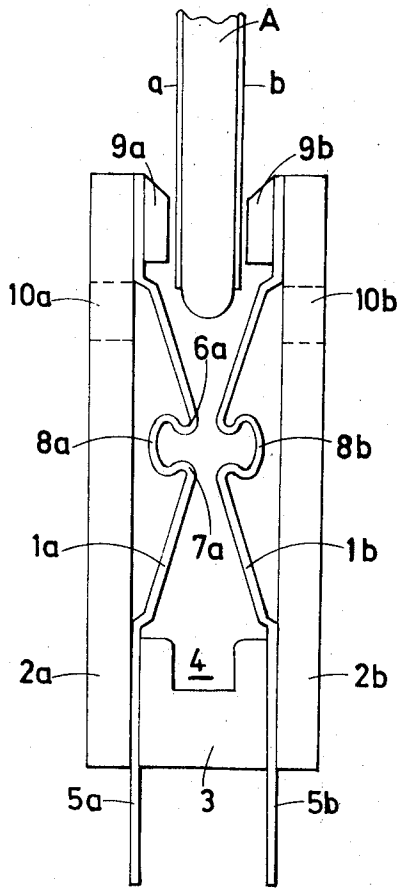
A
a
b
9a
9b
10a
10b
6a
8a
8b
1a
7a
1b
4
2a
2b
5a
3
5b

FIG.2.

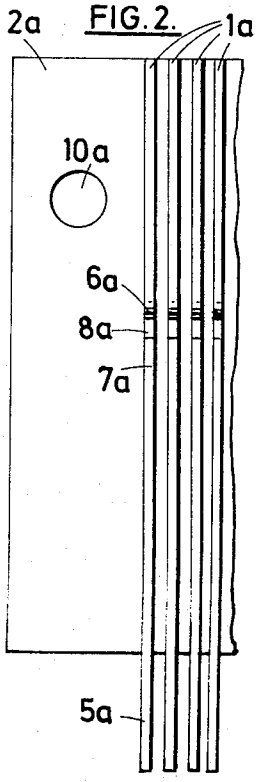
2a
1a
10a
6a
8a
7a
5a

FIG. 3.

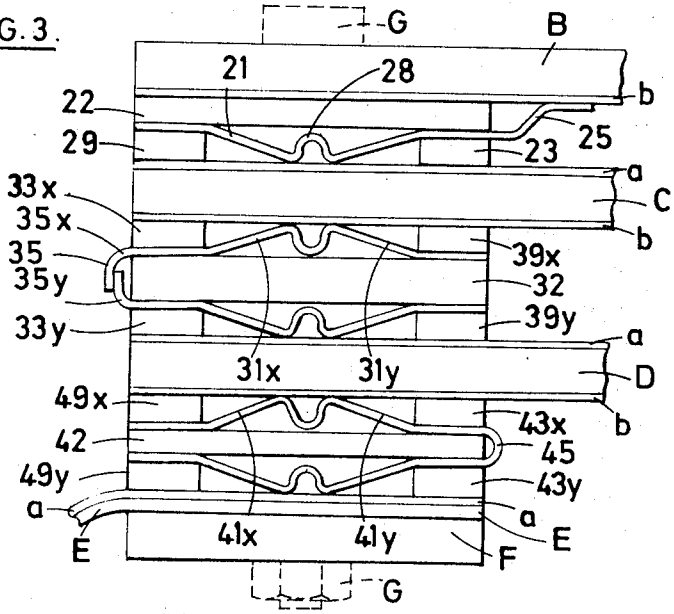

FIG. 4.

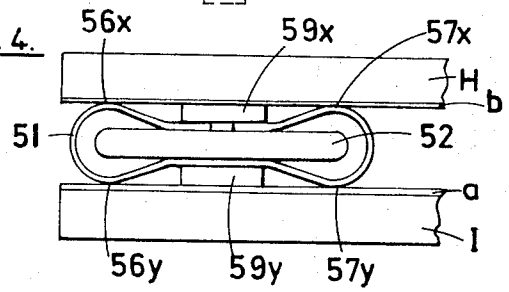

FIG. 5.

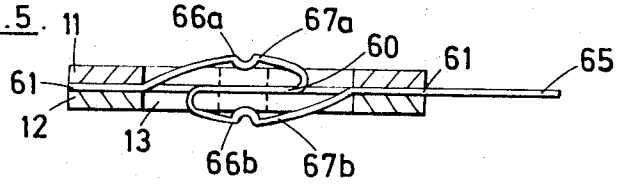

FIG. 6.

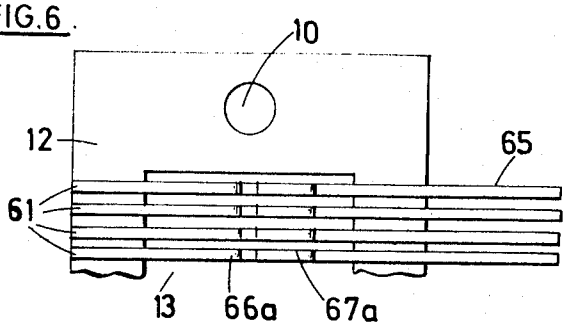

Fig.7.

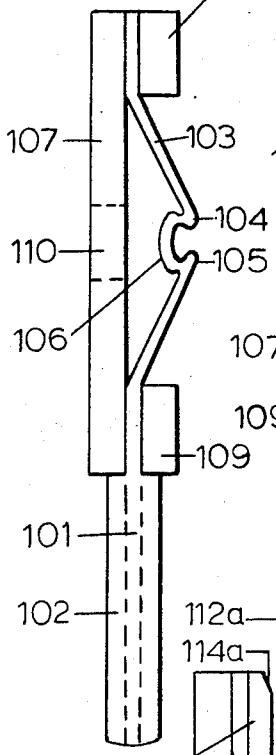

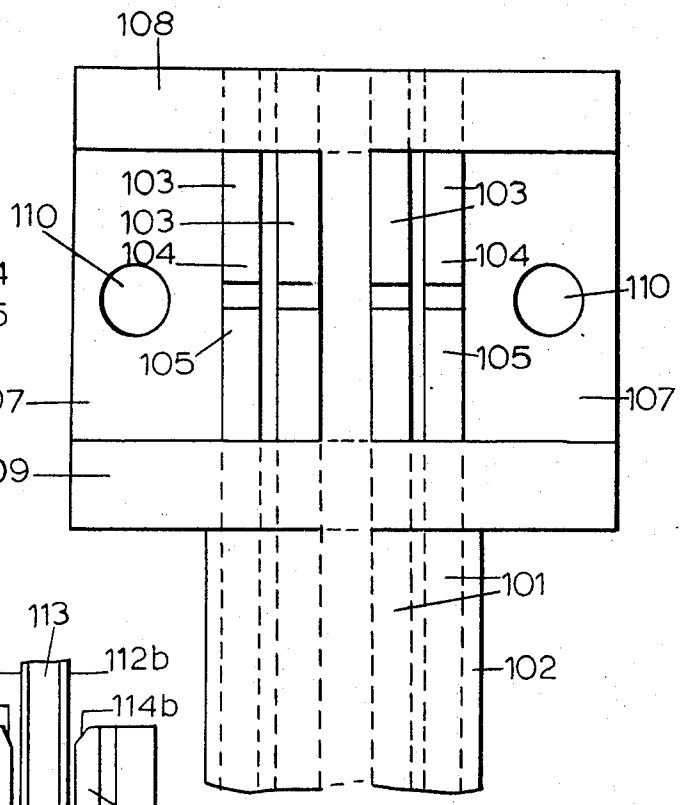

Fig.8

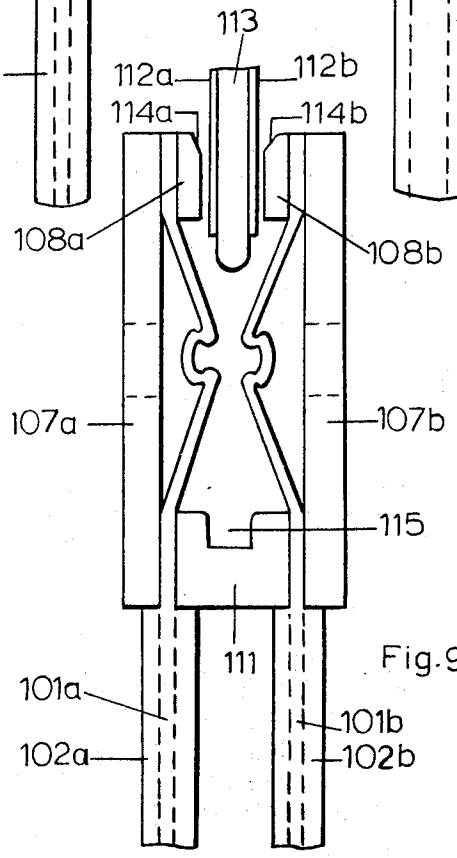

Fig.9.

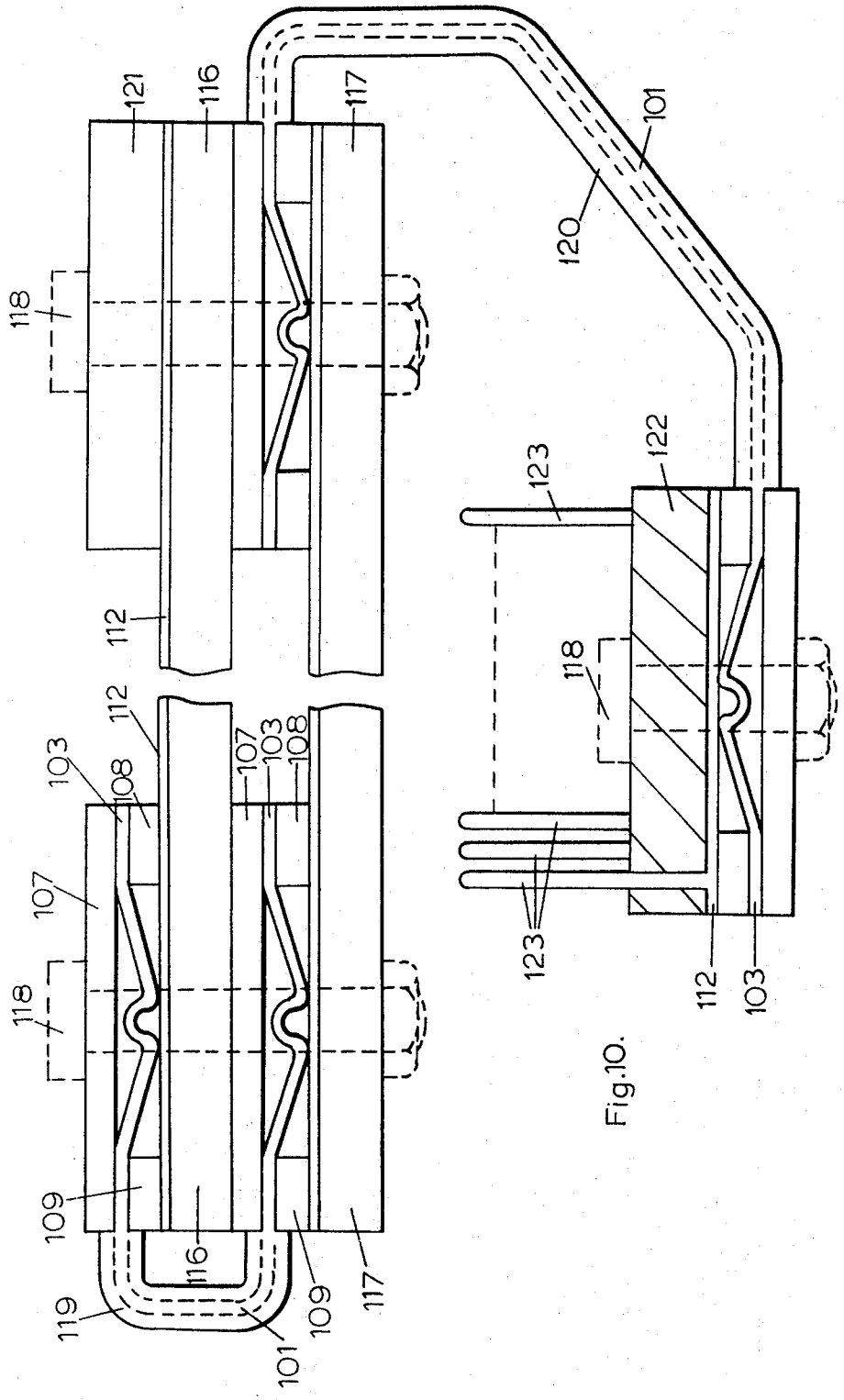

Fig.10.

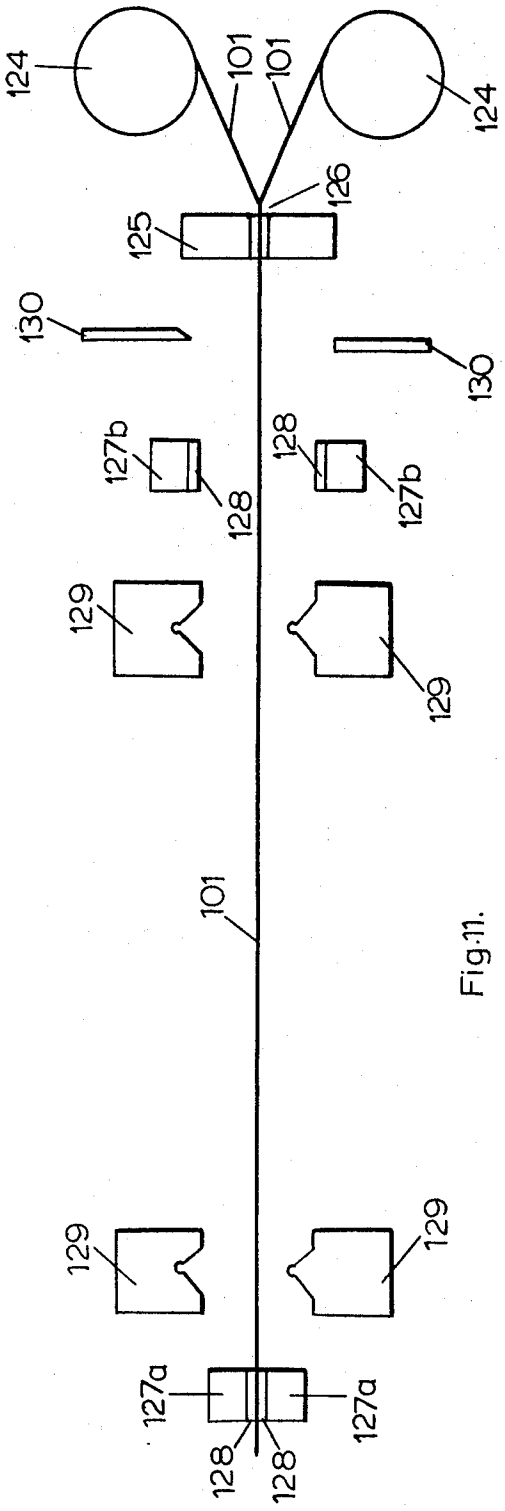
124
101
101
124
126
125
130
130
127b
128
128
127b
129
129
101
129
129
127a
127a
128
128

Fig.11.

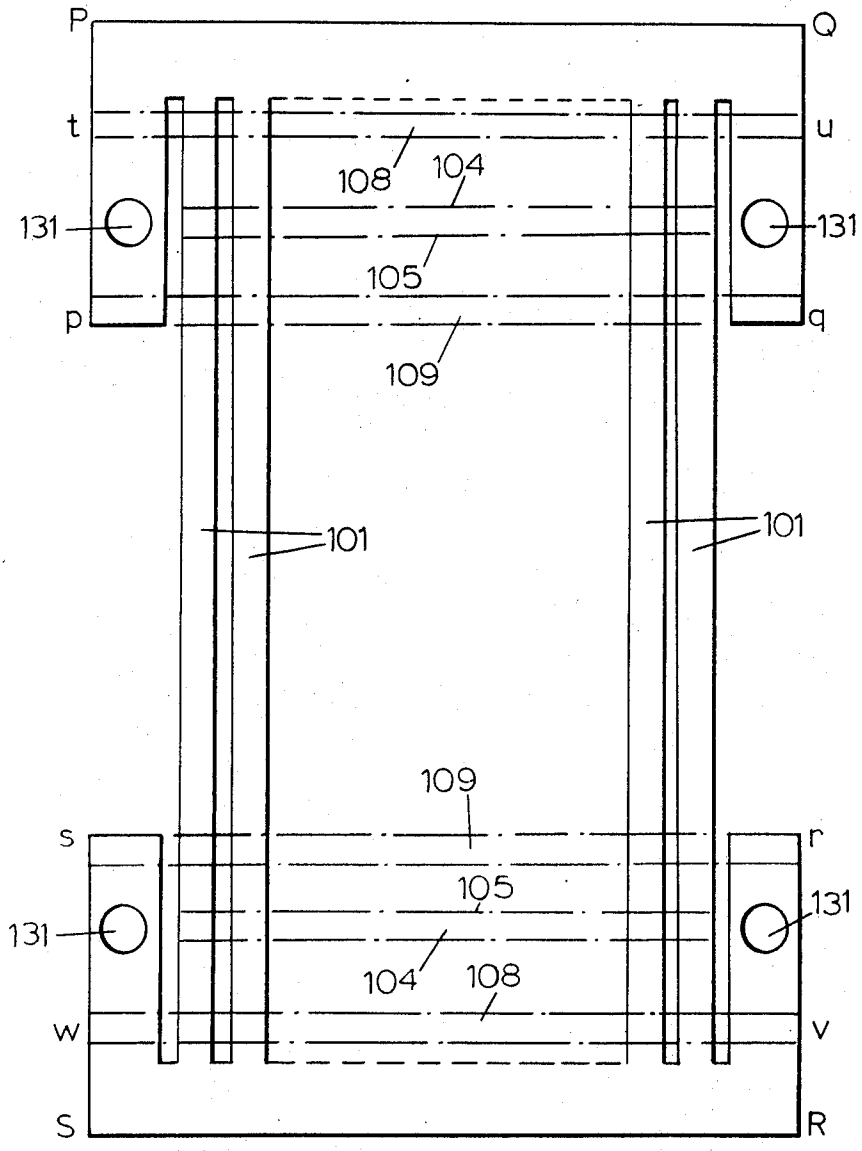
P
Q
t
u
108
104
131
131
105
p
q
109
101
101
109
s
r
105
131
131
104
108
w
v
S
R

Fig.12.

ELECTRICAL CONNECTION DEVICES

DISCLOSURE

This invention relates to electrical connecting devices and is particularly concerned with the problem of establishing electrical connection with or between circuits carried on printed circuit boards or in integrated circuit chips.

In many electrical connection devices using resilient contact making members, it is known to use bifurcated members so as to provide two contact making areas which can accommodate independently of each other to irregularities in a surface with which they mate. With circuits carried on printed circuit boards or in integated circuit chips, the surfaces or pads with which mating is required may be pitched at 0.25 mm or thereabouts, and with dimensions of this order bifurcation is not practicable. At this pitch, too, soldering is difficult, and the use of soldered connections is undesirable.

According to the invention there is provided an electrical connection device having a number of spaced parallel contact members each comprising a resilient strip of conductive material and each affording a pair of contact-making areas spaced from each other in the direction of the length of the strip.

The invention will now be described with reference to the accompanying drawings in which:

FIG. 1 is an end view of a first embodiment of the invention,

FIG. 2 illustrates a stage in the making of the first and some other embodiments of the invention,

FIG. 3 shows part of a stack of circuit boards in which second, third and fourth embodiments appear in end view,

FIG. 4 shows a fifth embodiment,

FIG. 5 is a sectional view of a sixth embodiment, and

FIG. 6 illustrates a stage in the making of the sixth embodiment,

FIGS. 7, 8 show a flat cable assembly in side and plan view respectively,

FIG. 9 shows an edge connector embodying two assemblies as shown in FIGS. 7, 8,

FIG. 10 shows flat cable assemblies used with a stack of boards carrying printed circuits or integrated circuit chips,

FIG. 11 shows apparatus suitable for manufacturing a flat cable assembly, and

FIG. 12 illustrates a further method of manufacturing an assembly.

The drawings are not to scale.

The first embodiment is in the form of an edge connector intended to establish electrical connection with circuits carried by a circuit board A. The circuits may be in the form of printed circuits, integrated circuits, or both, or in any other convenient form. Connection is established by means of conductors *a*, *b* - which are frequently called pads - on opposite surfaces of the board A. The connection device has a contact member 1*a*, 1*b* corresponding to each pad *a*, *b*. The contact members 1*a*, 1*b* are located opposite each other inside a channel member of insulating material. The channel member is made from two slabs 2*a*, 2*b* of a suitable insulating material, both joined along an edge by a distance piece 3 which is also of insulating material and forms the floor of the channel. The slabs 2*a*, 2*b* have the same dimensions as each other. The joining is effected by a bonding process, as will be considered again later in this description. At this stage it is desired to direct attention to the simple shapes of the slabs 2*a*, 2*b* and distance piece 3. The use of these simple shapes greatly simplifies problems incurred in manufacturing the connection device. In conventional manufacture the channel member is produced as a one-piece moulding, and it is difficult to ensure a dimensional accuracy compatible with the close pad pitching (for example 0.25mm) with which the present connection device is to be used. The slabs 2*a*, 2*b* and distance piece 3 are made of a material having high dimensional stability, preferably a material having a glass epoxy resin laminated structure. A jig is used to obtain accurate positioning during assembly.

Preferably the distance piece 3 has a recess 4 in one face, which receives the edge of the board A when the edge is fully inserted into the channel. As seen more clearly in FIG. 2, contact members 1*a* are closely spaced and parallel with each other. As each member 1*a* makes contact with a conductive pad *a* on the board A, the spacing of the members is the same as the pitch of the pads. As a member 1*b* is provided opposite each member 1*a*, the spacing of the members 1*b* is also equal to the pitch of the pads. Each of the contact members 1*a*, 1*b* comprises a strip of resilient, conductive material. The cross section of a contact member is determined by the mechanical and electrical performance required of the member. The length of a member exceeds the width of the slabs 2*a*, 2*b* in order to allow convolutions which will be discussed later. The contact members extend further to provide terminations 5*a*, 5*b* which project clear of the slabs, and which may be electroplated if desired.

Ignoring the terminations (e.g. 5*a*), a contact member (e.g. 1*a*) lies across the width of the slab 2*a*. The ends of the contact member 1*a* rest on one face of the slab 2*a* at opposite edges of the slab. Between its ends the member 1*a* is shaped to rise clear of this face, as if to form an apex. But instead of forming an apex, the member is convoluted towards the slab 2*a*. By reason of the convolution, two crests 6*a*, 7*a* are formed which, though spaced apart geometrically, are joined to each other physically and electrically by a loop 8*a*. The configuration of the loop 8*a* is of no importance provided the loop is long enough and flexible enough for both of the crests 6*a*, 7*a* to accommodate independently of each other to irregularities in the surface of the pad *a* when they make contact with the pad *a* on insertion of the board A into the channel. The two crests 6*a*, 7*a* offer a pair of contact making areas spaced from each other in the the direction of the length of the contact member 1*a*. It will be noted that the contact member 1*a* has been provided with two contact areas without any increase in the width of the member and without imposing restrictions on the spacing of adjacent members. The contact members may, therefore, be spaced more closely together than is possible with the conventional bifurcated construction in which the two contact areas are located side by side with each other. The contact members 1*b* have the same configuration, as the members 12, and lie across the slab 2*b*. The members 1*b* make contact with the pads *b* of the board A. In the finished connection device a contact member 1*a* is unable to touch the opposite contact member 1*b*. The first embodiment serves to connect circuits carried

by the board A with circuits external to the board if the latter are connected to the terminations 5*a*, 5*b*.

In manufacturing the connection device just described a jig is used which occupies the space which ultimately forms the channel. Opposite faces of the jig are slotted and each slot receives a contact member, the members 1*a* being received in the slots of one face and the members 1*b* in the slots of the other face. The terminations 5*a*, 5*b* all protrude from the bottom of the jig. The distance piece 3 is then inserted at the bottom of the jig. At the top of the jig two fixing pieces 9*a*, 9*b* are inserted. The fixing pieces 9*a*, 9*b* extend parallel to the distance piece 3, and are preferably of the same material as the slabs 2*a*, 2*b* and distance piece 3. In the finished connection device the clearance between the fixing pieces 9*a*, 9*b* is sufficient to allow the board A to pass between them. The tops of the fixing pieces 9*a*, 9*b* are bevelled to aid insertion of the board A.

The jig now holds the contact members 1*a*, 1*b*, the distance piece 3, and the fixing pieces 9*a*, 9*b* in the positions shown in FIG. 1. The contact members lie against two surfaces of the distance piece 3 and one surface of each of the fixing pieces 9*a*, 9*b*. Bonding material, conveniently a thermo-setting plastic tape, is spread over these four surfaces, and the slabs 2*a*, 2*b* are inserted into the jig. The jig and contents are then clamped and heated to the curing temperature at which bonding is effected. When bonding is complete, the distance piece 3, the slabs 2*a*, 2*b*, and the fixing pieces 9*a*, 9*b* form a unified mass. The contact members 1*a*, 1*b* are fixed in position by the bonding between the fixing pieces 9*a*, 9*b* and the slabs 2*a*, 2*b* and by the bonding between the slabs and distance piece 3.

If a contact member (e.g. 1*a*) becomes damaged after being bonded into position, it cannot be replaced. It is, therefore, convenient to form an edge connector as an assembly of modules, each module comprising a connection device as just described. In the event of damage to a contact member, only the module concerned need be replaced. The slabs 2*a*, 2*b* are pierced by holes 10*a*, 10*b* to accommodate pins used to locate a connection device in a desired position or to join adjacent modules to each other.

As shown in FIG. 3, three circuit boards B, C, D are arranged in a stack in which they are held by clamping means G and a dummy board or spacer F. Connection devices are positioned between adjacent boards.

A second embodiment of the invention is shown between the boards B, C. In the second embodiment a contact member 21 is bonded at the fixing pieces 23, 29 and a slab 22. The loop 28 has a simpler configuration than the loop 8 of the first embodiment. The termination 25 projects inwardly towards the centre of the stack, and is shanked and soldered to a conductive pad *b* on the lower face of the board B. The two crests of the contact member 21 make contact with a pad *a* on the upper face of the board C. The thickness of the fixing pieces 23, 29 is made adequate to prevent damage to the contact member 21 from excessive clamping pressure. The thickness of the slab 22 is determined by the clearance between the boards B, C. As shown, the second embodiment serves to interconnect circuits carried by the boards B, C. However, if the second embodiment is reversed, so that the termination 25 projects externally of the stack, connection may be established between external circuits and circuits on the board C. And if the embodiment is inverted after reversal, the external circuits are connected to circuits on the board B. The spacing of the contact members is equal to the pitch of the pads.

The third embodiment is shown between boards C, D, and is in effect a double-sided version of the second embodiment. In the third embodiment a slab 32 has a contact member 31*x* bonded to its upper face at fixing pieces 33*x*, 39*x* and another contact member 31*y* bonded to its lower face at fixing pieces 33*y*, 39*y*. If the terminations 35*x*, 35*y* project parallel to each other externally of the stack, the third embodiment affords connection between external circuits and circuits on the boards C, D. But if, the terminations 35*x*, 35*y* are cropped, bent towards each other and joined as shown at 35, the second embodiment serves to interconnect circuits carried by the boards C, D. The joint 35 affords a convenient access point for testing purposes. But if such access is not desired, the joint 35 may be sheltered by reversing the embodiment. The point at which the terminations 35*x*, 35*y* are cropped is determined by the thickness of the slab 32. Hence, by suitable cropping, uniform contact members may be used in conjunction with slabs 32 of different thicknesses. The spacing of the contact members is the same as the pitch of the pads.

The fourth embodiment is similar to the third embodiment in that it comprises contact members 41*x*, 41*y* bonded on opposite faces of a slab 42 at fixing pieces 43*x*, 49*x*, 43*y*, 49*y*. The two contact members 41*x*, 41*y* are made from a single strip, and a loop 45 appears in place of the join 35 of the third embodiment. Relatively to the third embodiment, the fourth embodiment is shown reversed so that the loop 45 occupies a sheltered position inside the stack. In manufacturing the fourth embodiment the shaping of the strip 41 to form the contact members must be directly related to the thickness of the slab 42. The fourth embodiment may be used to interconnect circuits carried by adjacent boards of a stack, but is shown as connecting circuits connected to a pad *b* of the board D to external circuits connected to a conductor *a* of a flat cable E. The spacing of the contact members is the same as the pitch of the pads.

The fifth embodiment shown in FIG. 4 interconnects circuits carried by adjacent boards H, I of a stack. The fifth embodiment includes a slab 52, and has a single strip 51 for each pair of contact members. A strip 51 is bonded centrally at a fixing piece 59*y* to the centre of the lower face of the slab 52, the ends of the strip being bonded at a fixing piece 59*x* to the centre of the upper face of the slab. The strip 51 adopts a figure-of-eight configuration which presents two crests 56*x*, 57*x* above the slab 52 and two crests 56*y*, 57*y* below the slab. The fixing pieces 59*x*, 59*y* are sufficiently thick to protect the strip 51 from damage by excessive clamping pressure applied to the boards H, I. The spacing of the contact members is the same as the pitch of the pads.

A sixth embodiment comprises two identical frames 11, 12 (FIGS. 5, 6) of insulating material superimposed on one another and enclosing a central window 13. Conveniently the frames 11, 12 are of the same material as the slabs 2*a*, 2*b* and distance piece 3. Spaced parallel contact members 61 comprising strips of resilient conductive material rest on the lower frame 12 and lie across the window 13. Within the window 13 each strip is convoluted in a manner that will be described later.

The strips **61** protrude beyond one side of the frame **12** to form terminations **65.** The spacing of the strips **61** conforms to the pitch of conductive pads with which the strips are to mate. After a thermo-setting plastic tape or other suitable bonding material has been spread over the frame **12,** the frame **11** is superimposed on the frame **12,** the strips **61** lying between the two frames. Bonding is then effected as described in relation to the first embodiment. A locating hole **10** pierces the frames **11, 12.** The convolutions of a strip **61** appear more clearly in FIG. **5.** From one side of the window **13,** the strip **61** extends in an arc which rises towards the centreline of the window, and descends on the other side of the centre-line to a point where a reverse curve is formed. At the zenith of the arc, the strip is looped to form two crests **66***a*, **67***a*. From the other side of the window **13,** the strip **61** extends in an arc which descends towards the centre-line of the window, and rises on the other side of the centre-line to a point where a reverse curve is formed. At the nadir of the arc, the strip is looped to form two crests **66***b*, **67***b*. The two reverse curves are joined by a straight portion **60.** The sixth embodiment is intended for use between adjacent boards of a stack, and the crests **66***a*, **67***a*, **66***b*, **67***b*, therefore, stand slightly proud of the frames **11, 12** when the embodiment is not being used. The thickness of the frames **11, 12** is related to the clearance between adjacent boards, but should be sufficient to protect the strips **61** from damage by excessive clamping pressure. As shown in the drawings, the sixth embodiment will establish connection between external circuits connected to the terminations **65** and pairs of circuits, each pair comprising one circuit carried by each board. If the terminations **65** are cropped off and are not used, the sixth embodiment interconnects circuits carried by adjacent boards of a stack.

Referring to FIGS. **7, 8** an electrical flat cable has a number of ways **101** each comprising a strip of resilient conductive material. The ways **101** are held in spaced parallel co-planar relationship by a flexible band **102** of insulating material. At one end of the flat cable, the ways **101** project from the insulating band **102** to form extensions **103.** Each extension **103** is integral with a way **101** and is shaped to serve as a contact member of a connection device in respect of the relevant way. To serve as a contact member, an extension **103** is angled as if to form two sides of a triangle meeting at an apex upstanding from the plane occupied by the ways **101.** But instead of forming an apex, the extension **103** is convoluted towards the plane of the ways **101.** By means of this convolution, two crests **104,105** are formed which, though spaced apart from each other in the direction of the length of the ways **101,** are joined to each other physically and electrically by a loop **106.**

The configuration of the loop **106** is of no importance, provided the loop is long enough and flexible enough for both of the crests **104, 105** to accommodate independently of each other to irregularities in the surface of a conductive pad. The extensions **103** are retained at their correct pitch by being bonded at their ends to an insulating slab **107,** the crests **104, 105** being upstanding from the slab. The retaining action of the bond is supplemented by strips **108, 109** of insulating material which are bonded to the slab **107** so that the ends of the extensions **103** are held captive between the strips and the slab. Conveniently the bonding is effected by means of a thermo-setting plastic tape. The width of the slab **107** exceeds that of the flat cable sufficiently to accommodate a pair of locating holes **110.**

In FIG. **9,** an edge connector is formed by placing two flat cable assemblies, as just described, so that the crests of the extensions of one cable face those of the other. The clearance between the crests belonging to the two cables is determined by a spacing strip **111** which is bonded to the slab **107***a* of the first cable and to the slab **107***b* of the second cable, strips **109** not being used. The spacing strip **111** lies adjacent to the ends of the insulating bands **102***a*, **102***b*, which may be bonded to the strip **111** if desired. The spacing strip **111** and the two slabs **107***a*, **107***b* when bonded together, form a channel-shaped body of insulating material such as is commonly found in edge connectors. The clearance between the crests belonging to the two cables is sufficient to enable physical and electrical contact to be established with pads **112***a*, **112***b*, on opposite faces of a board **113,** when the board has been inserted into the channel. The strips **108***a*, **108***b*, are dimensioned so as to allow the board **113** to enter the channel, and are chamfered at **114***a*, **114***b* to facilitate entry. In FIG. **9** the board **113** is shown partly inserted, but when fully inserted, the edge of the board **113** is received in a recess **115** in the spacing strip **111.** When the board **113** is fully inserted, each way of one of the cables is connected by a pair of crests to a corresponding pad **112***a*, and each way of the other cable is connected by a pair of crests to a corresponding pad **112***b*.

FIG. **10** shows a rudimentary stack of two boards **116, 117** each of which has conductive pads **112** on its upper face. The pads **112** are disposed conventionally in rows at opposite sides of the boards. The boards, which in practice are normally rectangular and exceed two in number, are secured in their stacked position by suitable clamping means such as nuts and bolts **118** located at the corners of the stack. The stack shown in FIG. **10** makes use of two flat cable assemblies **119, 120.**

The first assembly **119** has connection devices as already described at both ends of the flat cable, and serves to provide electrical connection between circuits carried on the board **116** and others carried on the board **117.** The slabs **107** and strips **108, 109** are dimensioned so as to provide suitable clearance between adjacent boards of the stack when a connection device is placed between two adjacent boards. When a connection device is so placed, the crests of the extensions **103** make contact with respective pads **112.** The holes **110** (FIGS. **7, 8**) of the slabs **107** are arranged to register with the holes (not shown) in the boards **116, 117** through which the bolts **118** pass. It may be noted that when the cable of the assembly **119** is laid out flat, the crests of the extensions **103** of the two connection devices of the assembly are upstanding from the plane of the ways **101** in opposite senses.

The second assembly **120** also has connection devices as already described at both ends of the flat cable. The assembly **120** serves to provide electrical connection with circuits carried on the boards of the stack from apparatus, e.g. power supplies, or circuits which are external to the stack. Such connection is afforded directly with circuits on the board **117,** and indirectly using the first assembly **119,** with circuits on the board **116.** One connection device of the second assembly

120 is placed between the boards 116, 117 as described in regard to the first assembly 112. A washer 121 is used as a spacer between the board 116 and the head of the relevant bolt 118. The other connection device of the assembly 120 is secured to a base 122 of insulating material by suitable clamping means such as nuts and bolts 118. The base 122, which is shown in section in FIG. 10, carries conductive pads 112 which engage crests of the extensions 103 as already described. Each pad 112 has a pillar 123 connected to or integral with it. A pillar 123 passes through the base 122 and extends beyond the base to afford a termination for soldering purposes. The pillars 123 are staggered relatively to each other so as to offer clearances which are adequate for soldering. It may be noted that when the cable of the assembly 120 is laid out flat, the crests of the extensions 103 of the two connection devices of the assembly are upstanding from the plane of the ways 101 in the same sense.

In practice, a stack will probably comprise more than two boards. Correspondingly more assemblies may be required. An assembly may be used to connect circuits on boards that are not adjacent to each other. The boards of a stack may carry pads 112 on both their upper and lower faces. In any connection device of an assembly, the sense in which the crests of the extensions 103 are upstanding will be chosen accordingly. As regards the second assembly 120, it may be desirable to dispense with the base 122 and the connection device to which the base is secured. In such an event the ways 101 would be connected to the apparatus concerned in some other suitable manner. Preferably the ways 101 and their extensions 103 are of a material which has a high yield strength and high electrical conductivity, for example beryllium copper. The areas of contact at the crests of the extensions 103 are conveniently plated with gold so as to obtain a low contact resistance. The ways 101 may be plated with a high conductivity material such as silver, if the ways are to be used for the transmission of high frequencies or large currents. Further, if transmission lines of matched impedance are required, these can be obtained by connecting alternate ways 101 to a source of earth potential.

The manufacture of a flat cable assembly will now be described. In a first method, a flat cable is formed whose ways 101 project at the ends to form extensions 103. At one or both cable ends as appropriate, each extension is then shaped to present two crests. The shaped extensions are placed in a jig. The slab 107 and strips 108, 109 are then presented, and a bonding process is carried out similar to that already described.

In a second method the use of a guide and clamps obviates the need for a jig. Apparatus appropriate to the second method is shown in FIG. 11. Conductive material for the ways 101 is presented in strips, each wound on a storage spool 124. From the spools 124, the strips 101 are taken to a guide 125, which has holes 126 spaced at the pitch required for the ways 101. A strip 101 is threaded through each hole 126. After threading, the ends of the strips 101 are gripped by a clamp 127*a*, which is then moved away from the guide 125 a distance sufficient to afford ways 102 of the desired length. The strips 101 are kept under tension, so that they lie parallel to each other at the pitch required for the completed cable. The clamp 127*a* has rubber gripping faces 128. Two pairs of dies 129 are then brought to bear on the ways 101. The dies are shaped and positioned to produce the double crested formation of the extensions 103 (FIG. 7) at the requisite points of the strips 101. The production of these formations is accompanied by a slight reverse movement of the clamp 127*a*, and a slight further pay-out of the spools 124. It will be appreciated that with the simple die-operation just described, the loop between the crests 104,105 cannot have reverse curves as shown in FIG. 7. However, more complicated dieoperation is possible and can be adopted if reverse curves are required. When the double crest formation has been produced, the ways 101 are clamped by another clamp 127*b* at the site near the guide 125 where the clamp 127*a* was first brought into use. The strips 101 are then severed by a guillotine 130. Bearers (not shown) are then connected to the clamps 127*a*, 127*b* to form a frame in which the shaped, severed ways 101 are held in the desired relative positions. The frame, complete with its ways 101, is then withdrawn. Plating of the contact areas at the crests, and plating of the ways are next carried out as may be required. The insulating band 102 (FIG. 7) is then moulded around the ways 101. Finally the connection devices are formed by bonding slabs 107 to strips 108, 109 as already outlined. After the bonding, the bearers and clamps are removed and used again.

In a third method of manufacture, the material for the conductive ways is presented in plate form. The plate is represented in FIG. 12 by the rectangle PQRS. By a suitable process such as chemical milling the plate is changed into a laminar shape in which a number of parallel strips 1 extend from the unchanged end margin PQ to the unchanged end margin RS. The central part of each side margin is removed, leaving stubs P*p*, Q*q* integral with the end margin PQ, and stubs R*r*, S*s* integral with the end margin RS. Each stub accommodates a locating hole 131. The strips 101, which ultimately become the ways 101 of the cable, are made slightly longer than the combined length of one way 101 and two extensions 103 (FIG. 7). The ways 101 are then pressed by means of dies so that crests are formed as indicated by the lines 4, 5 (FIG. 12). Plating of the contact areas at the crests, and plating the ways are next carried out as may be required. The insulating band 102 is then moulded around the ways 101. A bonding stage now follows. In preparation for this stage, and assuming all the crests rise upwardly from the plane of the plate PQRS, a slab 107 (FIG. 7) is placed underneath the stubs P*p*, Q*q*, with one edge lying along the line *pq* joining the stub extremities. The slab is dimensioned so that its opposite edge fails to reach the end margin PQ and lies along a line *tu*. The holes 10 (FIG. 7) of the slab 107 register with the holes 131 (FIG. 12) of the stubs *Pp*, *Qq*. Strips 108, 109 (see FIG. 7) are then placed above the stubs *Pp*, *Qq*. The strip 108 has one edge occupying the line *tu* and lies between this line and the holes 131. The strip 109 has one edge occupying the line *pq* and lies between this line and the holes 131. Another slab 107, strip 108 and strip 109 are placed similarly in relation to the stubs R*r*, S*s*, as indicated by the lines *rs*, *vw*. Bonding, conveniently using thermo-setting plastic tape, now takes place. After the bonding process, the end margins PQ, RS are removed by cropping along the lines *tu*, *vw*. The ways 101 are thereby isolated from each other, and the flat cable assembly is complete. The conductive areas surrounding the holes 131 are incorporated in the com-

plete assembly, but, since they have been isolated by the cropping action, they are electrically redundant.

The manufacturing methods just described may be suitable adapted if a flat cable assembly requires a connection device at only one end of the cable.

It is to be understood that the foregoing description of specific examples of this invention is made by way of example only and is not to be considered as a limitation in its scope.

What is claimed is:

1. An electrical connection device, which includes a slab of insulating material and a number of spaced parallel strips of conductive material arranged transversely of one face of the slab and protruding beyond an edge of the face; in which device, as regards each strip, the part of the strip lying between opposite edges of the face towards an apex, the rise being terminated short of the apex, on each side thereof, at a crest formed by a portion of the strip which is curved towards the face, the two curved portions of the strip being joined to each other by a loop portion accommodated in the clearance afforded by the rise of the strip from the face, and the two crests presenting two contact-making areas which are spaced from each other along the length of the strip one on each side of the apex.

2. A device as claimed in claim **1** in which the portions of the strips which protrude beyond the slab are flexible and are accommodated in a flexible band of insulating material.

3. An electrical flat cable assembly which includes a number of spaced, parallel, flexible conductors accommodated in a flexible band of insulating material; and, at each end of the cable, a connection device as claimed in claim **1**, each conductor comprising at each end a strip in the relevant connection device.

4. A device as claimed in claim **1** in which the slab has a glass epoxy resin laminated structure.

5. A device as claimed in claim **1** in which the slab has a further face opposite said face and a further strip of conductive material corresponding to each of said strips, the further strips being arranged in relation to said further face in the manner in which the said strips are arranged in relation to said face, the strips and the further strips protruding from edges which are included in one side of the slab, and each protrusion relating to a strip making contact with the further protrusion relating to the further strip which corresponds to said strip.

6. An electrical edge connector comprising an assembly of two devices as claimed in claim **1** disposed with their slabs parallel to each other, with the conductive strips of one device facing the conductive strips of the other device, and with the strips of both devices protruding from the assembly in the same sense, the assembly including a distance piece located between the slabs at the edges from which the strips protrude.

7. A connector as claimed in claim **6** in which the portions of the strips which protrude beyond the assembly are flexible and are accommodated in a flexible band of insulating material.

8. A connector as claimed in claim **6** in which the slabs and the distance piece have a glass epoxy resin laminated structure.

* * * * *

UNITED STATES PATENT OFFICE

CERTIFICATE OF CORRECTION

Patent No. 3,829,817 Dated August 13, 1974

Inventor(s) Alan Robert Beavitt

It is certified that error appears in the above-identified patent and that said Letters Patent are hereby corrected as shown below:

Column 9, line 17, insert --rises clear of the face-- between "face" and "towards" at the beginning of the line.

Signed and sealed this 3rd day of December 1974.

(SEAL)
Attest:

McCOY M. GIBSON JR.
Attesting Officer

C. MARSHALL DANN
Commissioner of Patents

FORM PO-1050 (10-69)

USCOMM-DC 60376-P69
★ U.S. GOVERNMENT PRINTING OFFICE : 1969 O—366-334.