March 2, 1937. F. W. MOEHLE 2,072,565

SUNDIAL

Filed Aug. 17, 1935

Fig 1

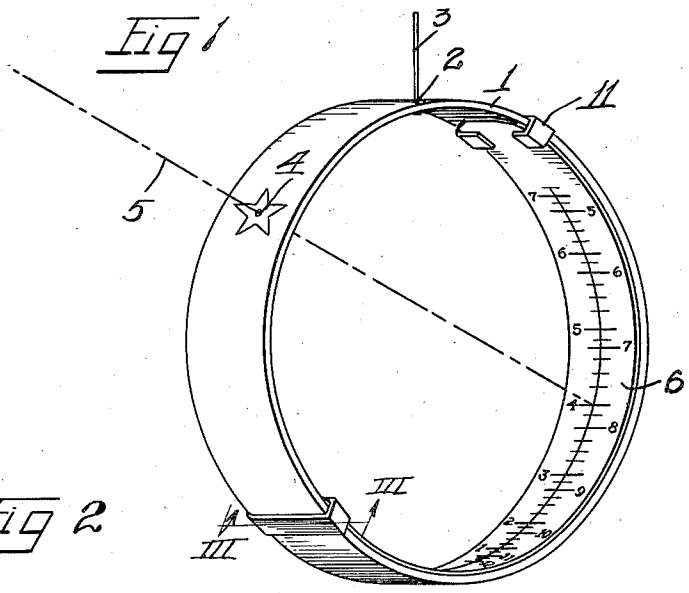

Fig 2

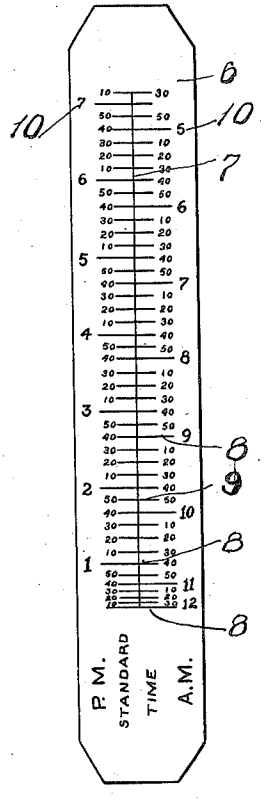

Fig 3

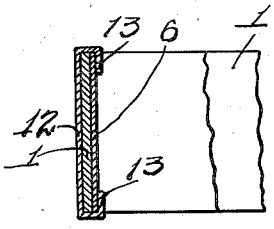

Inventor

Frederick W. Moehle,

By Charles O. Hills Attys

Patented Mar. 2, 1937

2,072,565

UNITED STATES PATENT OFFICE

2,072,565

SUNDIAL

Frederick W. Moehle, Attleboro, Mass., assignor to The Robbins Co., Attleboro, Mass., a corporation of Massachusetts

Application August 17, 1935, Serial No. 36,627

1 Claim. (Cl. 33—62)

The present invention relates to a sun dial, and more particularly to a readily portable or pocket sun dial which may be conveniently carried on the person.

An object of the present invention is to provide a pocket sun dial whereby apparent solar time may be observed.

Another object of the present invention is to provide a pocket sun dial with a calibrated time indicating card so mounted as to be adjustable to compensate for ascertainment of time in different meridian positions, and also for different seasons of a year.

The sun dial of the present invention may be conveniently carried on the person, and once having been adjusted for any particular meridian position, and season, may be utilized at any hour of daylight to indicate solar time.

The above, other and further objects of the present invention will be apparent from the following description and accompanying drawing.

An embodiment of the present invention is illustrated in the accompanying drawing, and the views thereof are as follows:

Figure 1 is a perspective view of the sun dial of the present invention, which is adapted to be suspended and swing, and shown in partly swung position to illustrate the relationship between the time card and the aperture in the dial through which the sun's rays enter against the card.

Figure 2 is a development of the card utilized.

Figure 3 is a sectional view taken substantially in the plane of the line III—III of Figure 1, illustrating certain details of construction.

The drawing will now be explained.

The sun dial, as illustrated herein, comprises a ring 1, of aluminum, brass or other suitable material, having an aperture 2 in it whereby it may be suspended as by a cord 3, for use. Angularly spaced from the aperture 2, a distance of approximately 40° to 45°, is an aperture 4, through which the sun's rays, indicated by the line 5, may enter and strike the time card 6, to approximate the apparent solar time observed.

The calibrated time strip or card 6 is provided with indicia representing time for fifteen hours arranged on the card with the hours 5 to 12 inclusive for A. M. time as on one side of a median line 7 and the indicia for the hours from 1 to 7 P. M. time arranged on the opposite side of the median line. Crossing the median line 7 are a plurality of perpendicular lines, represented generally at 8, to indicate the hourly divisions of time, and other intermediate lines 9 to indicate divisions of hourly time, such as intervals of ten minutes. Preferably, for ease in observation, the lengths of the lines 8 and 9 are different. In addition the hour lines 8 have characteristics or numerals 10 representing the hours of the day, to facilitate observation.

The card is marked to indicate A. M. and P. M. time, as may be observed by reference to Figure 2, and also the card is marked as "Standard time."

In order to mount the card 6 in the ring 1, so as to be adjustable along the inner periphery of the ring, sliding clips 11 are provided. Each of the clips 11 includes a part 12 to bear against the outer periphery of the ring 1, and inturned lugs 13 to engage, in slightly spaced relation to the inner periphery of the ring, the extremities of the card 6 when installed, as shown in Figure 1.

The sun dial is used by suspending it from the cord 3, held in the hand of the observer, and the plane of the dial is turned so that the sun's rays fall directly on the aperture 4, entering such aperture and striking the card 6 at some point. Where the sun's rays 5 strike the card 6, a small dot of light appears, depending of course on the size of the aperture 4. This dot then indicates the apparent solar time on the dial.

The observer, if the card 6 is not adjusted in the dial, to approximately represent the apparent solar time of the meridian position of the observer, slides the clips 11 in such a manner as to loosen the card 6, and then the card is moved endwise to so position it with reference to the aperture 4, so that any ray from the sun entering the aperture will indicate approximately the apparent solar time at the moment of observation, which adjustment may be checked by a watch or clock.

It will thus be observed that by means of the sun dial of the present invention, the dial may be made in quantity lots and utilized in any part of the world for indicating apparent solar time. The use of the adjustably mounted time card 6, makes this possible, as the card may be adjusted to suit any point of observation on the earth's surface.

When using the sun dial for determination of A. M. time, the aperture 4 is towards the east, while for determining P. M. time, it is toward the west. In other words, the ring is so positioned that the aperture 4 is towards the sun.

The adjustability of the card 6 enables use of but a single card for different meridian positions and also for different seasons of the year.

I am aware that many changes may be made and numerous details of construction may be varied through a wide range without departing

from the principles of this invention, and I, therefore, do not purpose limiting the patent granted hereon otherwise than necessitated by the prior art.

The invention is claimed as follows:

A pocket sun dial comprising a flat annular band having means whereby it is adapted to be suspended in a vertical plane with the plane thereof coincidental with the direction of the sun from the abserver, said band having means defining a pinhole aperture therethrough at a fixed point for the projection of sunlight therethrough to an opposed inner face of the band, a graduated strip movably seated on said opposed inner face, means to removably secure said strip to said band, said means comprising clips slidable on the outer face of said band and having inturned end portions to overlie marginal portions of said strip for guided movement of said strip.

FREDERICK W. MOEHLE.