Oct. 4, 1955 J. SMITHLINE 2,719,594

STETHOSCOPES

Filed Jan. 3, 1952

Fig. 1.

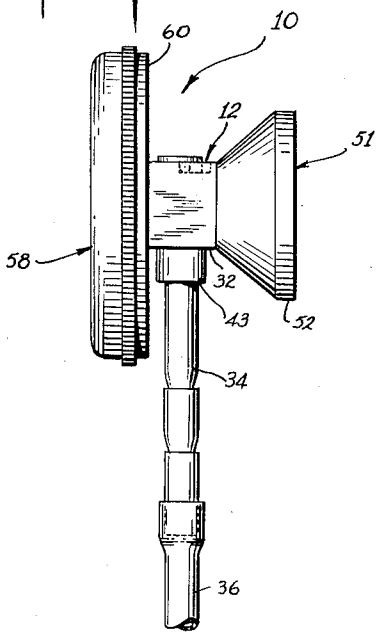

Fig. 2.

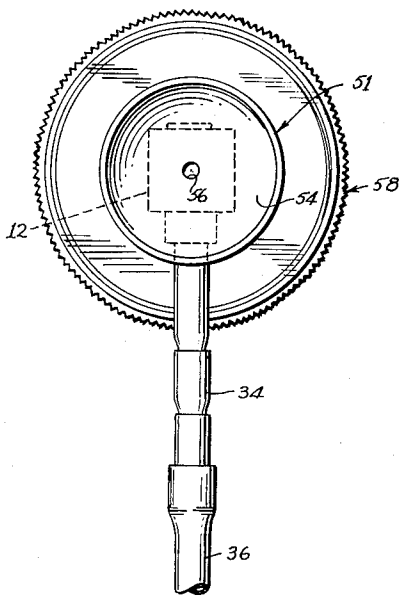

Fig. 3.

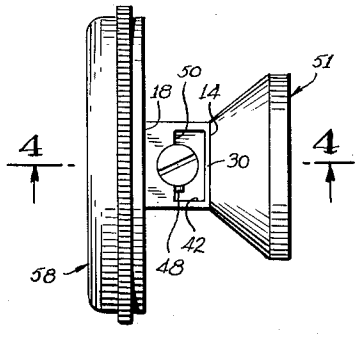

Fig. 4.

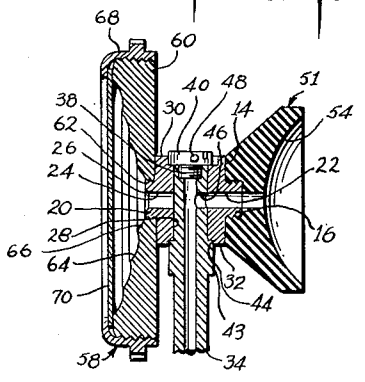

INVENTOR.
JACOB SMITHLINE

BY

ATTORNEY

United States Patent Office

2,719,594

Patented Oct. 4, 1955

2,719,594

STETHOSCOPES

Jacob Smithline, Brooklyn, N. Y.

Application January 3, 1952, Serial No. 264,697

3 Claims. (Cl. 181—24)

This invention relates to stethoscopes.

It is an object of the present invention to provide a combination Ford and Bowles stethoscope of improved construction which constitutes relatively few and simple parts, is easy to use and can be manufactured at a comparatively low cost.

It is another object of the present invention to provide a combination Ford and Bowles stethoscope having a rugged and compact construction and which is efficient in operation to a high degree.

It is a further object of the invention to provide a combination Ford and Bowles stethoscope which provides a louder and clearer sound indication than heretofore.

It is still another object of the present invention to provide novel and improved means to selectively employ the Ford bell or the Bowles chamber by merely flipping the stethoscope about the tube, said means being simple in construction and operation.

Other objects of the invention in part will be obvious and in part will be pointed out hereinafter.

The invention accordingly consists in the features of construction, combinations of elements and arrangement of parts which will be exemplified in the construction hereinafter described and illustrated, and of which the scope of application will be indicated in the appended claims.

In the accompanying drawings in which is shown one of the various possible embodiments of the invention,

Fig. 1 is a side view of a stethoscope constructed in accordance with the present invention;

Fig. 2 is a front view thereof;

Fig. 3 is a top view thereof; and

Fig. 4 is a sectional view taken substantially along the line 4—4 of Fig. 3.

Referring now in detail to the drawings, the reference numeral **10** indicates a stethoscope embodying the present invention. Said stethoscope includes a metal valve body **12** of generally cubical shape. The front face **14** of the body has integrally and centrally formed thereon a raised and threaded boss **16**. The rear face **18** of the body likewise is provided with an integral raised and threaded boss **20**. The two bosses **16**, **20** are in registry and are provided with straight passageways **22**, **24** of the same diameter. Said passageways are aligned and extend inwardly along a line passing through the center of the valve body, the passageways being perpendicular to the parallel faces **14**, **18** of said body. The passageways may be formed by a simple drilling operation. Desirably, the outer end of one of the passageways, e. g. the passageway **24**, is chamfered, as at **26**, for a reason which later will be apparent.

The inner ends of the two passageways **22**, **24** terminate at a central cylindrical valve cavity **28** the axis of symmetry of which intersects and is perpendicular to the aligned longitudinal axes of the bores **22**, **24**. The cylindrical cavity extends entirely through the valve body from the side face **30** to the opposite bottom face **32** thereof.

A hollow cylindrical tube **34** snugly fits into the cavity

28 to a point substantially above the passageways **22**, **24**. Said tube is adapted to have frictionally fitted on the bottom thereof a conventional rubber tubing **36** which extends to the usual aural fork (not shown) for connection to ear pieces.

The tube is retained in the cavity **28** as follows: the top of the tube is tapped to receive a threaded plug **38** having a head **40** rotatably seated on the base of a recess **42** in the top of said valve body.

The top of the tube projects slightly above the base of the recess, a shoulder **43** on the tube serving to prevent the tube from shifting upwardly. Said shoulder abuts against the base of a recess **44** on the bottom face of the valve body. The tube is assembled with the stethoscope by insertion into the cavity and screwing in of the plug. The tube is rotatable in the cavity and the plug cannot be tightened so much as to impede such rotation because part of the tube projects above the base of the recess **42**.

The tube **34** is provided with a passageway **46** perpendicular to its vertical bore and arranged to be aligned selectively with either passageway **22** or **24** by rotation of the stethoscope. The plug does not reach the passageway **46**.

Means is provided on the head of the plug to stop rotation of the tube in one direction with passageways **46** and **22** aligned, and in the other direction with passageways **46** and **24** aligned. Said means constitutes a pin **48** extending radially from the plug head **40** and adapted to abut a side wall **50** of the opening **42** on either side of said head.

The stethoscope includes a Ford bell **51** made from a synthetic plastic, e. g., an acrylic resin or a phenol formaldehyde condensate. The bell has a flaring head **60** the outwardly facing side of which is formed in the shape of a large rounded depression **54**. The inwardly facing side of the bell is provided with a tapped bore that meshes with the threaded boss **16**. Said bore communicates with a passageway **56** that extends inwardly from the center of the rounded depression **54** and is aligned with the passageway **22**.

Mounted on the other boss **20** is a Bowles chamber **58** which includes a head **60** having a central tapped aperture **62** that meshes with the threaded boss **20**. The outwardly facing side of the head is fashioned with a series of stepped concentric annular concave surfaces **64** centering about the aperture **62**. The smallest of these annular surfaces has a diameter slightly larger than that of said aperture and is connected therewith by a chamfered surface **66**. The counterbore **26** approximately constitutes a continuation of this surface. The head **60** is of a circular configuration and its rim is threaded to receive a tapped collar **68** that presses a sound diaphragm **70** against the forwardly facing side of the head. The inwardly facing side of the head is plane and is parallel to a plane including the axis of symmetry of the cavity and the longitudinal axis of the tube **34**.

When passageway **46** is aligned with passageway **22**, the Ford bell is operative and sound picked up by it will be heard at the earphones. When passageway **46** is aligned with passageway **24**, the Bowles chamber will be operative. Either the bell or chamber can be used by simple rotation of the stethoscope while holding the tube **34** stationary. The stop will insure selection of an operative position.

It thus will be seen that there has been provided a stethoscope which achieves all the objects of the invention and is well adapted to meet the conditions of practical use.

As various possible embodiments might be made of the above invention, and as various changes might be made in the embodiment above set forth, it is to be understood

that all matter herein described, or shown in the accompanying drawings, is to be interpreted as illustrative an not in a limiting sense.

Having thus described the invention, there is claimed as new and desired to secure by Letters Patent:

1. A stethoscope comprising a valve body, a bell for local auscultation, a chamber having an opening covered by a sounding diaphragm for general auscultation, means to detachably secure said bell and chamber to opposite sides of said valve body, said body having passageways extending inwardly thereof from said bell and chamber, said passageways being in alignment, said body having a cylindrical cavity the axis of symmetry of which intersects the longitudinal axes of said passageways and is perpendicular thereto, said passageways communicating with said cavity, a hollow tube rotatable in said cavity, enlargements on said tube, one enlargement being located near the top of the tube and abutting the top face of the valve body and the other enlargement being located below the valve body and abutting the bottom face thereof, whereby the tube is retained in said cavity, said tube having a transverse passageway communicating with the interior of the tube, said transverse tube passageway lying in that longitudinal plane of the passageways in the valve body which is perpendicular to the longitudinal axis of the tube, and means to stop rotation of the tube with its passageway selectively aligned with either of the passageways in the valve body whereby either the bell or the chamber may be rendered operative by rotation of the tube.

2. A stethoscope comprising a valve body, a bell for local auscultation, a chamber having an opening covered by a sounding diaphragm for general auscultation, means to detachably secure said bell and chamber to opposite sides of said valve body, said body having passageways extending inwardly thereof from said bell and chamber, said passageways being in alignment, said body having a cylindrical cavity the axis of symmetry of which intersects the longitudinal axes of said passageways and is perpendicular thereto, said passageways communicating with said cavity, a hollow tube rotatable in said cavity, enlargements on said tube, one enlargement being located near the top of the tube and abutting the top face of the valve body and the other enlargement being located below the valve body and abutting the bottom face thereof, whereby the tube is retained in said cavity, said tube having a transverse passageway communicating with the interior of the tube, said transverse tube passageway lying in that longitudinal plane of the passageways in the valve body which is perpendicular to the longitudinal axis of the tube, and means to stop rotation of the tube with its passageway selectively aligned with either of the passageways in the valve body whereby either the bell or the chamber may be rendered operative by rotation of the tube, said stop means comprising a pin abutting a vertical wall on the top of the valve body when the tube passageway is aligned with either passageway in the valve body.

3. A stethoscope comprising a valve body, a bell for local auscultation, a chamber having an opening covered by a sounding diaphragm for general auscultation, means to detachably secure said bell and chamber to opposite sides of said valve body, said body having passageways extending inwardly thereof from said bell and chamber, said passageways being in alignment, said body having a cylindrical cavity the axis of symmetry of which intersects the longitudinal axes of said passageways and is perpendicular thereto, said passageways communicating with said cavity, a hollow tube rotatable in said cavity, the tube projecting slightly above the top of the valve body, a plug screwed into the top of the tube, said plug having a head seated on top the the valve body, whereby the tube is retained in the cavity against downward movement, a shoulder on said tube, said shoulder being seated on the bottom of the valve body whereby to prevent movement of the tube upwardly, said tube having a transverse passageway communicating with the interior of the tube, said transverse tube passageway lying in that longitudinal plane of the passageways in the valve body which is perpendicular to the longitudinal axis of the tube, and means to stop rotation of the tube with its passageway selectively aligned with either of the passageways in the valve body whereby either the bell or the chamber may be rendered operative by rotation of the tube.

References Cited in the file of this patent

UNITED STATES PATENTS

965,174	Fuchs	July 26, 1910
1,708,398	Pilling	May 5, 1927
2,271,467	Smithline	Jan. 27, 1942
2,505,124	Lepeschkin	Apr. 25, 1950
2,513,827	Tynan	July 4, 1950

OTHER REFERENCES

Pilling & Son Co., Catalog of Instruments and Appaparatus for Surgeons and Hospitals, 1932–1933 edition, page 155.