United States Patent [19]

Zeiser

[11] **3,788,184**

[45] **Jan. 29, 1974**

[54] **PRECISION ELECTRONIC TUNING DEVICE**

[76] Inventor: **Donald K. Zeiser,** 7425 Parkdale, Clayton, Mo. 63105

[22] Filed: **June 29, 1972**

[21] Appl. No.: **267,648**

[52] **U.S. Cl.** ..... **84/454,** 324/79 R

[51] **Int. Cl.** **G10g 7/02**

[58] **Field of Search**.... 324/79 R, 79 D, 83 R, 83 A, 324/83 D, 78 Z, 78 J, 78 N, 78 Q, 78 R; 84/1.01, 454, 455

[56] **References Cited**

UNITED STATES PATENTS

2,878,448	3/1959	Maxey	324/78 Z X
2,896,161	7/1959	Fox	324/79 R
3,472,116	10/1969	Schott	84/454

Primary Examiner—Richard B. Wilkinson
Assistant Examiner—U. Weldon

[57] **ABSTRACT**

A precision electronic tuning device for tuning a musical instrument, having an audio pre-amplifier, a frequency to voltage converter, a D.C. attenuator and a differential voltmeter, the differential voltmeter connected between the outputs of the D.C. attenuator and the frequency to voltage converter as a null indicator to indicate the voltage difference between the two. The audio pre-amplifier amplifies the signal from the musical instrument and its output is connected to the input of the frequency to voltage converter. The frequency to voltage converter changes the amplified frequency to voltage proportionally.

21 Claims, 4 Drawing Figures

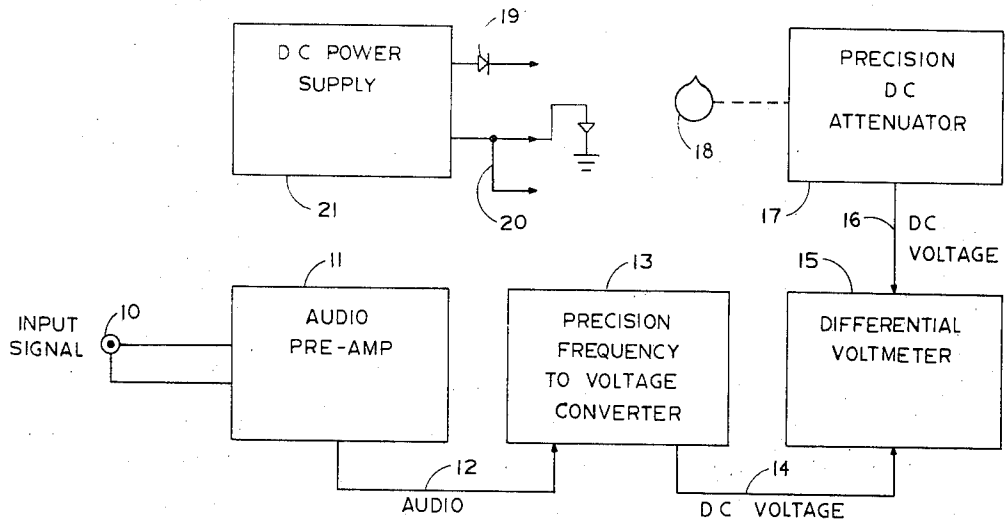

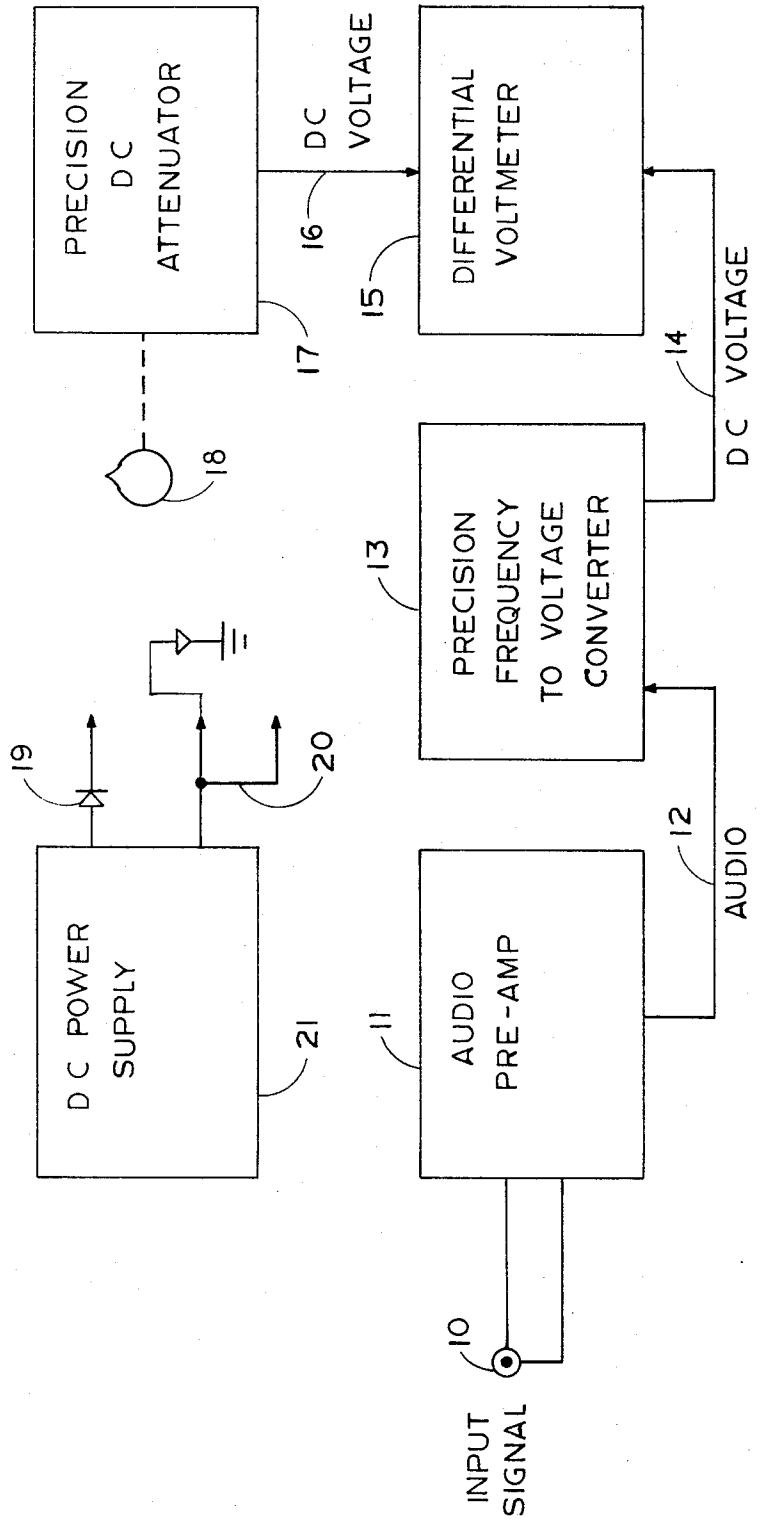
PRECISION DC ATTENUATOR
DC VOLTAGE
DIFFERENTIAL VOLTMETER
16
15
17
18
14
DC VOLTAGE
PRECISION FREQUENCY TO VOLTAGE CONVERTER
13
19
20
DC POWER SUPPLY
21
AUDIO PRE-AMP
11
12
AUDIO
10
INPUT SIGNAL

FIG. 1

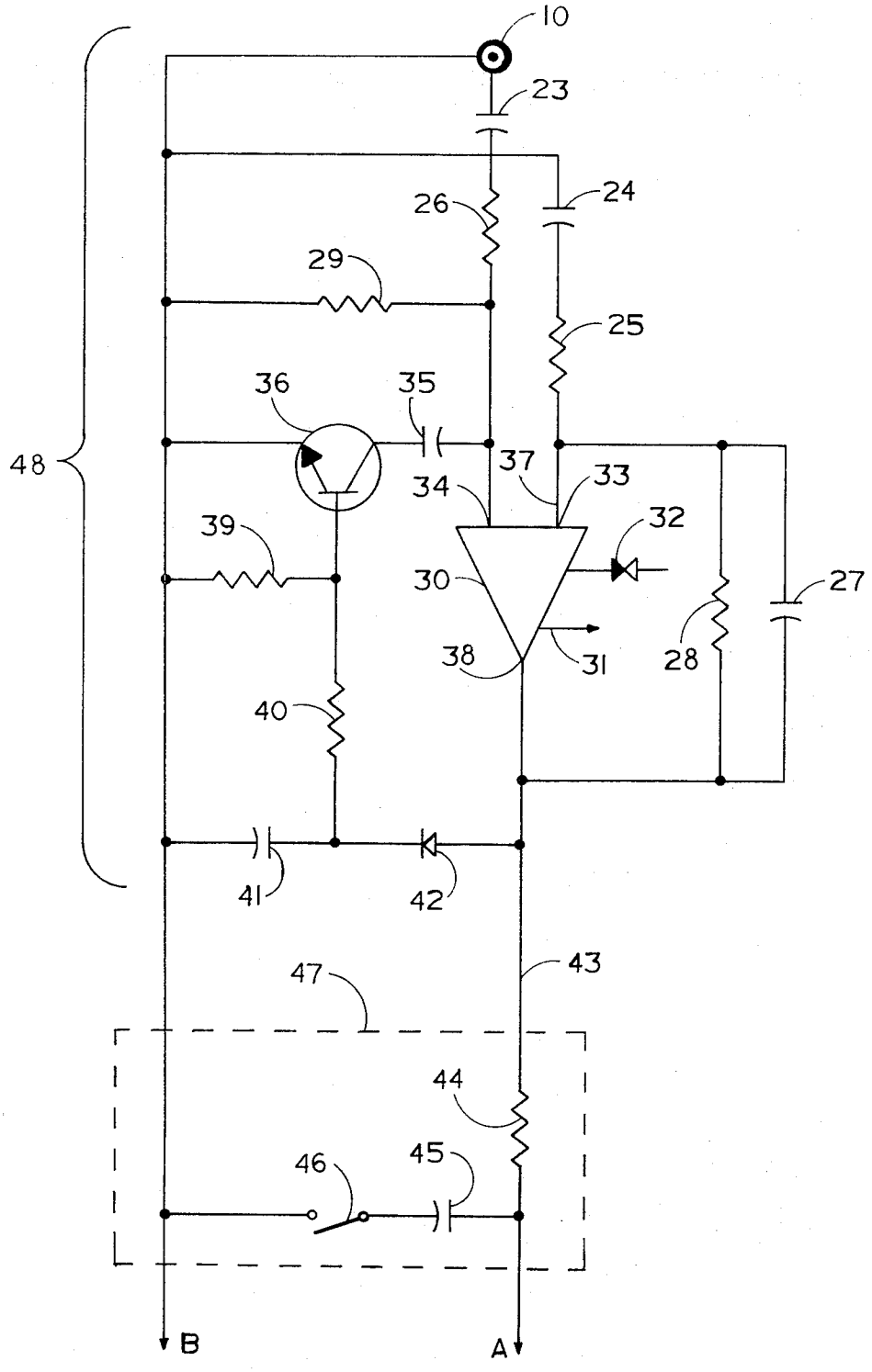
10
23
24
26
29
25
36
35
48
37
33
34
32
39
30
27
38
31
28
40
41
42
43
47
44
46
45
B
A

FIG. 2

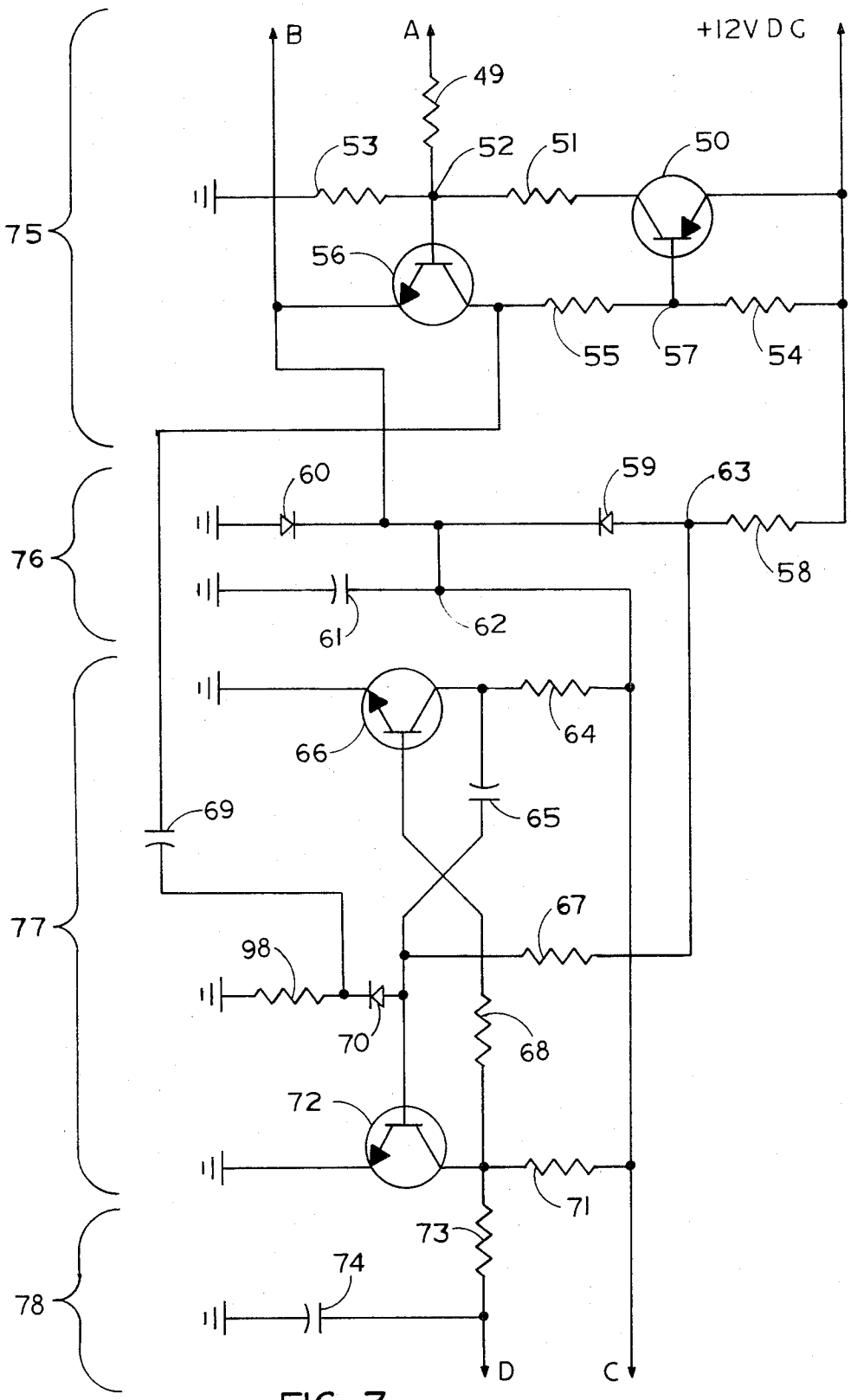
B
A
+12V D C
49
53
52
51
50
56
55
57
54
75
60
59
63
58
61
62
76
66
64
65
69
67
77
98
70
68
72
71
73
74
78
D
C

FIG. 3

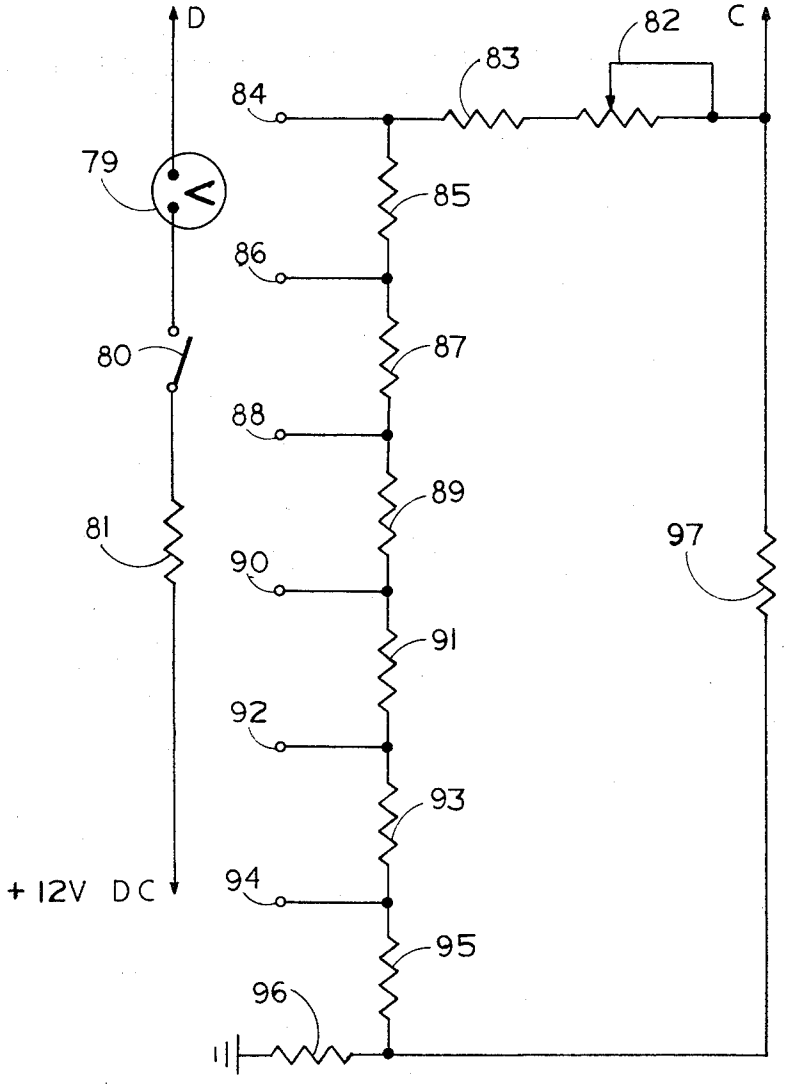

FIG. 4

PRECISION ELECTRONIC TUNING DEVICE

BACKGROUND OF THE INVENTION

This disclosure outlines a tuner for a guitar, although this principle can be used to tune any type musical instrument.

The classic method for tuning musical instruments is to use a reference tone which is sought to be matched by the person tuning the instrument. Thus the accuracy of tuning is dependent on the ability of a person to distinguish between two tones or frequencies, therefore requiring concentration, taking considerable time, and having an amount of error due to the individual's audio distinguishing ability

Pitch pipes are used, but when used, still have to be compared to the musical instrument through human interpretation. Even electronic devices that emit tones have to be compared by ear, and have different tonal characteristics than the sound produced by a musical instrument, making these tones difficult of comparison.

The principal object of this precision electronic musical instrument tuner is to provide a device which enables a musical instrument to be tuned very accurately and quickly, with the elimination of human ear interpretation.

Another object of this invention is to provide a device that can be used by any amateur to tune musical instruments very accurately and quickly. To explain this object more fully, not only an amateur, but even a completely deaf person can tune an instrument just as, or more quickly and accurately, than a professional musical instrument tuner.

Other objects and many of the attendant advantages of the present invention will become readily apparent from the following detailed description taken in conjunction with the drawings.

SUMMARY OF THE INVENTION

In this invention, the musical instrument output is electrically coupled to an audio pre-amplifier, which amplifies the signal and filters out some unneeded harmonics. The output of the audio pre-amplifier is connected to the input of a precision frequency to voltage converter, and this converter, which consists of an amplitude detector, shunt zener voltage regulator, temperature compensated monostable multivibrator, and an integrator, changes the varying incoming frequencies into precise and exact voltages proportionally. The output of this converter may be in the vicinity of 10 millivolts per H_z.

The resistors in the precision D.C. attenuator are calculated to give an exact direct current voltage. The number of precision resistors used in the attenuator equals the number of notes of the musical instrument being tuned. In the case of a guitar, a six position switch selects which voltage from the attenuator is compared to the frequency to voltage converter, through the instrumentality of the differential voltmeter.

Therefore, an exact 82.3 c.p.s. (low E string of guitar) signal goes into the pre-amplifier, is amplified then changed into voltage, which would be 0.823 volts D.C., and is then connected to one side of the differential voltmeter. One position of the switch is connected to the attenuators precision resistor whose output is 0.823 volts D.C., and connected to the other side of said voltmeter. Thus the voltage to each side of the differential

voltmeter is equal, and a null or zero reading is obtained, indicating the musical instrument is on tune. An increase or decrease of fall of the frequency of the musical instrument will show a rise or fall deflection on the meter.

the time interval formula used for the frequency to voltage converter is,

$T = RC \log [2V_{CC} - V_{CE}(\mathrm{Sat}_1) - V_{BE}(\mathrm{Sat}_2)/V_{CC} - V_{BE}(Th_2)]$

the threshold (Th) is the point where the transistor commences conduction; (Sat) represents the saturation voltage of the transistors.

BRIEF DESCRIPTION OF THE DRAWINGS

FIG. 1 is a schematic block diagram illustrating the operational circuitry in the tuning device;

FIG. 2 schematic drawing showing the audio pre-amplifier portion of the device;

FIG. 3 schematic drawing showing the precision frequency to voltage converter; and

FIG. 4 is a schematic drawing showing the precision D.C. attenuator and differential voltmeter components of the invention.

DESCRIPTION OF THE PREFERRED EMBODIMENT

Referring to FIG. 1, input jack receives an audio signal from the musical instrument, which is the input of the pre-amplifier **11.** The audio pre-amplifier, which has an automatic gain control circuit, and a low pass filter, amplifies the input signal, whose output is an amplified signal as at **12.** The precision frequency to voltage converter changes this signal from frequency to voltage proportionally, and its output is 10 millivolts per Hz, at least in this preferred embodiment, although other value may be contemplated. The output of the frequency to voltage converter is a direct current voltage, as at **14,** and is connected to one side of a voltmeter **15,** more aptly defined as a zero center differential voltmeter. The other side of said voltmeter connects to attenuator **17,** a D.C. attenuator with an exact D.C. voltage output representative of 10 millivolts per H_z. In other words, one output of attenuator **17** may be 0.823 volts, which would indicate a null on the meter if the pre-amplifier's input is 82.3 c.p.s.; or low E on a guitar musical scale.

Switch **18** has the same number of positions as notes of the musical instrument. (For a guitar, a seven position switch may be used. Six positions representing the six strings and one position for a battery check.) Number **19** is the positive power supply terminal, and number **20** represents the negative power supply terminal. Diode **19** is a reverse polarity protection device, designed to protect the circuit if it should be connected improperly. Number **21** represents the 12 volt D.C. battery power supply, preferably eight size AA batteries, or can be operated from line using a transformer and a rectifier.

Input signal jack **10,** as also shown also in FIG. **2,** accepts the musical instrument signal, with one side connected to positive 6.2 volts D.C. regulated, as along line B, and the other side to capacitor **23** which is in series connected to resistor **26,** which is connected to input **34,** the positive input of the operational amplifier **30.** The cathode side of capacitor **24** is connected to line B, as shown in FIG. **2,** which is connected in series with resistor **25,** whose other side is connected to feedback

resistor 28, and input 33, which is the inverting input of operational amplifier 30. Circuit line 37 indicates a positive 6.2 volts D.C. Capacitor 27 is connected in parallel with resistor 28. Terminal 31 indicates the positive power supply input and terminal 32 indicates the negative power supply input of the operational amplifier 30. Resistor 29 is connected in series between the positive input 34 and line B. Capacitor 35 is connected between the noninverting input 34 and collector of transistor 36, with cathode of capacitor 35 toward collector of transistor 36, whose emitter of said transistor is connected to line B. Resistor 39 is connected in series between the base of transistor 36 and line B, and resistor 40 is connected between the base of transistor 36 and the cathode side of diode 42. Anode side of diode 42 is connected to output 38, the operational amplifier's output. The positive side of capacitor 41 joins the cathode of diode 42, and the negative side of capacitor 41 joins line B. Transistor 36 is the automatic gain control transistor. Represented by circuit line 43 is the audio pre-amplifier's output, and this is 6.2 volts D.C., 2 volts peak to peak. Outlined portion 47 indicates an optional low pass filter consisting of a resistor 44, which is connected between operational amplifier output 38 and the frequency to voltage converter's input, and capacitor 45 connected between resistor 44 and resistor 49. Switch 46 is optional and engages the filter when closed. Number 48 generally indicates that part of the circuit that represents the audio pre-amplifier with automatic gain control of the circuit. Lines A and B are connection points between FIG. 2 and FIG. 3.

Referring to FIG. 3, sensitivity resistor 49 can be decreased in value to increase the sensitivity of the circuit. The emitter of transistor 50 joins to a positive 12 volts D.C., with its collector connects to resistor 51. The other side of resistor 51 is connected between resistor 49 and the base of transistor 56 at connection point 52, which is maintained at a variable voltage depending upon the amplifier output. Resistor 53 connects between resistor 51 and ground. Resistor 54 is connected between 12 volts D.C. and base of transistor 50, and resistor 55 is connected between base of transistor 50 and collector of transistor 56. The upper trip point of transistor 50 is 7.2 volts D.C., and the lower trip point is 5.2 volts D.C., the emitter of transistor 56 joins line B, the cathode of diodes 59 and 60, and the positive side of capacitor 61. The other sides of diode 60 and capacitor 61 are grounded. The anode of diode 59 connects to resistor 58 which is in series with 12 volts D.C. Point 63, which is between resistor 58 and anode of diode 59 is maintained at 6.8 volts D.C. regulated. The collector of transistor 56 joins capacitor 69, with the anode side of said capacitor being between resistor 98 and the cathode side of diode 70. The other side of resistor 98 connects to ground. The anode side of diode 70 joins the base of transistor 72, and resistor 67, and the other side of resistor 67 connected to circuit point 63, which is maintained at 6.8 volts D.C. regulated. The emitter of transistor 72 returns to ground. Circuit point 62 joins resistor 64, with said resistor being in series with the collector of transistor 66. The emitter of transistor 66 goes to ground, and the collector joins the anode of capacitor 65, with the cathode of said capacitor connecting to base of transistor 72. Resistor 68 is between the base of the transistor 66 and the collector of transistor 72, and resistor 71 is located between circuit point 62 and the collector of transistor 72. Resistor 73 connects between the collector of transistor 72 and the circuit point D. The positive side of capacitor 74 joins between the resistor 73 and point D, and the negative side of said capacitor is grounded. Circuit lines C and D of FIGS. 3 and 4 are connection points. The segment of the circuitry delineated by 75 represents an amplitude detector, segment 76 presents a shunt zener voltage regulator, segment 77 represents a temperature compensated monostable multivibrator, and portion 78 represents the integrator.

Referring to FIG. 4, meter 79 indicates a zero center differential voltmeter (preferably from plus 0.5 to negative 0.5 volts D.C.), which joins with switch 80 in series with the resistor 81, which connects to positive 12 volts D.C. Circuit line C represents positive 6.2 volts D.C. regulated.

Potentiometer 82 is in series with resistor 83, which is series connected with resistor 85, which is also in series with resistor 87. This resistor likewise is in series with resistor 89, as are also the remaining resistors 91, 93, 95, and 96. The other side of resistor 96 is grounded. Resistor 97 has one side connected between resistor 95 and resistor 96, and the other side coupled to circuit line C. Points 94, 92, 90, 88, 86, and 84 are connection points which connect to switch 19 of FIG. 1 and then to meter 79. The switch output is an exact D.C. voltage.

Also, by way of illustration, the following parts list describes a series of components that may cooperate to provide operation of the preferred embodiment. Observing other variations, and the values of said components, can be changed to vary the operating characteristics of the circuitry.

Integrated circuit 30 — 741 operational amplifier
Transistor 36 — 2N3643
Transistor 56 — 2N3643
Transistor 66 — 2N3643
Transistor 72 — 2N3643
Transistor 50 — 2N3638
Diode 42 — 1N270
Diode 60 — 1N753A
Diode 59 — 1N4148
Diode 70 — 1N4148
Diode 19 — 1N4148
Capacitor 23 (disc) 0.05 uF
Capacitor 27 (disc) 0.01 uF
Capacitor 69 (disc) 0.001 uF
Capacitor 41 (S.T.) 1.0 uF
Capacitor 65 (MMF) 0.22 uF
Capacitor 45 (S.T.) 2.2 uF
Capacitor 35 (S.T.) 4.7 uF
Capacitor 24 (S.T.) 22.0 uF
Capacitor 61 (S.T.) 22.0 uF
Capacitor 74 (S.T.) 22.0 uF
Resistors in ohms ± 5% ¼ Watt (Carbon)
Resistor 25 — 100.0 ohm
Resistor 26 — 10.0 K ohm
Resistor 28 — 150.0 K ohm
Resistor 29, 44 — 1.0 K ohm
Resistor 39 — 1.0 M ohm
Resistor 40 — 220.0 K ohm
Resistor 49 — 10.0 K ohm
Resistor 51 — 27.0 K ohm
Resistor 53 — 150.0 K ohm
Resistor 54, 55 — 5.6 K ohm
Resistor 58 — 220.0 ohm
Resistor 64 — 1.2 K ohm

Resistor **68** — 12.0 K ohm
Resistor **98** — 68.0 K ohm
Resistor **81** — 180.0 K ohm
Resistor **97** — 6.8 K ohm
Resistor **96** — 15.0 ohm
Potentiometer **82** — 500 ohm
Resistors in ohms ± 1% ¼ Watt (Metal film)
Resistor **67** — 16.2 K ohm
Resistor **83** — 332.0 ohm
Resistor **85** — 169.0 ohm
Resistor **87** — 102.0 ohm
Resistor **89** — 97.6 ohm
Resistor **91** — 73.2 ohm
Resistor **95** — 133.0 ohm
Resistor **93** — 54.9 ohm

The operation of this invention is best described in two parts, the quiescent of bias voltages which exist in the instrument in the absence of an applied signal and the small signal conditions which exist during a typical tuning operation.

The quiescant voltages are as follows:
Amplifier **30** is a D.C. coupled operational amplifier, being essentially a voltage actuated device, in that the input currents to the inverting and non-inverting inputs are essentially zero. Because operational amplifiers require symmetrical positive and negative power supply voltages with respect to the D.C. voltage present at the inputs and outputs, and this invention operates from a single supply voltage, we have established a reference voltage of positive 6.2 volts D.C. (approximately ½ the supply voltage) designated Line B. The establishment of this line as a signal reference permits the realization of symmetrical supply voltage necessary for proper operation of amplifier **30.**

Line **37** is maintained at essentially the same D.C. voltage as point **34** (+6.2VDC) by the amplifier **30** output. This occurs because line **37** constitutes the negative feedback path of amplifier **30,** whose output tends to drive the differential input voltage (difference voltage between amplifier inputs) to a null. Since amplifier **30** is a voltage actuated device, no D.C. current flows through feedback resistor **28,** thus line **43** is also maintained at essentially +6.2 volts D.C. under quiescant conditions.

The output of amplifier **30** is D.C. coupled to the Automatic Gain Control input diode **42,** and the Amplitude Detector input resistor **49.** Since the Automatic Gain Control (AGC) circuitry consisting of resistors **39** and **40,** capacitors **35** and **41,** diode **42** and transistor **36** is referenced to line B, diode **42** and transistor **36** do not conduct during quiescant conditions.

Similarly, since the Amplitude Detector consisting of resistors **49,51,53,54,55** and transistors **50** and **56** has its input transistor **56** referenced to line B, neither transistors **50** or **56** conduct during quiescent conditions.

The small signal conditions are as follows:
The output of the musical instrument (essentially a decaying sinusoid) is connected to input **10,** A.C. coupled by way of capacitor **23,** attenuated by resistors **26** and **29,** thus superimposing an A.C. signal on the quiescant D.C. voltage present at non-inverting input **34** thus causing this input to vary slightly above and below its quiescent D.C. voltage. This input produces an amplified in-phase output at **38,** again superimposed on the quiescent D.C. voltage whose amplitude will increase until a negative feedback signal at line **37** (inverting input **33**) is obtained that essentially equals the instantaneous voltage (D.C. ± A.C. component) present at input **34.** Thus amplifier **30** output, point **38,** varies above and below its quiescent D.C. voltage (+6.2 volts D.C.). In the event the input signal is sufficiently large to cause output **38** to exceed approximately 3 volts peak-to-peak, diode **42** conducts when output **38** goes positive with respect to line B (half wave rectifying the output), charging filter capacitor **41** to a peak voltage of approximately one volt, which is sufficient to provide base drive to transistor **36,** turning it on. The lowered output impedance of transistor **36** in series with capacitor **35,** shunts resistor **29,** thereby reducing the impedance between point **34** and line B, thus attenuating the A.C. signal present at **34** and maintaining a relatively constant 3 volt peak-to-peak output at **38.**

Transistor **56** conducts during the positive alternation present on line **43,** when the instantaneous voltage with respect to line B exceeds approximately 1 volt, thus forward biasing this transistor emitter-to-base junction. A portion of transistor **56**'s collector current is used to turn on transistor **50** whose collector current increases the initial base current of transistor **56,** thus providing positive feedback and rapid turn-on of **56.** This rapid turn-on of transistor **56** essentially squaring up the input, thus providing a sharp negative transition present at its' collector, which is differentiated by capacitor **69** to provide a negative trigger pulse at the cathode of diode **70.** Transistor **56** is turned off during the negative alternation on line **43.**

The Shunt Zener Voltage Regulator (**76**) has no effect on the small signal operation of the instrument (see quiescent voltage description).

The Temperature Compensated Monostable Multivibrator (**79**) is arranged such that transistor **72** is normally conducting while transistor **66** is normally turned off. Upon receipt of a negative trigger pulse at the cathode of diode **70,** transistor **72** is turned off and transistor **66** is turned on for a time determined by the RC time constant of capacitor **65** and resistor **69.**

Integrator **78** is used to filter the positive pulses present at the collector of transistor **72** for comparison with the Precision D.C. Attenuator Outputs.

The operation of this invention, whose components have been reviewed, will be described, by way of example, or to how a guitar can be tuned. This invention first changes the frequency from the musical instrument into a voltage, and then compares this proportional voltage to a reference voltage. The electrical output of the guitar is connected to the conventional phase jack **10,** with said jack connected to the input of the pre-amplifier **11.** The invention is turned on by way of a switch, and the power supply energizes the pre-amplifier **11,** the frequency to voltage converter **13,** and the attenuator **17,** with positive and negative **12** volts generated direct current. The zero center meter **15,** will indicate full deflection to one side, depending on how the meters terminals are connected between the attenuator and the converter. One position of a six position switch **18,** is selected, with this position connected between an attenuators precision resistor, and the meter. One guitar string is then strummed, (the one strummed is dependent on the switch position selected), and its signal is then amplified by the pre-amplifier. The amplified signal from said pre-amplifier is then changed into a voltage in the frequency to voltage converter. This voltage is proportionally equal to the frequency of the string of the musical instrument,

and is connected to one side of the zero center meter. The individual then turns the tuning cog on the guitar until the zero center meter's needle reads zero, or in tune. If the guitar string is flat, said needle will dip respectively left, and if sharp, it will move to the right.

The voltage from a resistor of the attenuator, being connected to the meter, by way of the six position switch, is calculated through the selection of the value of said resistor to be equal to the voltage output of the frequency to voltage converter, when the string is in tune. Each string being individually tuned, is strummed, and the switch position is selected dependent on the chosen string. Each position of said switch furnishes a reference potential compared to each guitar string.

For a guitar, six resistors are needed in the attenuator to make constant reference voltages that are compared with the six potentials from the converter, representative of the frequencies of the six guitar strings. For musical instruments with more strings or notes, more resistors are needed in the attenuator, and more switches to furnish these potentials to the meter. For example, in tuning a piano, approximately 88 resistor-switch combinations may be used to initiate tuning after the tone is picked up by a microphone.

Other switches may also be needed to change the operating characteristics of said tuner for multiple frequency instruments.

Also, there may be another position on said six position switch, or a separate switch, that when engaged, indicates a reading on the meter. This would be the battery check switch, where the power supply is from a D.C. battery, and if the meter reads within a certain area, the battery is of sufficient potential to operate the tuner. If this reading is to low, or outside of the indicated area, the battery supply should be changed. Such a check switch would not be required where the supply power is a common rectified line current.

The above description is of the preferred embodiment and is generally illustrative of the invention. Other variations within the principle of the invention may occur to those skilled in the art in light of this disclosure.

I claim:

1. An electronic tuning device for tuning musical instruments comprising a pre-amplifier, a frequency to voltage converter, a D.C. attenuator, a differential voltmeter, and a power supply, said power supply connecting to and charging said pre-amplifier and converter, with said pre-amplifier amplifying the input signal from the musical instrument, said amplifier connected to said (a) frequency to voltage converter in which the frequencies are changed to voltages proportionally, said differential voltmeter being connected between the D.C. attenuator and the frequency to voltage converter as a null indicator to indicate voltage difference.

2. An electronic tuning device for tuning musical instruments or the like, comprising a (an) amplifier for receiving and amplifying an electrical signal representative of a musical note from the instrument, a converter electrically connected to said amplifier and provided for changing the amplified signal into a corresponding representative voltage, a differential voltmeter designed for receiving said voltage from the converter, and attenuator being preset to emit one or more potentials representative of electrically tuned musical notes, said voltmeter provided for comparing the converter voltage with the attenuator reference potential to determine their difference, and a power supply furnishing (to furnish) electrical energy to said amplifier and converter (circuit components).

3. The invention of claim **2** wherein said pre-amplifier is a transistorized audio amplifier.

4. The invention of claim **2** wherein said pre-amplifier is an integrated circuit audio pre-amplifier.

5. The invention of claim **2** wherein said pre-amplifier has at least one filter to filter out harmonics from the notes and frequencies of the musical instrument.

6. The invention of claim **2** wherein said pre-amplifier has feedback components to vary the gain of said amplifier.

7. The invention of claim **5** wherein said filter is a low pass filter.

8. The invention of claim **2** wherein said pre-amplifier has an automatic gain control circuit.

9. The invention of claim **2** wherein said attenuator is a device whose outputs are exact voltages.

10. The invention of claim **2** wherein said voltmeter is a zero center meter that measures voltage differences.

11. The invention of claim **10** wherein said voltmeter is calibrated or marked to indicate if the instrument being tuned is flat, on tune, or sharp and its respective magnitude.

12. The invention of claim **10** wherein said voltmeter is a device for indicating a voltage difference.

13. The invention of claim **12** wherein said voltage difference is proportionally equal to the difference between the frequency of the note generated from the musical instrument and the frequency that note should be.

14. The invention of claim **2** wherein said frequency to voltage converter is a transistor frequency to voltage converter that proportionally changes frequency to voltage.

15. The invention of claim **2** wherein said frequency to voltage converter has an input resistor as a sensitivity control.

16. The invention of claim **2** wherein said power supply comprises a direct current battery.

17. The invention of claim **2** wherein said power supply uses a diode between said supply and tuning device circuits as a reverse polarity protection device to insure the safety of the circuit components if power supply is reversed.

18. The invention of claim **2** wherein said power supply furnishes direct current to said components.

19. The invention of claim **18** wherein said direct current comprises a rectified alternating current supply.

20. The invention of claim **9** wherein said voltages from the attenuator go through a switch that selects the correct potential to be compared by the voltmeter.

21. The invention of claim **20** wherein said switch has an extra position for a battery check to ensure that the power supply is at sufficient potential.

* * * * *