Feb. 24, 1931. H. H. FICK 1,793,788

AEROPLANE

Filed Nov. 21, 1927 2 Sheets-Sheet 1

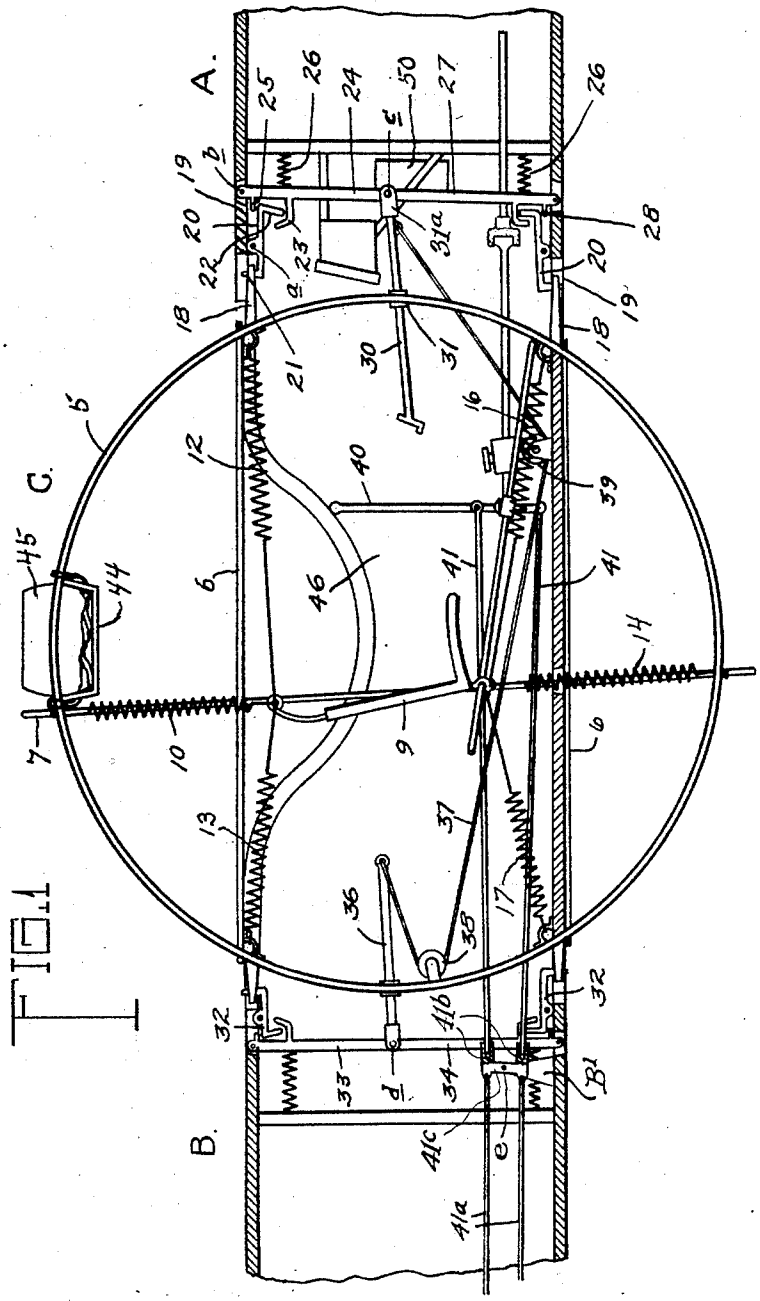

FIG. 1

INVENTOR.
Hannibal H. Fick.
BY Walter N. Haskell.
his ATTORNEY.

Feb. 24, 1931. H. H. FICK 1,793,788

AEROPLANE

Filed Nov. 21, 1927 2 Sheets-Sheet 2

FIG. 2

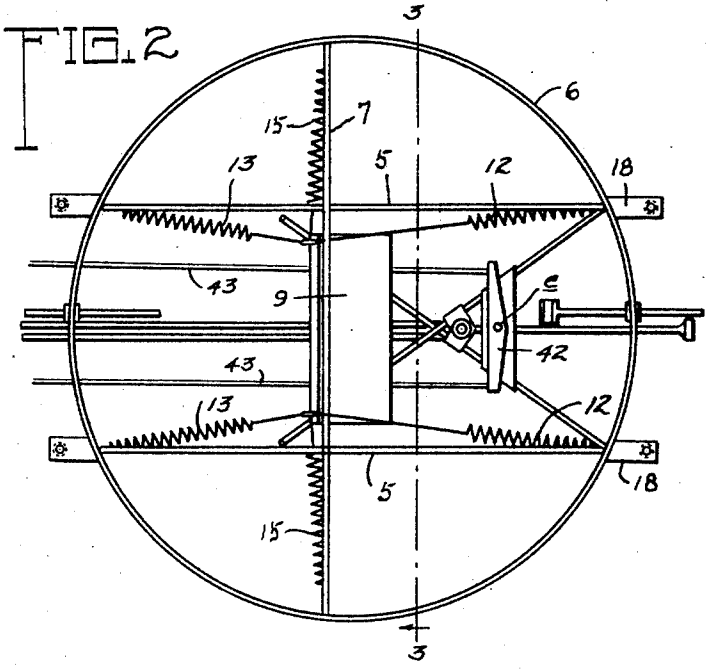

FIG. 3

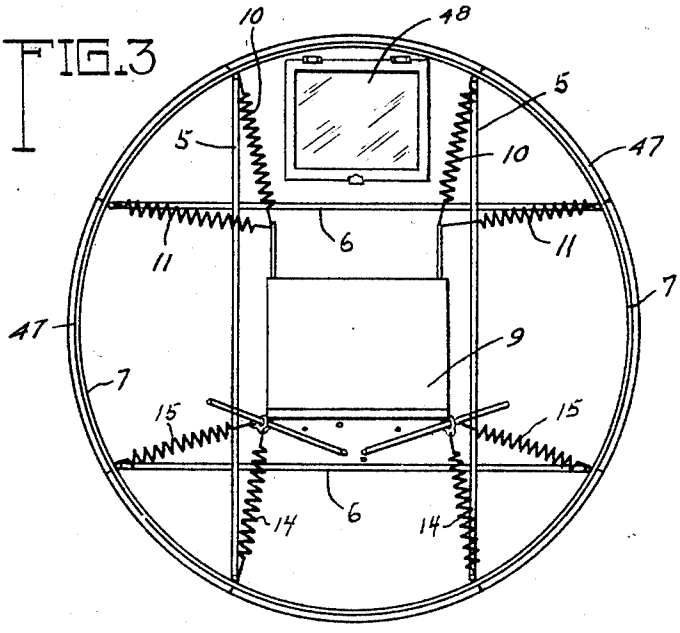

INVENTOR.
Hannibal H. Fick,
BY
Walter N. Haskell.
his ATTORNEY.

Patented Feb. 24, 1931 1,793,788

UNITED STATES PATENT OFFICE

HANNIBAL H. FICK, OF McCAUSLAND, IOWA

AEROPLANE

Application filed November 21, 1927. Serial No. 234,884.

My invention has reference to aeroplanes, the chief purpose of the same being to provide a safety apparatus, forming a separate section of the machine, which can be instantly disconnected from the rest of the air-ship, in case of trouble, said detached section and its occupant floating to the earth by means of a parachute support.

Another purpose of the invention is to form the releasable section, or cage, of resilient frames, and of a spherical shape, so that upon coming in contact with the ground with any amount of force it will bound and roll along the ground without any great amount of shock to the occupant.

Another purpose of the invention is to have the releasable section entirely fire-proof, so that no flames or excessive heat can reach the interior thereof from other parts of the machine. This is accomplished by having all of the parts of the safety device formed of metal, and encasing the same in aluminum or other material of light weight, which will act as a heat insulation.

Another object thereof is to support the seat of the occupant of the release section by a spring suspension, so that the seat will yield readily to shocks coming from any direction.

The device is shown herein in use with a frame of relatively light build, but changes and adaptations thereof can be made to enable it to be used with various forms and sizes of air-ships. For instance, several of the releasable sections could be built in to a large machine of the passenger type, so as to be independently releasable, in case of danger. In this type especially the section would be provided with a form of armor plate, and sufficiently water-tight to enable the same to float on water, in case of falling into the same.

While designed specially as a means of escape from the ship in case of engine trouble or similar exigency, it is also useful as a means of escape in case the air ship encounters a severe storm.

The above-named, and other features and advantages of the invention will more fully appear from the following specification, reference being had to the accompanying drawings, in which;

Fig. 1 is a side elevation of the invention, with parts of the air-ship frame broken away at the ends, and the near side of the cock-pit removed.

Fig. 2 is a plan view thereof.

Fig. 3 is a cross-section on the broken line 3—3 of Fig. 2.

As shown in Fig. 1, A indicates a fragmentary part of the forward or motor frame of an aeroplane, B the rear or tail frame, and C the central, or cage section, which is capable of being instantly detached from the foregoing frame parts. It is formed of hoops or bands of spring steel, two of said hoops 5 being disposed in parallel vertical planes, two hoops 6 in horizontal spaced planes, and connected with the first-named hoops at the points of intersection, and a vertical hoop 7, passing at a right angle with the planes of the hoops 6, and also connected therewith at the points of intersection. In the center of the frame formed by said hoops is a seat 9 for the occupant, supported from above by a pair of tension springs 10, connected at their upper ends to the frames 6, and by similar springs 11 extending to the frame intersections at the sides. Additional pairs of coiled springs 12 and 13 connect the upper part of the seat with the front and back of the frame, respectively.

The lower part of said seat is connected by springs 14 with the lower part of the hoop frame, or cage, and by lateral springs 15 with the sides thereof. Additional springs 16 extend forwardly to the frame in front, while other springs 17 connect the lower part of the seat with the frame in the rear. This provides a spring suspension for the seat, holding it yieldingly in the center of the cage section, and protecting the occupant thereof from shocks of considerable severity.

Projected from the front of the section C are extensions 18, overlapping end pieces 19 on the frame A, and pivoted to the pieces 19 are trips 20, as at *a*. At their rear ends said trips are provided with wedge-shaped catches 21 for engagement with openings of similar shape in the extensions 18. The

other end of the upper trip 20 is turned downwardly at 22 for engagement with a guide 23 on an arm 24 pivoted to the frame 19, as at *b*. Just above the angle of the trip 20 is a lug 25, which prevents upward movement of that end of the trip so long as the arm 24 is in the position shown in Fig. 1, in which position it is yieldably held by means of a coiled spring 26, interposed between said arm and a part of the frame A.

The trip devices are duplicated at the lower part of the frame, and the arm 24 has a pivotal connection at *c* with a similar arm 27, pivoted at its lower end on the frame A. The lower end of the arm 27 is provided with a lug 28 and other parts for engagement with the end of the trip 20, the same as those shown above, and for a similar purpose. Said arm is also held normally in rearward position by a coiled spring 26. The pivot *c* is formed of a rod, connecting similar arms 24 and 27 at opposite sides of the machine, and connected with said rod at a central point is a push-rod 30, held slidably in a cross-piece 31 connecting the hoop frames 6, and provided with a pedal convenient to the foot of the operator of the airship. The forward end of the rod 30 is held loosely in a socket 31^a on the pivot *c*, so that said parts will readily disconnect on occasion. In case of trouble in the air the forward movement of the push-rod actuates the arms 24 and 27, releasing the trips 20, and disconnecting the part A from the part C of the machine.

Similar trip mechanisms are shown at 32 between the sections B and C, under the control of arms 33 and 34, having a pivot rod *d*, from which a push-rod 36 extends forwardly through a support in the frame of the part C. A cable 37 is attached to the end of the rod 36 and carried round pulleys 38 and 39 to a connection with the forward end of the push-rod 30. Upon the latter rod being actuated, the movement thereof is communicated to the rod 36 to move the same rearwardly, and operate the arms 33 and 34. As a result the tail section B is disconnected from the section C simultaneously with the separation of the part A therefrom, leaving the cage section free to descend by itself.

In front of the seat 9 is the usual operator's lever or stick 40, from which control rods 41 are carried rearwardly to connections with extensions 41^a, which latter rods are connected with the steering devices. Said rods and extensions are united by slip joints, permitting a quick release of such parts. A foot lever 42 is also fulcrumed in front of the seat, from the ends of which control rods 43 extend rearwardly. Any rods or connections which extend beyond the frame C are provided with connections for automatic release at the point where said frame connects with the other sections, so that there will be no parts which will tend to hold the sections from separation. This is shown in Fig. 1, wherein the rods 41 are connected with the rods 41^a by means of sockets 41^b on the ends of the last-named rods, and also united by a rock-arm 41^c, pivoted at *e* on a support B^1, mounted on the floor of the section B.

In the upper part of the section C is a rack 44, containing a parachute 45, the cords of which are connected with the section C, so as to permit a relatively slow descent upon being cut loose from the other sections of the machine. The parachute may be arranged to open automatically upon the section C starting its downward movement. Two or more parachutes may be used if necessary.

In Fig. 3 the cage is shown enclosed with sheet metal plates 47, in the upper part of which is a hinged window 48, which may also be used as a means for entrance to the interior of the cage and exit therefrom. By employing an armor plate enclosure the cage can be embodied in the heavier types of machines which are used as battle planes, said armor plate forming a protection for the occupant of the machine.

In Fig. 1 is shown one side 46 of a cock-pit enclosure of the seat, which would be used only with the lighter types of air-ships, and would be omitted when the cage is provided with the sheet metal enclosure.

While the invention is designed chiefly as a safety device for use when the air-ship is at a considerable height above the earth, the cage can also be cut loose when the machine is at a relatively short distance up, and the life of the occupant preserved by the shock absorbing features connected with such cage.

In Fig. 1 a battery box 50 is shown attached to the arm 27, the weight of such box and its contents being sufficient to automatically operate the arms 26 and 27, and release the cage C, in case the air-ship should run into an obstruction, such as the side of a hill or a structure of some kind, with sufficient force to severely jar and stun the occupant of the machine. After being freed the cage section would take its own course to the ground, with some chance of escape of the operator.

What I claim, and desire to secure by Letters Patent, is:

1. An aeroplane formed of a central spherical section and end sections detachably connected therewith, said central section being formed of a plurality of resilient hoops, enabling said section to roll and bound along the ground when separated from the other sections and said central section being releasable from the end sections while in flight.

2. An aeroplane formed of a central section and end sections detachably connected therewith, said central section being formed of a plurality of resilient circular frame members, and shock absorbing devices within said central section, said central section being re-

leasable from the end sections while the machine is in flight.

3. An aeroplane consisting of a central resilient spherical section, and pair of end sections detachably connected therewith, means for the instant release of said end sections, a seat centrally of the central section, a spring suspension for said seat yieldably acting in all directions, and a parachute apparatus for said central section.

In testimony whereof I affix my signature.

HANNIBAL H. FICK.