E. R. RAMSEY AND A. L. BLOMFIELD.

AUTOMATIC FEED CONTROL.

APPLICATION FILED APR. 5, 1919.

1,413,934.

Patented Apr. 25, 1922.

3 SHEETS—SHEET 1.

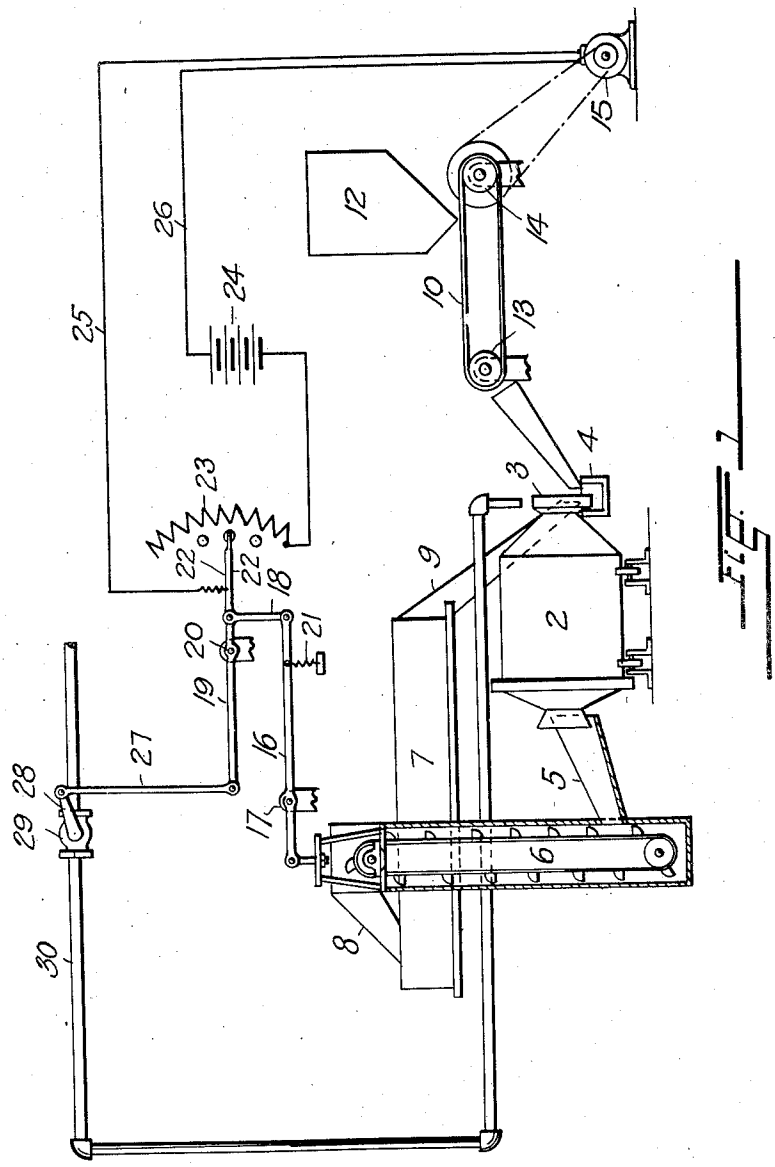

FIG. 1.

INVENTORS.
ELMER R. RAMSEY AND
A. L. BLOMFIELD.

BY

ATTORNEY.

E. R. RAMSEY AND A. L. BLOMFIELD.

AUTOMATIC FEED CONTROL.

APPLICATION FILED APR. 5, 1919.

1,413,934.

Patented Apr. 25, 1922.

3 SHEETS—SHEET 2.

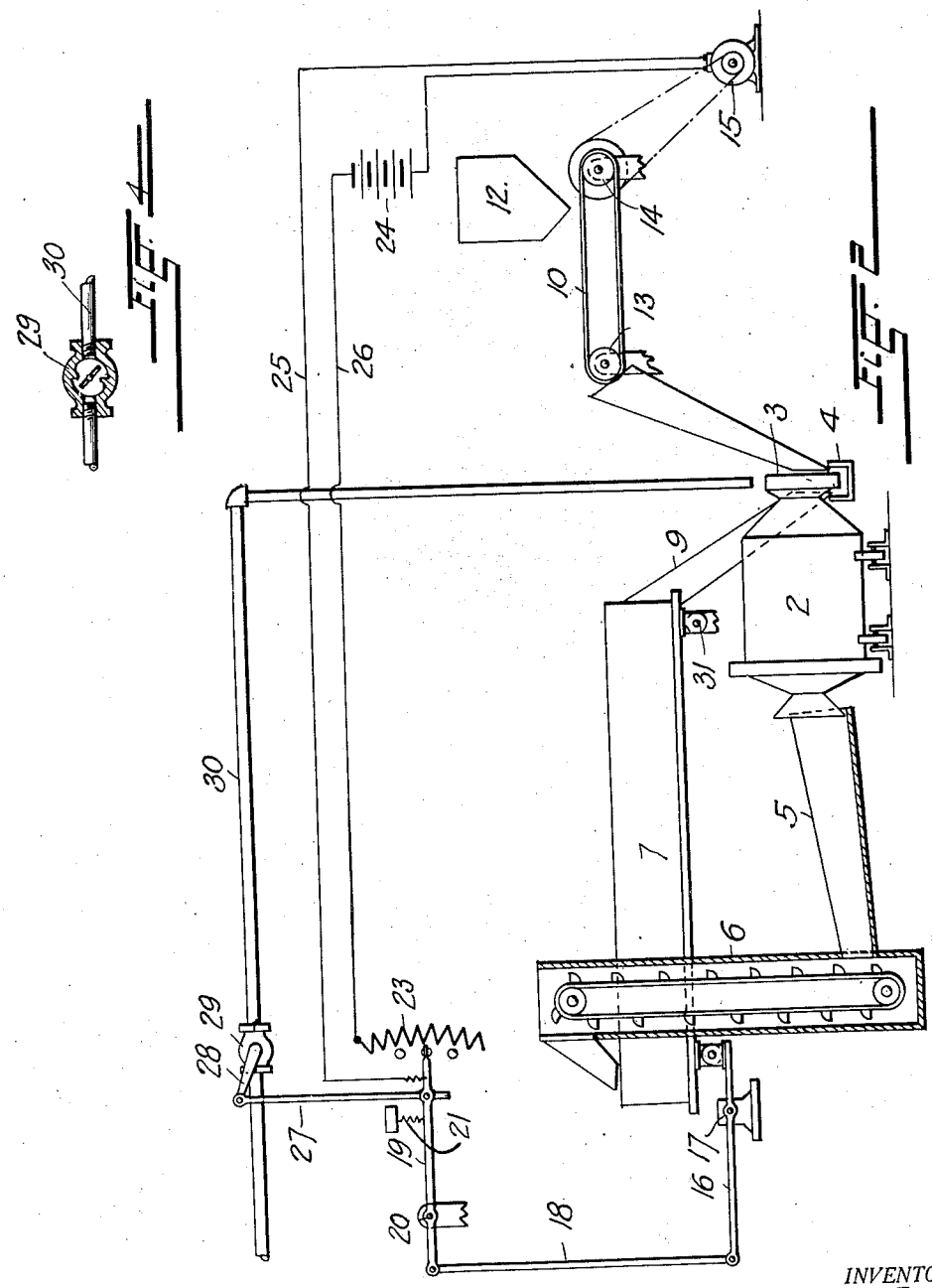

FIG. 4

FIG. 2

INVENTOR.
ELMER R. RAMSEY AND
A. L. BLOMFIELD.

BY

ATTORNEY.

E. R. RAMSEY AND A. L. BLOMFIELD.

AUTOMATIC FEED CONTROL.

APPLICATION FILED APR. 5, 1919.

1,413,934.

Patented Apr. 25, 1922.

3 SHEETS—SHEET 3.

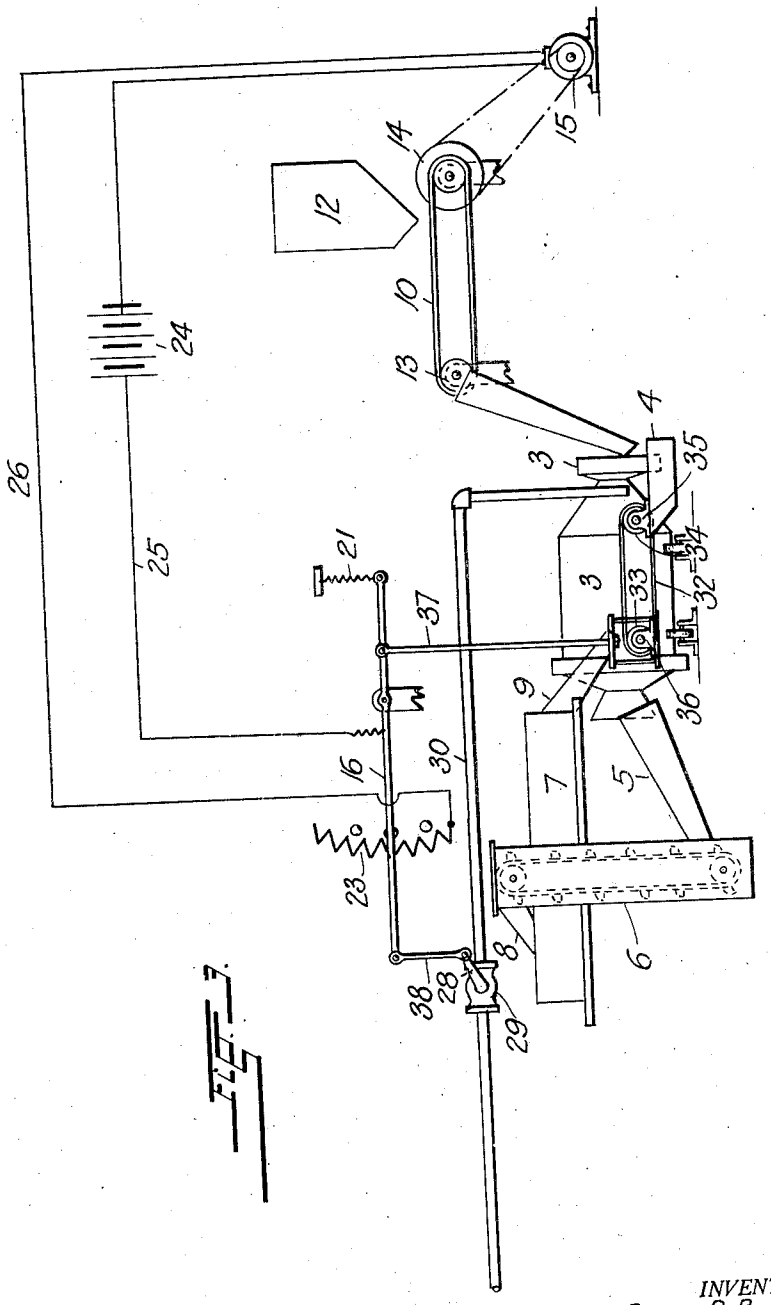

FIG. 7.

INVENTORS.
ELMER R. RAMSEY AND
A. L. BLOMFIELD.

BY

ATTORNEY.

UNITED STATES PATENT OFFICE.

ELMER R. RAMSEY, OF DENVER, AND ALFRED L. BLOMFIELD, OF COLORADO SPRINGS, COLORADO, ASSIGNORS TO THE DORR COMPANY, OF NEW YORK, N. Y., A CORPORATION OF DELAWARE.

AUTOMATIC FEED CONTROL.

1,413,934. Specification of Letters Patent. Patented Apr. 25, 1922.

Application filed April 5, 1919. Serial No. 287,905.

To all whom it may concern:

Be it known that we, ELMER R. RAMSEY and ALFRED L. BLOMFIELD, citizens of the United States, residing, respectively, at Denver, in the county of Denver and State of Colorado, and at Colorado Springs, in the county of El Paso and State of Colorado, have invented certain new and useful Improvements in Automatic Feed Controls, of which the following is a specification.

This invention relates to a method of automatically regulating the feed of granular material to apparatus in which it is treated, and its primary object is to provide a method of regulating the feed to an apparatus by and proportionate to variations in the weight of all or part of the load under treatment.

Another object of the invention is to utilize variations in the weight of all or part of the load for maintaining its density by the automatic regulation of a supply of water or other liquid.

Our invention is particularly applicable to grinding systems in which uniformity in the quantity and consistency of the load is essential to a constant maximum efficiency in operation.

Our improved method of feed control has been shown in the accompanying drawings as applied to a system in which a grinding mill is connected in circuit with a classifier which receives the product of the mill and returns the oversize thereto for further comminution.

The weight of the load, which regulates the feed, may be utilized before the material enters the classifier, while it is being classified, or before it is returned to the mill for further grinding. In the first two instances the weight of the entire circulating load controls the feed to the grinding mill and under the last-mentioned condition the weight of only the oversize discharged from the classifier is used for that purpose. It should be understood, however, that even though the weight of the entire circulating load is employed to actuate the means whereby the feed and the density of the material are regulated, it is principally by variations in the quantity of the coarser constituents of the load that the controlling function is performed.

A system of cooperative devices for producing the desired results under each of the above stated conditions has been illustrated in the drawings in which

Figure 1 represents the system as it is used for controlling the feed in a grinding system by the weight of the material before it enters the classifier;

Figure 2, the system as employed in controlling the feed by variations in the weight of the circulating load within the classifier, and,

Figure 3, the system as adapted for use in regulating the feed by variations in the weight of the oversize discharged from the classifier, before it reenters the mill;

Figure 4 is a sectional elevation of the valve which controls the supply of liquid to the material under treatment, in its normal condition.

We desire it understood that the system of cooperative devices shown in the drawings is merely illustrative as one of many methods for accomplishing the object of our invention and that the invention may be applied to apparatus other than that shown and in connection with a grinding mill operating either separately or in circuit with a classifier.

It should furthermore be understood that in using the terms "material" and "load" in the following description, reference is had to both dry solids and solids in liquid and that the means for automatically regulating a supply of a liquid to the circulating material may if so desired be employed without the means for regulating the feed of solids, to constantly maintain the circulating load at a determinate degree of density.

Referring first to Figure 1 of the drawings, the reference numeral 2 designates a ball grinding mill having at its intake end a scoop 3 which in the rotary movement of the mill dips intermittently into a feed-trough 4 and discharges its load into the inlet opening with which it is connected.

The ground product discharged through an opening at the opposite end of the mill is through the medium of a chute 5 delivered into a bucket-elevator 6 which carries it to an elevated point of discharge from where the material is conveyed to a classifier 7 of suitable construction by means of a chute 8.

The classifier operates to divide the fine solids in the product of the mill from the coarser matter or oversize which is separately discharged from the classifier and conducted by a chute 9 to the feed trough 4 to be returned to the mill for further grinding.

The fresh material is fed to the trough by an endless belt 10 which receives its load from a superposed supply bin 12. The belt is mounted upon rotating rollers 13 and 14 one of which is driven by connection with an electric motor 15.

The elevator 6 is suspended from the short arm of a lever 16, fulcrumed as at 17, the opposite long arm of which is by means of a link 18 connected with the short arm of a second lever 19 which has its fulcrum at a point 20.

A spring 21 fixed at its lower end and connected with the long arm of the first lever compensates for the weight of the elevator and its load under normal conditions, and by opposing the force of gravitation acting upon the short arm of the lever yieldingly maintains its equilibrium.

The arm 22 of the lever 19 constitutes the controlling member of a rheostat 23 by which a variable resistance is introduced into the circuit of the motor, which in the construction shown in the drawings includes a source of electricity 24 and positive and negative conductors 25 and 26. The opposite arm of the lever is through the medium of a link 27 connected with a crank 28 on the rotary plug of a valve 29 of the butterfly type which controls the flow of liquids through a conduit 30 which connects with a conveniently disposed source of supply and empties into the feed trough of the mill.

In the operation of the above-described system, the feed belt conveys the material discharged from the supply-bin 8 continuously to the feed trough of the grinding mill and the valve 29 is in a partially open position as shown in Figure 4 to continuously supply a certain quantity of water to the material under treatment. An increase in the amount of material discharged from the mill during a determined period of operation will cause the short arm of the lever 16 to move downwardly against the action of the spring 21 by the proportionately increased weight of the load of the elevator.

The consequently upwardly moving long arm of the lever acting upon the lever 19, causes the valve to further open and thereby increase the supply of water to the feed-trough of the mill, and at the same time increases the resistance in the rheostat to reduce the velocity of the motor and of the therewith connected feed-belt.

The increased supply of liquid to the feed-trough tends to immediately correct any differences in the operation of the mill and any retardation in the circulatory movement of the load by an overaccumulation of solid matter and by subsequently decreasing the feed of fresh material to the mill, the system is rapidly restored to its normal condition when by the decrease in weight of the load of the elevator, the levers and the therewith connected elements of the system are returned to their original position.

In case the quantity of material in the mill falls below its capacity, the proportionate decrease in weight of the load of the elevator causes the levers to move in the opposite direction with the result that by a decrease of resistance to the current flow in the rheostat, the movement of the feed-belt is accelerated until the normal amount of material passes through the mill, while, at the same time the water supplied to the mill is diminished by a closing movement of the valve.

It will thus be seen that by automatically controlling the feed and the water supply to the mill by variations in the weight of all or part of the circulating load, the mill and the classifier in circuit therewith are caused to constantly operate with a maximum efficiency, loss of energy is in consequence avoided, a uniform movement of material through the circuit is maintained and wear on the grinding elements of the mill improportionate to the amount of energy expended, is eliminated.

In the construction shown in Figure 2, the before-stated results are obtained by weighing the circulating load while it is contained in the classifier for the separation of its fines from the coarse material or oversize.

The classifier is pivotally supported at one of its ends, as at 31, and its opposite end rests upon the short arm of the lever 16 which by means of the link 18 is connected with the short arm of the second lever 19 whose long arm is by the link 27 connected with the crank-arm 28 of the rotating plug of the valve 29 and serves as the controlling medium of the rheostat 23.

An increase or decrease in the weight of the material in the classifier causes it to move about its fulcrum and thereby actuates the levers which control the supply of liquid through the conduit 30 and the supply of fresh material by the movement of the feed belt as in the first described form of the invention.

In Figure 3 of the drawings, the feed and water supply are controlled by variation in the weight of the coarse product

of the classifier discharged during a determinate period of operation before it reenters the grinding mill.

The oversize discharged from the classifier is by the chute 9 delivered onto an endless belt 32 which carries it to the feed trough of the mill.

The belt is mounted on rollers 33 and 34 one of which is supported in stationary bearings 35 and the other one of which is mounted in boxes 36 which are suspended from the short arm of the lever 16 by a link 37.

The spring 21 acts upon the same arm of the lever to compensate for the weight of the belt and its normal load as in the first described form of the invention.

The long arm of the lever is by a link 38 connected with the crank arm of the valve and also carries a contact which constitutes the controlling medium of the rheostat.

The operation of the system by a decrease or increase in the weight of the oversize of the classifier discharged onto the belt 32 is identical to that of the forms of our invention in which the discharge of the mill and the contents of the classifier are the actuating mediums and no further description thereof is though to be necessary at this point.

What we claim and desire to secure by Letters-Patent is:

1. In combination, a grinding mill, a feed supply and a water supply discharging into the mill, a receptacle and a weighing device for the products of said mill, and means controlled by the movement of the weighing device for regulating the quantity of material and water supplied to the mill by said feed and water supplies respectively.

2. In combination, a grinding mill, a feed supply and a water supply discharging into the mill, a weighing device, and means controlled by the movement of the weighing device for regulating the quantity of water and material to the mill.

3. In combination, a grinding mill, a feed supply for the mill, a receptacle and a weighing device for the products of said mill and means controlled by the movement of the weighing mechanism for regulating the quantity of material fed to the mill.

4. In combination, a grinding mill, a feed supply for said mill, a valve controlled liquid supply, a receptacle and a weighing device for the products of said mill, and means controlled by the movement of the weighing device for regulating the quantity of material fed to the mill and for adjusting the valve to regulate simultaneously the liquid supply.

5. In combination, a grinding mill, a feed supply for said mill, a valve controlled liquid supply, a receptacle and a weighing device for the products of said mill, and means controlled by the movement of the weighing device for adjusting the valve of the liquid supply to regulate the latter.

6. In combination, a grinding mill, mechanism for feeding material to the mill, a receptacle and a weighing device for the products of the mill, and means controlled by the movement of the weighing device for regulating the feeding mechanism.

7. In combination, a grinding mill, mechanism for feeding material thereto, a valve controlled liquid supply, a receptacle and a weighing device for the products of the mill, and means controlled by the movement of the weighing device for operating the valve to regulate the liquid supply.

8. In combination, a grinding mill, mechanism for feeding material to the mill, means for actuating the said mechanism including a closed electrical circuit, a device arranged in said circuit for varying the strength of the current and the consequent feeding of the material to the mill, a weighing device for the products of the mill, a liquid supply, and means actuated by the movement of the weighing device for controlling the liquid supply and having one of its members operating the current controlling device.

9. In combination, a grinding mill, mechanism for feeding material to the mill, means for actuating the said mechanism including a closed electrical circuit, a device arranged in said circuit for varying the strength of the current and the consequent feeding of material to the mill, a weighing device for the products of the mill, a liquid supply, and means actuated by the movement of the weighing device for controlling the liquid supply and having one of its elements operating the current controlling device.

10. In combination, a grinding mill, mechanism for feeding material to the mill, means for actuating the said mechanism including a closed electrical circuit, a device arranged in said circuit for varying the strength of the current and the consequent feeding of material to the mill, a weighing device for the products of the mill, a valved control liquid supply and means actuated by the movement of the weighing device and connected with the valve of the liquid supply to regulate the same and having one of its members operating the current controlling device.

11. In combination, a grinding mill, a feed supply and a liquid supply for said mill, a weighing device for the products of the mill, a conveyor connected with the weighing device and arranged to receive the products of the mill, and means controlled by the movement of said weighing device for regulating the quantity of material and liquid supplied to the mill by said feed and liquid supplies respectively.

12. In combination, a grinding mill, a feed

supply and a liquid supply for said mill, a receptacle and a weighing device for the products of said mill, an elevator suspended from the weighing device and arranged to receive the products of the mill, and means controlled by the movement of the weighing device for regulating the quantity of material and liquid supplied to the mill by the said feed and liquid supplies respectively.

13. In combination, a grinding mill, a valve controlled liquid supply, a feed supply having a motor, a weighing device for the products of said mill, a closed circuit having the said motor arranged therein, a rheostat arranged in the said circuit, a liquid supply and means actuated by the weighing device and connected with the liquid supply and the rheostat for controlling the same.

In testimony whereof we have affixed our signatures.

ELMER R. RAMSEY.
ALFRED L. BLOMFIELD.