United States Patent [19]

MacIsaac, Jr. et al.

[11] **3,722,442**

[45] **Mar. 27, 1973**

[54] **TUFTED PILE FABRICS AND METHOD OF MAKING SAME**

[75] Inventors: **John T. MacIsaac, Jr.; James E. Troy,** both of Eden, N.C.

[73] Assignee: **Fieldcrest Mills, Inc.,** Eden, N.C.

[22] Filed: **Jan. 29, 1971**

[21] Appl. No.: **110,967**

[52] **U.S. Cl.**.....**112/410,** 66/85 A, 112/266

[51] **Int. Cl.**.....**D05c 17/02**

[58] **Field of Search**.....112/79 R, 79 A, 266, 410; 66/85 A; 139/391, 399

[56] **References Cited**

UNITED STATES PATENTS

3,075,481	1/1963	Stratton	112/79 R
1,827,614	10/1931	Riviere	112/266 X
3,013,511	12/1961	Nebich	112/79 R
3,026,830	3/1962	Bryant et al.	112/79 R
3,253,426	5/1966	Mauersberger	112/79 R
3,336,178	8/1967	Levitch	112/410 X
3,361,096	1/1968	Watkins	112/79 R
3,421,929	1/1969	Watkins	112/79 R
3,428,007	2/1969	Wignall et al.	112/79 R

FOREIGN PATENTS OR APPLICATIONS

813,439	5/1959	Great Britain	112/79 R

Primary Examiner—James R. Boler

Attorney—Parrott, Bell, Seltzer, Park & Gibson

[57] **ABSTRACT**

A tufted pile fabric and method of making the same in which rows of pile tufts are formed extending upwardly from the upper face of a backing fabric or base and have lower bights at least partially positioned above the plane of the lower face of the backing fabric to permit use of less pile yarn for obtaining any given height of pile. Also, a plurality of stitching threads are positioned along the lower face of the backing fabric and portions of the stitching threads are inserted through the lower bights of the tufts to secure them to the backing fabric.

29 Claims, 11 Drawing Figures

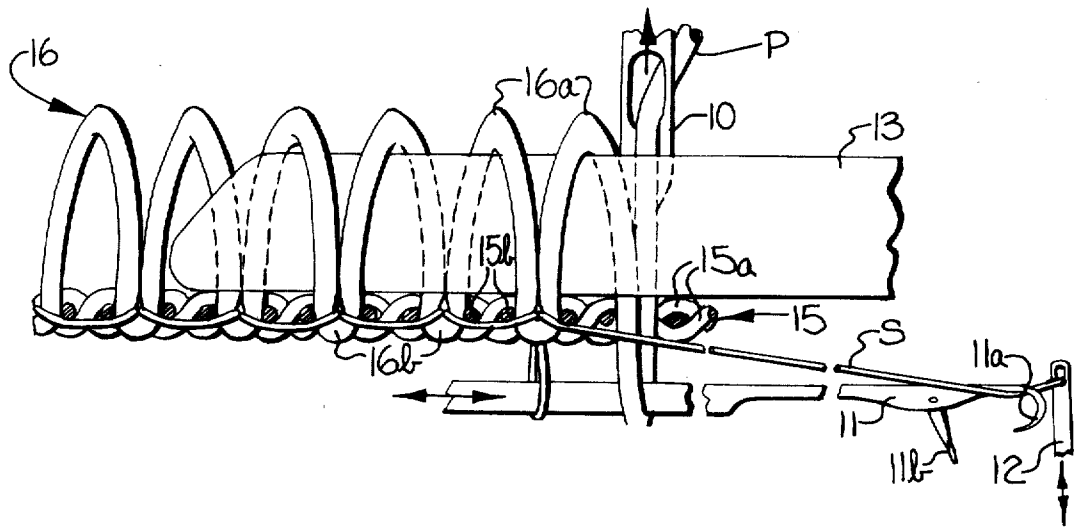

PATENTED MAR 27 1973

3,722,442

SHEET 1 OF 3

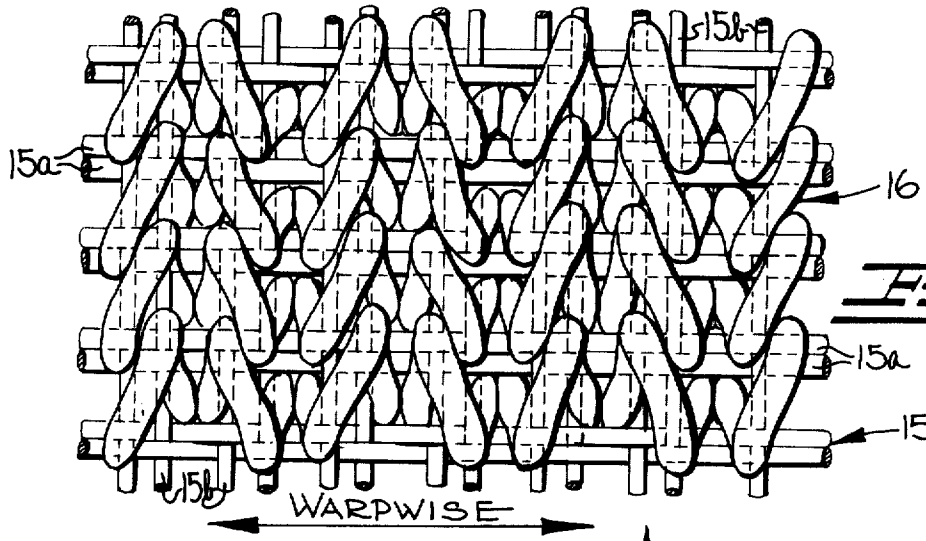

Fig-1

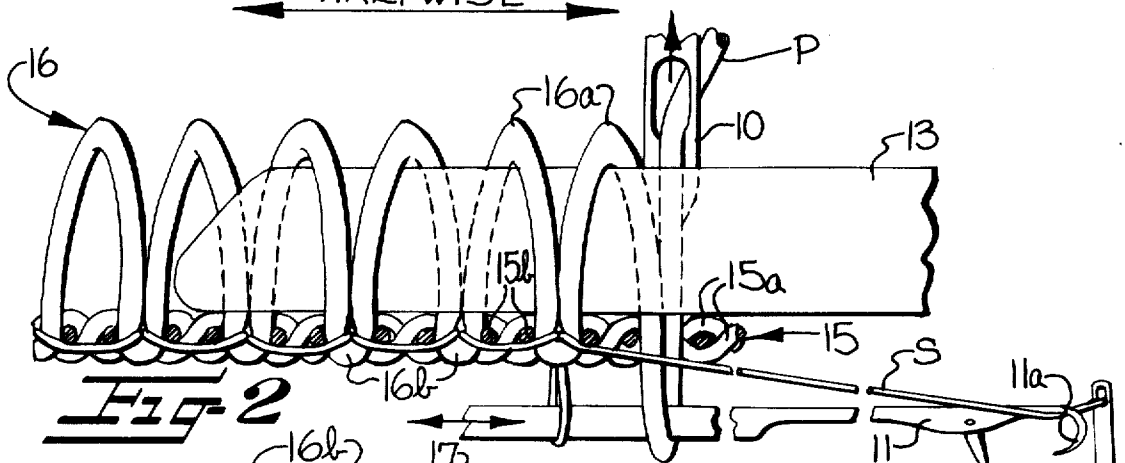

Fig-2

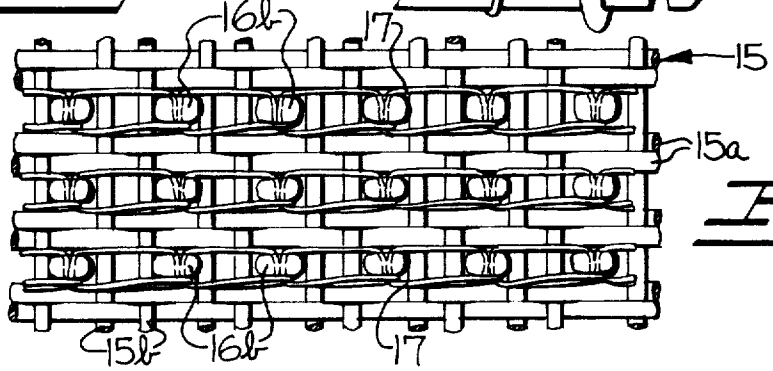

Fig-3

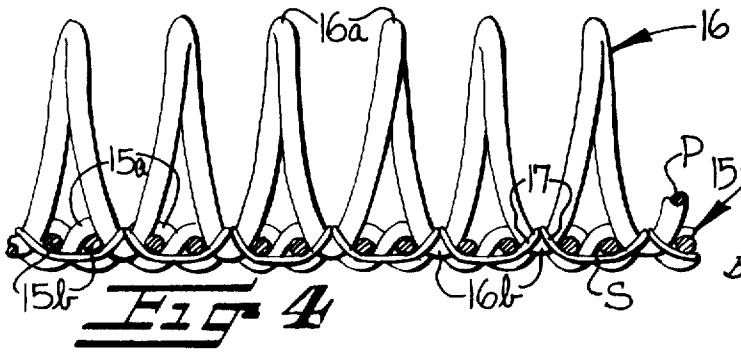

Fig-4

INVENTORS:
JOHN T. MACISAAC, JR.
and JAMES E. TROY
BY Parrott, Bell, Seltzer, Park & Gibson
ATTORNEYS

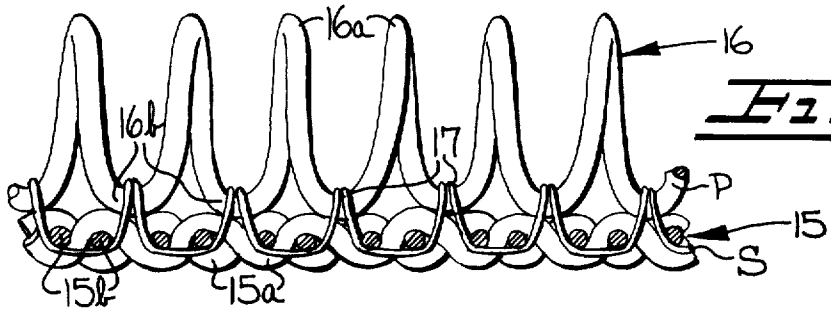

Fig-5

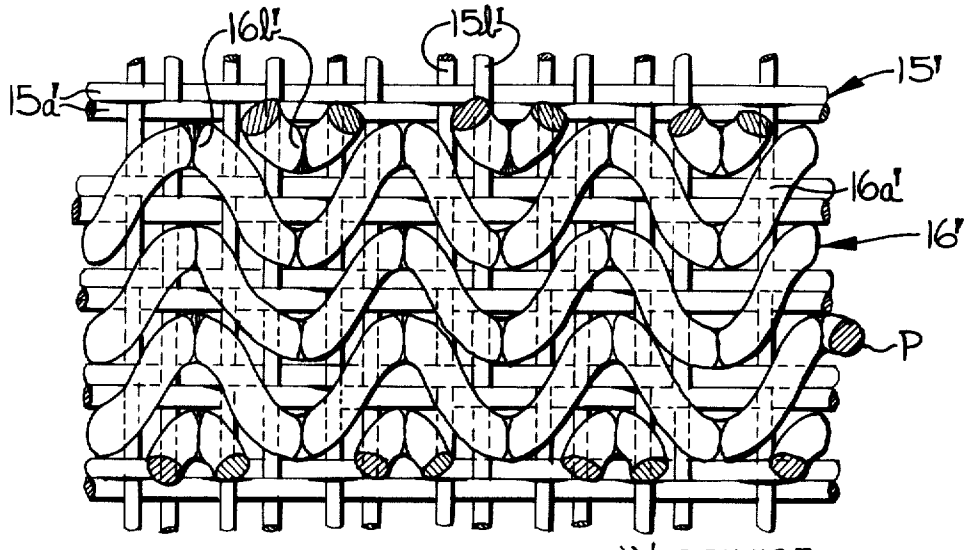

Fig-6

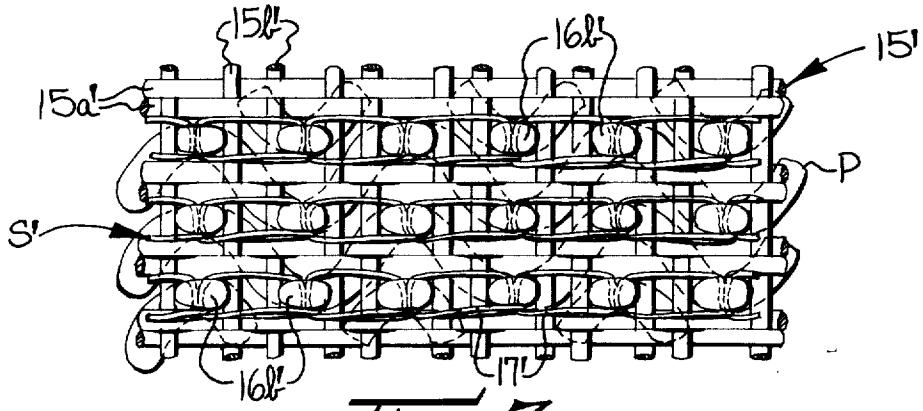

Fig-7

INVENTORS
JOHN T. MACISAAC, JR.
and JAMES E. TROY

BY Parrott, Bell, Seltzer, Park & Gibson
ATTORNEYS

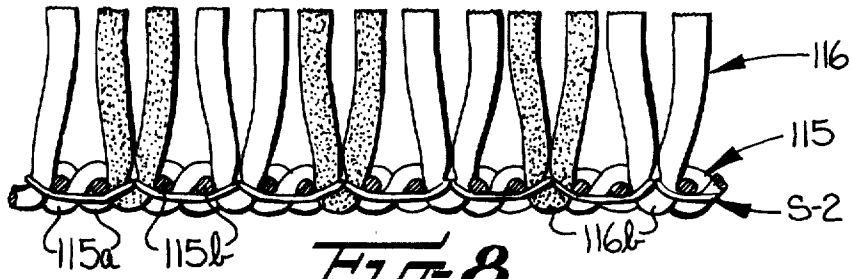

Fig-8

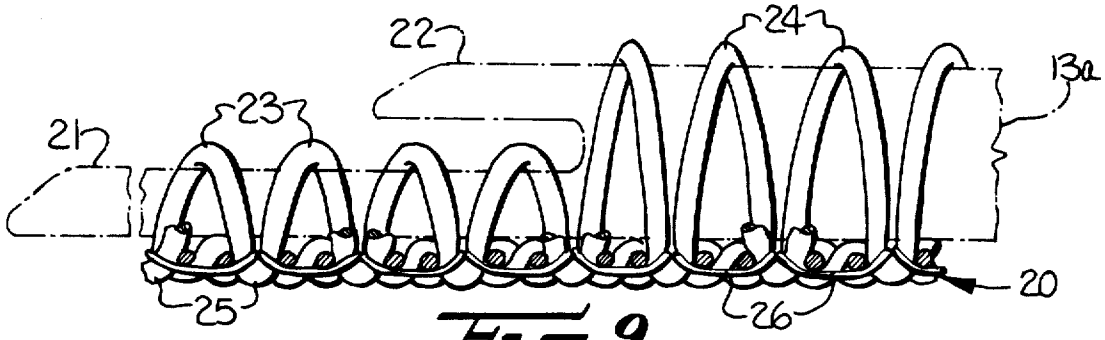

Fig-9

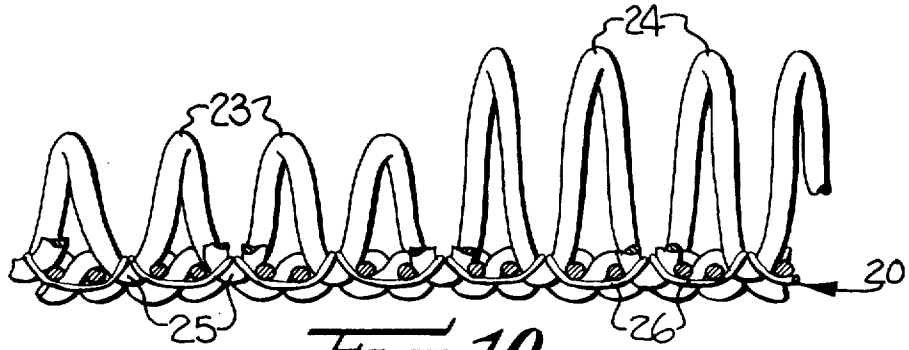

Fig-10

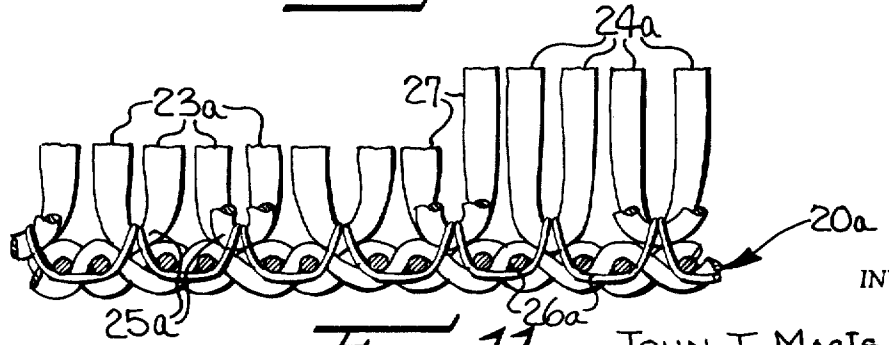

Fig-11

INVENTORS:
JOHN T. MACISAAC, JR.
and JAMES E. TROY
BY Parrott, Bell, Seltzer, Park & Gibson
ATTORNEYS

TUFTED PILE FABRICS AND METHOD OF MAKING SAME

This invention relates to improvements in tufted pile fabrics of the type wherein the lower bights of pile yarn tufts are secured to a base of woven, non-woven or knitted fabric by a stitching thread interlooped with such lower bights, and it is an object of this invention to provide such a tufted pile fabric and a method of making the same wherein the tufts are secured to the base in such a manner as to substantially reduce the amount of pile yarn required to form pile of a given height as compared to the amount of pile yarn used heretofore in forming tufted pile fabrics

It is a more specific object of this invention to provide a tufted pile fabric, whose tufts may be of common or varying heights, in the form of cut or uncut, or partially cut pile tufts, and wherein the upper surfaces of the lower bights of the pile tufts are positioned above the plane of the lower face of the backing fabric with stitching threads extending along beneath the backing fabric, and portions of the stitching threads extending upwardly into the plane of the backing fabric and through the lower bights of the tufts to secure the tufts to the backing fabric. The pile tufts may extend a relatively short distance into the backing fabric or be disposed entirely above the backing fabric, thereby further reducing the amount of pile yarn required to form pile tufts of a given height.

It is still another object of this invention to provide a method of making tufted pile fabrics of the character described which includes successively forming each of a plurality of pile yarns into a longitudinal row of pile tufts on the upper face of a backing fabric, while successively inserting the pile yarns through the backing fabric to form lower bight portions on the tufts. While the lower bight portions are being formed, stitching threads are positioned alongside the lower face of the backing fabric and through the successive lower bight portions to secure the tufts to the backing fabric, while each successive lower bight portion is displaced upwardly by drawing the pile yarns upwardly relative to the backing fabric so that portions of the stitching threads passing through the corresponding lower bight portions are displaced upwardly into the backing fabric. The tufts may be in the form of zig-zag pile loops with alternate lower bights in each row of loops being off-set laterally from intervening lower bights in the same row, or with all of the lower bights of each row of loops being in substantially longitudinal alignment with each other.

Some of the objects and advantages of the invention having been stated, others will appear as the description proceeds, when taken in connection with the accompanying drawings, in which

FIG. **1** is a diagrammatic plan view of one embodiment of the fabric of this invention show the pile tufts of each warpwise or longitudinal row in the form of raised loops of continuous pile yarn with the lower bights of the tufts being aligned in each such row;

FIG. **2** is a longitudinal sectional view through the fabric of FIG. **1** showing a stitching thread securing a row of tufts to the backing fabric with the upper surfaces of the lower bights of the tufts positioned within the backing fabric;

FIG. **3** is a diagrammatic bottom view of a portion of the pile fabric of FIGS. **1** and **2**;

FIG. **4** is a view similar to FIG. **2**, but wherein the tuft lower bights extend into the backing fabric to a lesser extent than in FIG. **2**;

FIG. **5** is a view similar to FIG. **4**, but wherein the tuft lower bights are entirely above the backing fabric;

FIG. **6** is a diagrammatic plan view of another embodiment of the tufted pile fabric wherein the pile tufts in each longitudinal row are in the form of zig-zag loops with successive lower bights thereof positioned in staggered relationship;

FIG. **7** is a diagrammatic bottom view of a portion of the pile fabric of FIG. **6**;

FIG. **8** is a longitudinal sectional view through a tufted pile fabric similar to that shown in FIG. **6**, but wherein adjacent pile loop rows originally formed of respective different types of pile yarns have been severed so that the resulting alternate U-shaped tufts are formed of a different type of pile yarn from that of which intervening U-shaped tufts in the same row are formed;

FIG. **9** is a longitudinal section through the fabric of FIG. **6** illustrating variant height pile tufts with the upper surfaces of the lower bights thereof positioned within the backing fabric as in FIG. **2**;

FIG. **10** is a view similar to FIG. **9**, but showing the tuft lower bights in an intermediate position; i.e., with the lower bights extending into the backing fabric to a lesser extent than in FIG. **9**; and

FIG. **11** is a view similar to FIGS. **9** and **10**, but showing the tufts in U-shaped form with their lower bights entirely above the backing fabric.

Referring more specifically to the drawings, although several representative embodiments of the tufted pile fabric of this invention are shown, all illustrated embodiments are characterized in that the lower bight of each pile tuft formed from the pile yarns has at least the upper surface thereof positioned above the plane of the lower or back face of the backing fabric or base, and stitching threads extending along the lower face of the backing fabric have stitch portions extending upwardly into the plane of the backing fabric and through the lower bights of the pile tufts to secure the tufts to the base fabric.

The tufted fabrics may be formed according to the method of this invention by apparatus such as is disclosed in our copending application Ser. No. 110,851, (now U.S. Pat. No. 3,677,206) filed concurrently herewith and entitled APPARATUS FOR MAKING TUFTED FABRICS, the disclosure of which is incorporated herein by reference. As shown in FIG. **2** of the accompanying drawings, the apparatus includes tuft-forming instrumentalities arranged in a lateral row transversely of the path of travel of a base or backing fabric **15** of any desired woven, nonwoven or knitted construction. Only one set of the tuft-forming instrumentalities is shown and comprises a vertically movable, pointed tufting needle **10**, a substantially horizontally movable latch needle **11** provided with a downwardly facing hook **11***a* and a latch **11***b* thereon, a laterally and vertically movable stitching thread guide **12**, and a pile former or pile wire **13**.

A relatively highly tensioned pile yarn P extends downwardly from a suitable source through the eye of each tufting needle **10**, and a relatively small and relatively loosely tensioned stitching thread S extends from

a suitable source through the eye of thread guide **12**. Each pile yarn P may include one or more textile strands of any desired natural and/or synthetic fibers suitable to provide the desired pile surface on the upper face of the fabric. Each stitching thread S is preferably of a translucent synthetic monofilament material and is of substantially smaller size than the pile yarns P so as to be barely visible and present very little projection along the lower face of backing fabric **15**.

In each cycle, tufting needle **10** loops pile yarn P over pile former **13** and moves downwardly to penetrate backing fabric **15**. Latch needle **11** then moves from left to right in FIG. **2** and through the lower bight of pile yarn to the position shown preparatory to thread guide **12** moving laterally from adjacent and below one side of the plane of latch needle **11** to the opposite side thereof. While moving laterally, thread guide **12** also moves upwardly to position thread S in hook **11***a* of needle **11**. In so doing stitching thread S extends from a previously formed pile yarn lower bight, past one side of the lower bight then penetrated by latch needle **11**, and through hook **11***a*.

Tufting needle **10** moves upwardly through backing fabric **15** and above the level of pile former **13** as latch needle **11** is moving inwardly, receiving thread S in the hook **11***a* thereof and then starts movement to the left in FIG. **2**. Needle **10** then again lays pile yarn over and across pile former **13** and, as needle **10** again starts downwardly, latch needle **11** draws stitching thread S through the last previously formed lower bight of pile yarn and through the immediately preceding loop of thread S during which latch **11**b is closed by the loops through which latch needle **11** is being withdrawn. Thus, as tufting needle moves downwardly, since pile yarn P is under relatively high tension, the pulling of the pile yarn P over pile former **13** causes pile yarn P to be pulled upwardly so that the last formed lower bight of the pile yarn is raised into or entirely above the backing fabric and so that at least the upper surface of the lower bight is positioned above the plane of the lower face of the backing fabric.

At the same time, the last formed lower bight pulls the loop of stitching thread last cast off of latch needle **11** upwardly against the lower face of backing fabric **15** while causing a portion of the stitching thread S to extend upwardly into or through backing fabric **15**, as the case may be. Between or during needle punctures, the backing fabric is advanced to the left in FIG. **2** and each of the pile yarns P is laid over pile former **13** which determines the length or height of each pile tuft above backing fabric **15**.

The laying of pile yarns over the pile formers may be effected by laterally shifting the pile formers relative to the tufting needles, either with or independently of the backing fabric, or by laterally shifting the tufting needles relative to the pile formers either with or relative to the backing fabric. The pile formers may be of the same or different heights or each of certain or all of the pile formers may be provided with loop-forming stages of different heights (as in FIG. **9**) selectively movable into loop-forming position to form variant-height tufts widthwise and/or lengthwise of the fabric. Also, some or all of the tufts of a given height or of varying heights may be cut, or all of the tufts may be in loop form.

The first embodiment of the fabric of this invention is shown in FIGS. **1**, **2** and **3** and comprises the base or backing fabric **15** which, by way of example, is shown in FIGS. **1** and **2** in the form of a woven fabric of warp yarns **15***a* and weft yarns **15***b* denoting respective lengthwise and widthwise dimensions of the fabric. Secured to backing fabric **15** is a plurality of lengthwise extending longitudinal rows of tufts **16** of pile yarns P. Tufts **16** are shown in the form of closed or uncut loops in FIGS. **1** and **2**, and the upper bights **16***a* thereof are raised; i.e., upper bights **16***a* are spaced a predetermined distance above the upper face of backing fabric **15**. In this particular embodiment, each lengthwise row of tufts **16** is formed from a continuous pile yarn.

All of the lower bights **16***b* of each lengthwise row of tufts **16** are disposed in lengthwise alignment with each other and are secured to backing fabric **15** by a common stitching thread S; i.e., a separate continuous stitching thread S is provided for each lengthwise row of tufts **16**. In this particular embodiment, the lower bight portions of the pile yarns extend through to the lower face of the backing fabric, but the upper surface of each lower bight **16***b* is positioned within the backing fabric so that such upper surface is positioned below the plane of the upper face of the backing fabric and above the plane of the lower face of the backing fabric. However, the bottom surfaces of the lower bights **16***b* may be flush with or protrude slightly below the lower face of the backing fabric.

Each stitching thread forms a closed loop stitch **17** (FIG. **3**) interconnecting each respective adjacent pair of lower bights **16***b*, with a portion of each stitch extending upwardly into the plane of the backing fabric and being looped through each respective lower bight **16***b* of the adjacent pair. However, the major portions of the stitches **17** extend entirely below and along the lower face of the backing fabric **15** to form chain stitching. As preferred, each chain stitch **17** is in the form of a loop whose two leg portions extend through the loop of the next adjacent chain stitch and through the adjacent lower bight **16***b* of the pile yarn such that adjacent leg portions of immediately adjacent pairs of tufts are encompassed by the respective chain stitches **17** at the lower bights **16***b*. This embodiment of the fabric may be formed by shifting a pile former **13** for each row of tufts **16** from side to side relative to the backing fabric **15** and respective tufting and stitching needles **10**, **11**, or by shifting laterally the backing fabric **15** and the tufting and stitching needles relative to the pile formers **13**. In either event the pile formers may bend or slightly upset the loops thereover during relative lateral shifting movement between the backing fabric **15** and the pile formers because the free front end portions of the pile formers are disposed within a few of the loops previously formed thereover.

Because of such relative lateral shifting movement, the upper bights **16***a* of the tufts **16** extend generally crosswise of the longitudinal rows and in substantially zig-zag relationship therealong. Although all of the tufts **16** are shown in loop form in FIGS. **1** and **2**, the upper bights **16***a* of some or all of the tufts **16** may be severed, if desired (See FIG. **8**). Such severing of the tufts may be effected, for example, by providing cutting blades on the free ends of certain or all of the pile formers **13** or by passing the fabric through a suitable shearing apparatus.

The fabrics shown in FIGS. 4 and 5 may be formed in essentially the same manner as the fabric of FIGS. 1, 2 and 3 and will therefore, bear the same reference characters where applicable. The fabric of FIG. 4 differs from that of FIGS. 1, 2 and 3 only in that the lower bights 16*b* of the pile tufts in FIG. 4 occupy an intermediate position relative to the backing fabric 15. In other words, the lower surfaces of the tuft lower bights 16*b* are spaced above the plane of the lower face of the backing fabric, and the upper surfaces of the tuft lower bights 16*b* may be substantially flush with or slightly below the plane of the upper face of the backing fabric 15.

The fabric of FIG. 5 differs from the fabrics of FIGS. 1–3 and 4 in that the pile tufts are entirely above the backing fabric. Thus, the lower surfaces of the tuft lower bights bear against the upper face of the backing fabric, and the stitch portions of the corresponding stitching thread S extend upwardly through the backing fabric and through the tuft lower bights 16*b* above the upper face of the backing fabric 15.

The fabric of FIGS. 6 and 7, like the fabrics of FIGS. 1–5, includes a backing fabric 15', which may include interwoven warp yarns 15*a*' and weft yarns 15*b*', with longitudinal rows of loop pile tufts 16' being formed from pile yarns P' secured to the backing fabric 15' by stitching threads S' extending along the lower face of the backing fabric and through the lower bights 16*b*' of the tufts 16'. However, instead of all of the lower bights 16*b*' of each row of loop pile tufts being in longitudinal alignment, as in FIGS. 1–5, the upper bights 16*a*' of the loops in each longitudinal row extend over and across corresponding warp yarns 15*a*' and the alternate lower bights 16*b*' are staggered or off-set laterally from the intervening lower bights 16*b*' of the same longitudinal row of loop pile tufts.

Thus, in each longitudinal row of loop pile tufts 16', alternate lower bights thereof are in substantially longitudinal alignment with each other, and intervening lower bights thereof are in longitudinal alignment with each other and are offset laterally from the latter alternate lower bights. As preferred, the alternate lower bights of any given longitudinal row of loop pile tufts, such as the centermost longitudinal row in FIG. 6, are positioned between and in substantially longitudinal alignment with intervening lower bights of the immediately adjacent longitudinal row of tufts on one side thereof. Similarly, the intervening lower bights of said given row are positioned between and in substantially longitudinal alignment with alternate lower bights of the immediately adjacent row of tufts on the other side thereof.

It can be appreciated, therefore, that each longitudinal row of lower bights at the juncture of two immediately adjacent longitudinal rows of loop pile tufts 16' is a composite row of lower bights in that it has certain or alternate lower bights formed from a different pile yarn than that of which certain other or intervening lower bights are formed. Further, as shown in FIG. 7, a separate stitching thread S' extending along the lower face of the backing fabric serves to secure each such composite row of lower bights to the backing fabric.

The lower bights 16*b*' of the tufts in each longitudinal row may occupy any of the positions occupied by the lower bights 16*b* in FIGS. 2, 4 and 5. Thus, at least the upper surfaces of the lower bights 16*b*' are positioned above the plane of the lower face of backing fabric 15', and the stitching threads S' have stitch portions 17' extending upwardly from the lower surface of the backing fabric into the plane thereof and through lower bights 16*b*' to secure the tufts 16' to the backing fabric 15'.

The fabric of FIGS. 6 and 7 may be formed by advancing the backing fabric through the tufting machine as in FIG. 2 and moving the tufting needles 10 laterally in one direction over respective pile formers 13 preceding alternate needle punctures and by moving the tufting needles laterally in the opposite direction preceding intervening needle punctures. Alternatively, instead of laterally shifting the tufting needles 10, it is apparent that the backing fabric, stitching needles 11 and pile formers 13 may be shifted laterally relative to the tufting needles 10.

The fabric of FIG. 8 may evolve from the fabric of FIGS. 6 and 7 utilizing at least two different types of pile yarns for forming at least two respective immediately adjacent longitudinal rows of zig-zag loop pile tufts 16', and thereafter severing the upper bights of the tufts. Thus, the fabric of FIG. 8 comprises a backing fabric 115 to which the lower bight portions 116*b* of a plurality of longitudinal rows of substantially U-shaped or cut pile yarn tufts 116 are secured, only one of the longitudinal rows being shown in FIG. 8 representing each of a plurality of rows. Certain or alternate U-shaped tufts 116 in the row shown are formed from a pile yarn of different type or characteristics than certain other or intervening U-shaped tufts in the same row. Assuming, for example, that alternate longitudinal rows of loop pile tufts 16' in FIG. 6 are formed from pile yarns of different characteristics than intervening longitudinal rows, upon severing the loop pile tufts 16' of the fabric of FIGS. 6 and 7 to form the fabric of FIG. 8, it is apparent that the latter fabric then will include transverse or weftwise rows of U-shaped tufts 116 of different characteristics as well as longitudinal rows thereof. In other words, certain or alternate U-shaped tufts 116 in each transverse row would be of different character than certain other or intervening U-shaped tufts in the same transverse rows. The pile yarns used in forming the respective tufts of relatively different characteristics may differ as to texture, composition, color, size or in any desired manner.

The longitudinal rows of lower bight portions 116*b* may be secured to backing fabric 115 in FIG. 8 by respective stitching threads S-2 in the same manner as any of the rows of lower bights heretofore described, with particular reference to FIGS. 2, 4, 5 and 7. As shown in FIG. 8, the lower surfaces of lower bight portions 116b are substantially flush with the lower face of backing fabric 115, and the upper surfaces of lower bight portions 116*b* are positioned above the plane of the lower face of backing fabric 115, for example.

The fabrics of FIGS. 9 and 10 differ from those heretofore described by having longitudinal rows of variant-height loop pile tufts. These fabrics may be formed in the manner of the fabric of FIGS. 6 and 7 with the exception that stepped pile formers 13*a* (FIG. 9) may be employed and selectively shifted longitudinally relative to the tufting needles and the backing fabric 20 to present loop-forming stages of different heights to the loop-forming zone of the tufting

machine. As shown in FIG. 9, the pile former 13*a* has a low stage 21 on its free forward end and a relatively high stage 22 spaced rearwardly from the free end of the pile former and over which respective relatively short or low loop pile tufts 23 and relatively high or long loop pile tufts 24 are formed in any desired order. The lower bights or bight portions 25 are positioned in and secured to backing fabric 20 by stitching threads 26 in FIG. 9 in the same manner as described with respect to FIG. 2 and therefore need not be further described. It should be noted that no "robbing" of pile yarn from preceding loops occurs in the forming of successive loops in order to obtain the desired heights thereof, because the loop pile tufts are formed over predetermined pile-forming surfaces of the pile formers. This ensures that there is clear line of demarcation between adjacent pile tufts of different heights in each row thereof.

The fabric of FIG. 10 is substantially the same as that of FIG. 11, with the exception that the tuft lower bights are positioned in and secured to the backing fabric in the manner described with respect to FIG. 4. Accordingly, like parts in FIGS. 9 and 10 bear the same reference characters and a further description of the fabric of FIG. 10 is deemed unnecessary.

The fabric of FIG. 11 also comprises a backing fabric 20*a* to which the lower bights 25*a* of rows of cut pile tufts may be secured by respective stitching yarns 26*a* in the manner described with respect to any of FIGS. 2, 4 or 5. In this instance, the tuft lower bights 25*a* are shown entirely above the backing fabric 20*a*. The fabric of FIG. 11 may be formed substantially in the manner of the fabric of FIG. 9 after which the loop pile tufts may be severed to form two rows of variant-height U-shaped or cut pile tufts from any given row of loop pile tufts previously formed as in FIG. 9, each row including relatively low or short U-shaped tufts 23*a* and relatively high or longer U-shaped tufts 24*a* arranged in any desired order. J-shaped tufts also may be provided, such as the J-shaped tuft 27 in FIG. 11, having one leg of the tuft longer than the other.

In the drawings and specification, there have been set forth preferred embodiments of the invention, and although specific terms are employed, they are used in a generic and descriptive sense only and not for purposes of limitation.

We claim:

1. A tufted pile fabric comprising a backing fabric, pile yarn tufts extending upwardly from the upper face of said backing fabric and arranged in a plurality of longitudinal rows thereon with at least some of said tufts being in the form of loop pile tufts, said tufts having lower bight portions with at least the upper surfaces thereof being positioned above the plane of the lower face of said backing fabric, and a plurality of stitching threads extending along said lower face of said backing fabric and having stitch portions extending upwardly into the plane of said backing fabric and through said lower bight portions of said tufts to secure the tufts to the backing fabric.

2. A tufted pile fabric according to claim 1, wherein said stitching threads are substantially smaller than the pile yarns of which said tufts are formed.

3. A tufted pile fabric according to claim 1, wherein the lower surfaces of said lower bight portions also are positioned above the plane of said lower face of said backing fabric.

4. A tufted pile fabric according to claim 1, wherein the lower surfaces of said lower bight portions are positioned upon said upper face of said backing fabric, and wherein said stitch portions of said stitching threads extend through said backing fabric so as to extend through said lower bight portions of said tufts.

5. A tufted pile fabric according to claim 1, wherein said tufts are of varying heights.

6. A tufted pile fabric according to claim 1, wherein at least some of said tufts are in the form of cut pile tufts.

7. A tufted pile fabric according to claim 1, wherein said tufts are in the form of rows of pile loops, each row being formed of a continuous pile yarn, all of the lower bight portions of any given row of pile loops being substantially in longitudinal alignment, and said stitching threads comprising a separate stitching thread forming a row of chain stitches for each row of bight portions.

8. A tufted pile fabric according to claim 1, wherein the tufts in at least one of said rows include a series of substantially U-shaped tufts with all the legs of the U-shaped tufts in said series being substantially aligned along the corresponding row.

9. A tufted pile fabric according to claim 8, wherein certain of the U-shaped tufts in said series are formed from a different type of pile yarn than certain other U-shaped tufts in said series.

10. A tufted fabric according to Claim 1, wherein at least some of the tufts in said longitudinal rows are substantially U-shaped with front and rear opposing legs projecting upwardly from each lower bight portion, certain tufts in each of at least some of said longitudinal rows being formed from one type of pile yarn, and certain other tufts in the same rows being formed from a different type of pile yarn.

11. A tufted fabric according to claim 10, wherein said stitching threads comprise a separate stitching thread interconnecting the lower bight portions of the tufts in each respective longitudinal row.

12. A tufted pile fabric according to claim 1, wherein each longitudinal row of tufts is formed from a continuous pile yarn with upper bights thereof extending back and forth in alternation in a generally zig-zag manner, and wherein all of the lower bight portions of each row of tufts are disposed in longitudinal alignment with each other.

13. A tufted pile fabric according to claim 1, wherein said tufts are in the form of longitudinal rows of zig-zag pile loops, the loops in each row being formed of a continuous pile yarn, and alternate lower bight portions of each row of pile loops being offset laterally from intervening lower bight portions thereof.

14. A tufted pile fabric according to claim 13, wherein alternate lower bight portions of at least one of said longitudinal rows are longitudinally aligned with intervening lower bight portions of an immediately adjacent row.

15. A tufted pile fabric according to claim 14, wherein said stitching threads comprise a separate continuous stitching thread of chain stitches interconnecting the alternate lower bight portions of said one of said longitudinal rows of pile loops with the intervening lower bight portions of said immediately adjacent row.

16. A tufted pile fabric comprising a backing fabric, a plurality of substantially parallel longitudinal rows of loop pile tufts extending upwardly from the upper face of said backing fabric, each row of tufts being formed from a continuous pile yarn with the upper bights thereof extending back and forth in alternation in a generally zig-zag manner, each row of tufts having lower bight portions with alternate lower bight portions offset laterally from intervening lower bight portions thereof, the alternate lower bight portions in at least one of said longitudinal rows of loop pile tufts being longitudinally aligned with intervening lower bight portions of an immediately adjacent row and a plurality of stitching threads extending along the lower face of said backing fabric and having stitch portions extending through said lower bight portions to secure the loop pile tufts to the backing fabric.

17. A tufted pile fabric according to claim 16, wherein said stitching threads comprise a common stitching thread whose stitch portions extend through and interconnect those alternate lower bight portions of said at least one of said longitudinal rows of loop pile tufts with said intervening lower bight portions of said immediately adjacent row.

18. A tufted pile fabric comprising a backing fabric, substantially U-shaped pile yarn tufts extending upwardly from the upper face of said backing fabric and arranged in a plurality of longitudinal rows thereon, each tuft having a lower bight portion and front and rear opposing legs projecting upwardly from the lower bight portion thereof, all of the front and rear legs and the lower bight portions of the tufts in each longitudinal row being disposed in longitudinal alignment, at least the upper surfaces of said lower bight portions being positioned above the plane of the lower face of said backing fabric, stitching threads forming rows of chain stitches extending along the lower face of said backing fabric and having stitch portions extending through said lower bight portions to secure the tufts to said backing fabric, certain tufts in each of at least some of said longitudinal rows being formed from one type of pile yarn, and certain other tufts in the same rows being formed from a different type of pile yarn.

19. A tufted pile fabric according to claim 18, wherein said stitching threads comprise a separate stitching thread forming a row of stitch portions interconnecting and extending through the lower bight portions of the tufts in each respective longitudinal row.

20. A tufted pile fabric comprising a backing fabric, tufts of pile yarn extending upwardly from the upper face of said backing fabric and arranged in longitudinal rows thereon, said tufts having lower bights with at least the upper surfaces of the lower bights positioned above the plane of the lower face of said backing fabric, a plurality of stitching threads of substantially translucent synthetic material extending along the lower face of said backing fabric and forming rows of chain stitches having stitch portions thereof extending upwardly into the plane of said backing fabric and through said lower bights of said tufts to secure the tufts to the backing fabric, and said stitching threads being of relatively small size as compared to the size of said pile yarns so as to be barely visible against the lower face of the backing fabric and to present very little projection on the lower face of the backing fabric.

21. A method of making tufted pile fabrics permitting use of less pile yarn for obtaining any given height of pile; said method comprising successively forming each of a plurality of pile yarns into a longitudinal row of pile tufts on the upper face of the backing fabric, while successively inserting the pile yarns through the backing fabric to form lower bight portions on the tufts, while positioning stitching threads alongside the lower face of the backing fabric and through the successive lower bight portions to secure the tufts to the backing fabric, and while upwardly displacing each successive lower bight portion by drawing the pile yarns upwardly relative to the backing fabric so that portions of the stitching threads passing through the corresponding lower bight portions are displaced upwardly into the backing fabric.

22. A method according to claim 21, wherein the step of successively inserting the pile yarns through the backing fabric includes successively inserting each pile yarn at substantially longitudinally aligned points such that the lower bight portions of each row of tufts are positioned in a corresponding longitudinal row, and the step of positioning the stitching threads comprising positioning a common stitching thread through the successive lower bight portions of each row thereof.

23. A method according to claim 21 wherein the tufts are formed as loops and further including severing at least some of the loops to form substantially U-shaped pile tufts therefrom.

24. A method according to claim 21, in which the step of upwardly displacing each successive lower bight portion includes drawing the pile yarns upwardly to a position entirely above the upper face of the backing fabric so that the lower bight portions are positioned upon the upper face of the backing fabric.

25. A method according to claim 21, wherein the step of positioning the stitching threads comprises looping a portion of each stitching thread, extending from a previously formed lower bight portion, around one leg of a next succeeding lower bight portion and through the same, and then drawing the looped portion of the stitching thread through a previously formed loop portion thereof, also extending from the said previously formed lower bight portion, so as to form a stitch interconnecting the previously formed and next succeeding lower bight portions.

26. A method according to claim 21, in which the forming of the pile yarns into pile tufts, the upward displacing of each successive lower bight portion and the inserting of the pile yarns through the backing fabric collectively comprise drawing each pile yarn upwardly and then over and across a corresponding pile former and then inserting the same pile yarn downwardly through the backing fabric to form a corresponding loop over the pile former and to form a corresponding lower bight portion while tightening the pile yarn over the pile former to pull upwardly a lower bight portion previously formed from the same pile yarn while also pulling upwardly a portion of the stitching thread passing through the said previously formed lower bight portion.

27. A method according to claim 21, which includes looping each pile yarn over a respective pile former and effecting relative lateral movement therebetween during the forming of the tufts so as to form zig-zag loop pile tufts in each row.

28. A method according to claim 21, wherein each pile yarn is continuous, and wherein the step of inserting the pile yarns through the backing fabric includes alternately inserting each pile yarn at points laterally offset from intervening points at which the same pile yarn is inserted so that the tufts take the form of zig-zag loops in each row.

29. A method according to claim 28, wherein the alternate inserting of each pile yarn at points laterally offset from intervening points further includes inserting alternate lower bight portions of at least one of the pile yarns through the backing fabric in longitudinal alignment with intervening lower bight portions of an immediately adjacent pile yarn of different characteristics than said one of the pile yarns, and then severing zig-zag loops in both rows thus formed to transform such rows of loops into rows of cut pile tufts, with each of the rows thus transformed having longitudinally aligned, alternately arranged, cut pile tufts of different characteristics.

* * * * *