J. BROWELL.
SECTIONAL CHIMNEYS.

No. 193,687. Patented July 31, 1877.

Fig. 1

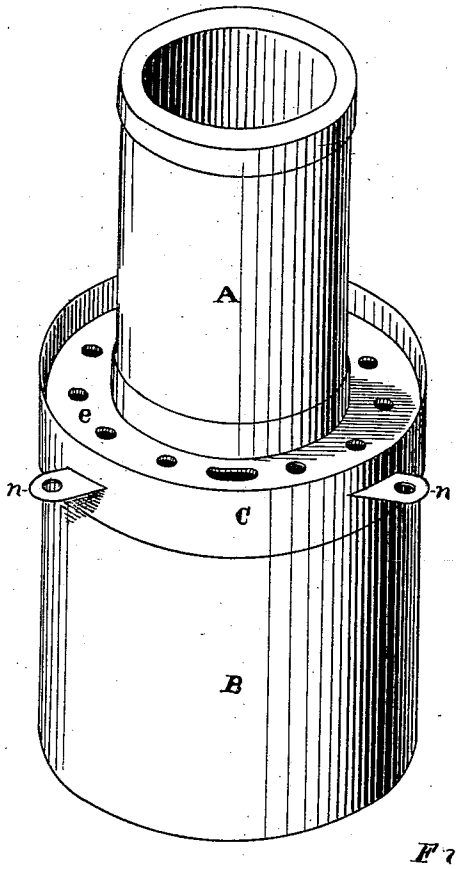

Fig. 2

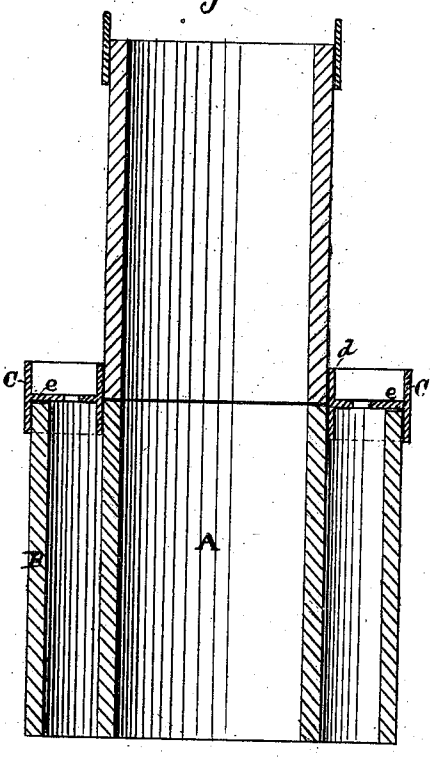

Fig. 3.

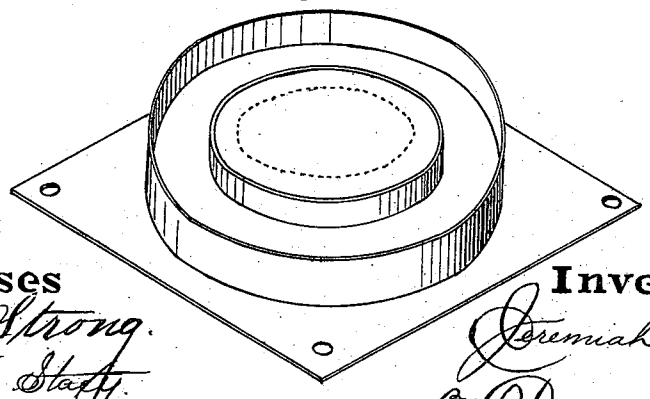

Witnesses
Geo. H. Strong.
Newyn J. Staff.

Inventor
Jeremiah Browell
by Dewey & Co.
Attys.

N. PETERS, PHOTO-LITHOGRAPHER, WASHINGTON, D. C.

UNITED STATES PATENT OFFICE.

JEREMIAH BROWELL, OF SAN FRANCISCO, CALIFORNIA.

IMPROVEMENT IN SECTIONAL CHIMNEYS.

Specification forming part of Letters Patent No. **193,687**, dated July 31, 1877; application filed June 8, 1877.

To all whom it may concern:

Be it known that I, JEREMIAH BROWELL, of the city and county of San Francisco and State of California, have invented an Improvement in Sectional Chimneys; and I do hereby declare the following to be a full, clear, and exact description thereof, reference being had to the accompanying drawings.

My invention relates to such chimneys as are composed of tubular sections, either single or double, placed one upon the other, and secured in place so as to form a continuous flue.

In putting together a chimney of this kind it is necessary to protect and cover the joints permanently, and to stay the meeting ends of the sections so that they will not be displaced by shocks or jars. This is especially necessary in a country which is subject to earthquakes, and where the building in which the chimney is constructed is liable to settle, as the slightest disturbance of a long chimney, thus constructed, is liable to displace the sections and open the joints, so that the flue becomes dangerous, on account of the liability of sparks escaping through the cracks or open joints and setting fire to the house.

My invention provides what I call a combined joint-band and diaphragm, which is so constructed that it embraces the joints closely, and stays the ends of the sections in place by serving as a brace to keep the joints in their proper relative position.

Referring to the accompanying drawings, Figure 1 is a perspective view; Fig. 2, a vertical sectional view.

Let A represent the inside tube, and B the outer tube, of a double-wall chimney of the class which is constructed of tubular sections, as above specified. The outside tube B is enough larger in diameter than the inside tube to leave an intervening annular space between the two, which space serves the double purpose of a hot-air space, with which heating-pipes can be connected and led to the various rooms of a house for warming purposes, and as a protection against the escape of sparks and overheating of the outside wall of the chimney.

For the purpose of binding together the meeting ends of the outside sections, and fixing the two tubes in their proper relative position, I employ what I call a combined joint-band and diaphragm brace.

This device consists of an outside band, *c*, and an inner band, *d*, the two being united by a diaphragm or web, *e*. This diaphragm might be a solid plate, but I prefer to perforate it, as hereinafter specified, in order to allow a free circulation of air from top to bottom of the air-space.

The web or diaphragm connects the two bands at about their middles, so that when a section of the chimney has been placed in position the outer band is fitted down over its ends until the diaphragm rests upon its top, while the inner band fits the outside of the inner tube or section.

The lower end of the next outside section is then pressed down inside of the outside band C, so as to rest upon the diaphragm. The outside band thus forms a cover for the joint, and binds the two ends of the section together, thus preventing displacement, while the diaphragm and inside band preserve the position of the two tubes. The portion of the diaphragm which crosses the air-space I perforate with holes, or single connecting-bars could be used so as to permit communication of air through it. The outside band C I provide with lugs *n*, in which holes are made so that wires or brace-rods can be passed through them for binding the chimney together. After the sections have been thus placed I cover the joint and band with cement so as to effectually close every crack.

The bottom section of the chimney ordinarily rests upon a plate. Instead of this plate I use a band and diaphragm, as above described, the band of which is only half as wide as the band which covers a joint. The diaphragm projects from the lower edge of the band, so that the section will fit inside of it, while the lower edge of the band and diaphragm rest upon the top of the fire-place, as clearly shown in Fig. 3.

I thus provide a simple, convenient, and ef-

fective device for connecting and binding the ends of the sections together and preventing displacement.

Having thus described my invention, what I claim, and desire to secure by Letters Patent, is—

A combined joint-band and diaphragm, consisting of the outer band C, diaphragm or web *e*, and inner band *d*, in combination with a sectional chimney, substantially as and for the purpose described.

In witness whereof I have hereunto set my hand and seal.

JEREMIAH BROWELL. [L. S.]

Witnesses:
O. T. STACY,
F. A. BROOKS.