March 5, 1946. J. BAUMFALK 2,395,798

TRAFFIC CONTROL SYSTEM

Filed Dec. 17, 1942 3 Sheets-Sheet 1

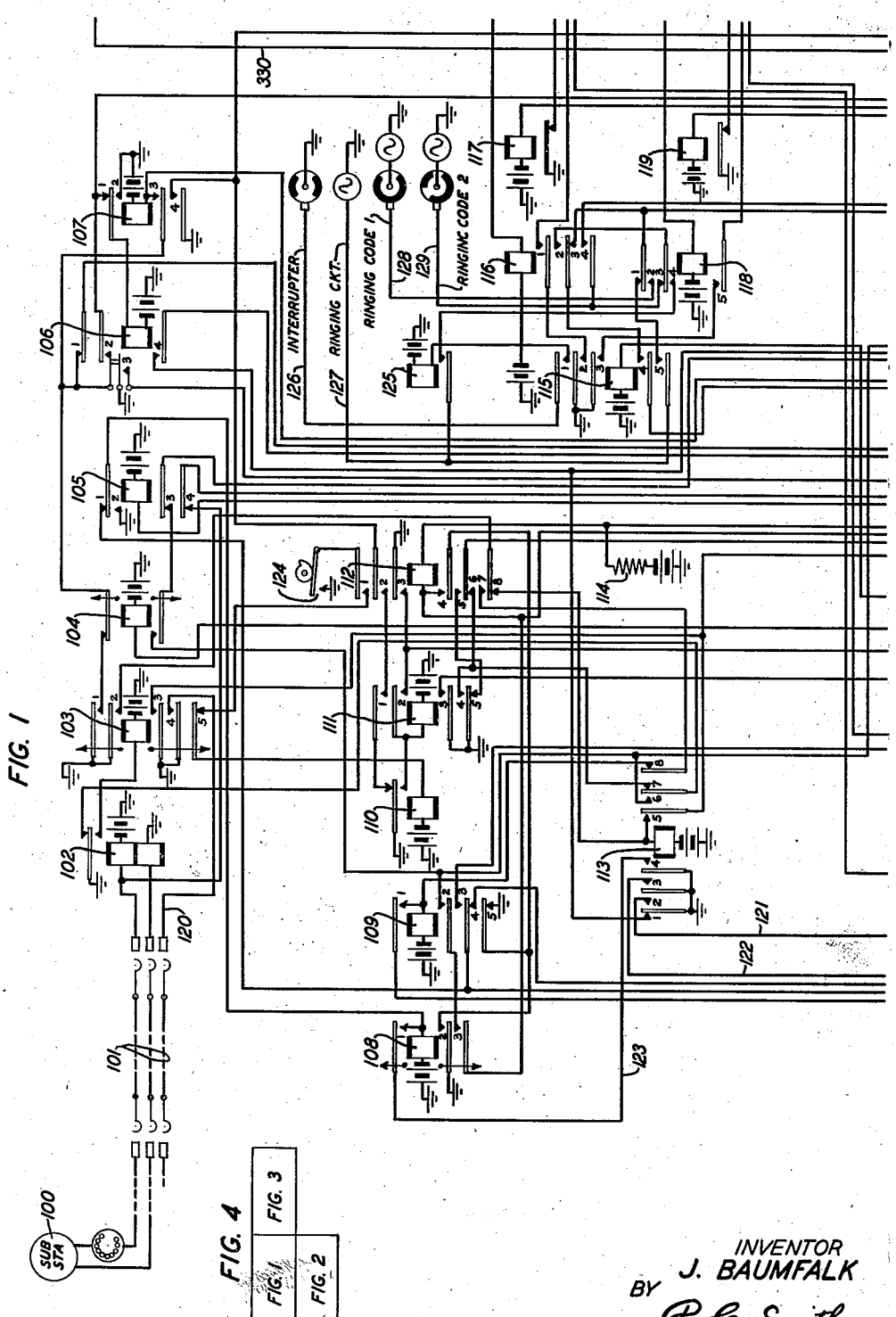

FIG. 1

FIG. 4

FIG. 3	
FIG. 1	FIG. 2

INVENTOR
J. BAUMFALK
BY
P. C. Smith
ATTORNEY

March 5, 1946. J. BAUMFALK 2,395,798

TRAFFIC CONTROL SYSTEM

Filed Dec. 17, 1942 3 Sheets-Sheet 2

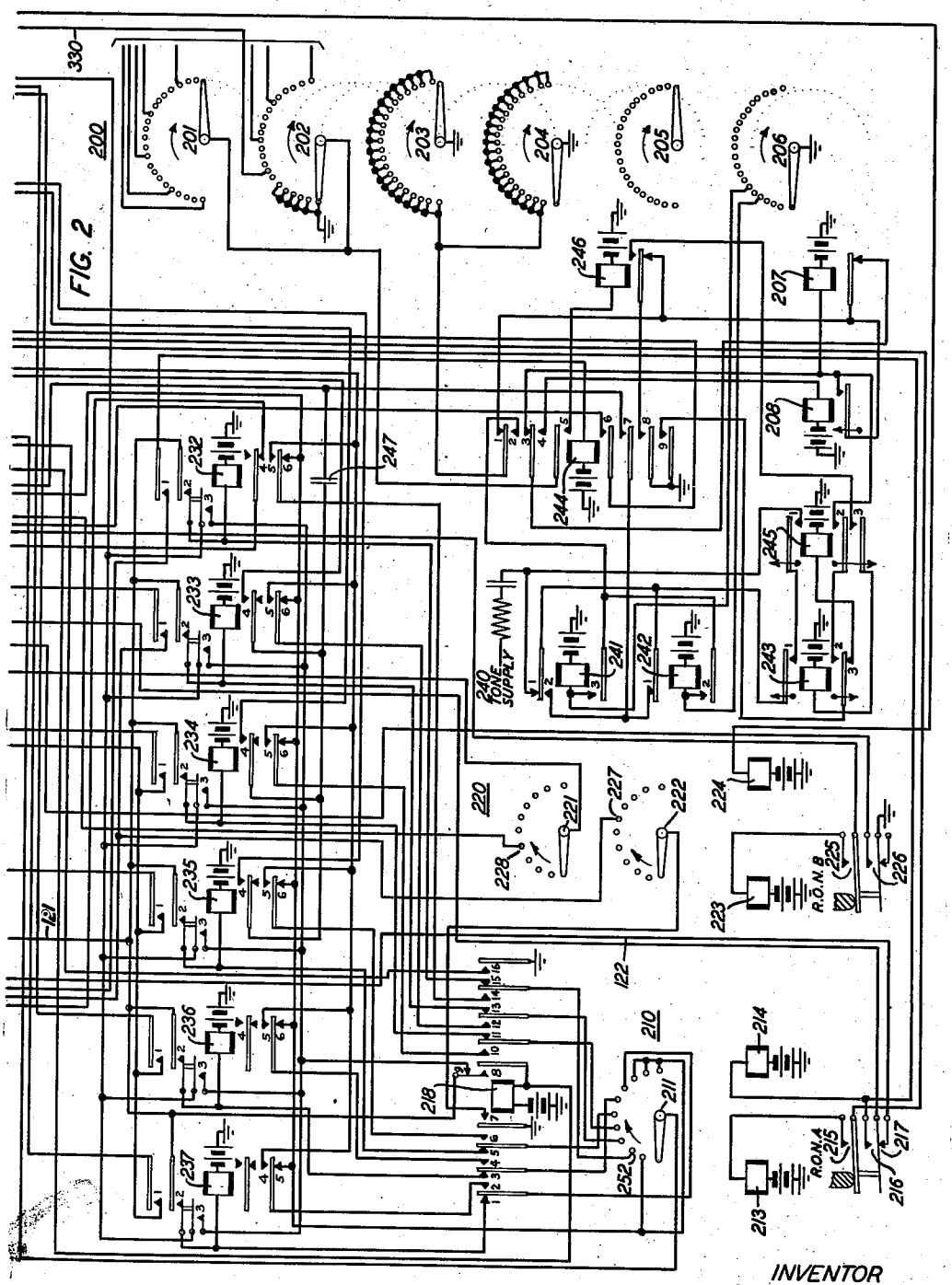

FIG. 2

INVENTOR
J. BAUMFALK

BY
P. C. Smith

ATTORNEY

March 5, 1946. J. BAUMFALK 2,395,798

TRAFFIC CONTROL SYSTEM

Filed Dec. 17, 1942 3 Sheets-Sheet 3

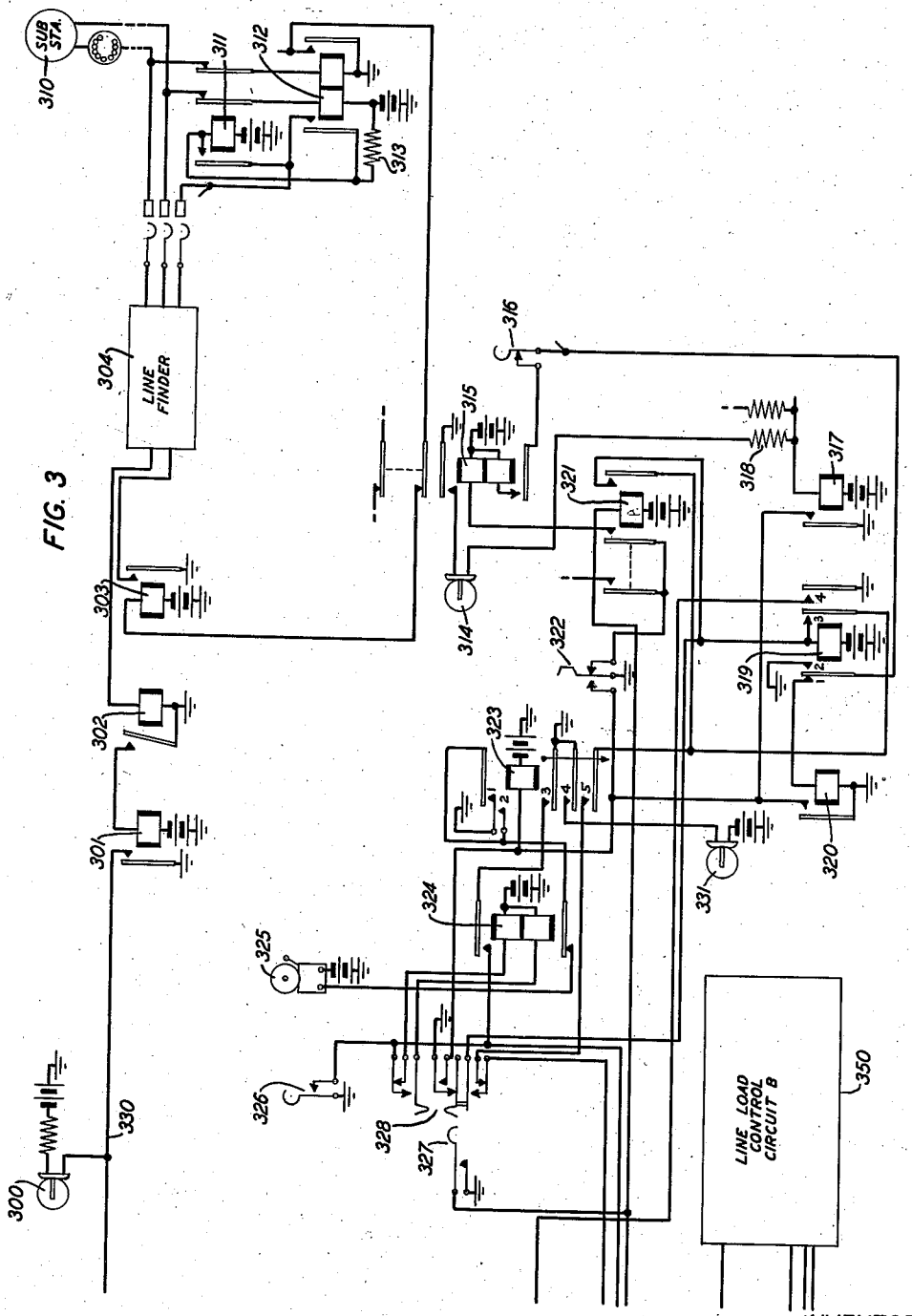

FIG. 3

INVENTOR
J. BAUMFALK

BY
P. C. Smith

ATTORNEY

Patented Mar. 5, 1946

2,395,798

UNITED STATES PATENT OFFICE

2,395,798

TRAFFIC CONTROL SYSTEM

John Baumfalk, Clifton, N. J., assignor to Bell Telephone Laboratories, Incorporated, New York, N. Y., a corporation of New York

Application December 17, 1942, Serial No. 469,299

12 Claims. (Cl. 179—19)

This invention relates to telephone systems and has for its object the control of telephone traffic loads in emergencies.

In the case of emergencies such as attack by enemy forces, it is apparent that it might be desirable to deny service to private subscribers in order that the central office equipment be adequate to handle military and civilian defense traffic. For this purpose it has been suggested that the telephone lines may be divided into several groups or classes and manual keys provided by which service may be cut off from the different classes of lines according to the requirements of the emergency.

It is the object of the present invention to provide means to control the removal of classes of lines from service and the restoration of them to service under centralized remote control.

To guard against unauthorized persons interfering with service, this centralized control means is responsive only to a series of operations not likely to be performed accidentally and a code is employed which differs from any used in service.

More specifically, means is provided for removing the classes of lines from service responsive to a predetermined number of identical, successively dialed digits and for restoring the lines to service responsive to a similar operation but employing a different digit.

In addition means is provided, responsive to the dialing of the same digit a predetermined plurality of times, for obtaining an indication of the busy condition of the equipment used by subscribers in originating connections.

Means is also provided for ascertaining whether any group of lines has been removed from service and which group or groups.

These and other features of the invention will be more clearly understood from a consideration of the following description in connection with the drawings in which:

Figs. 1 and 2 show the remote control equipment; and

Fig. 3 shows both the line load control equipment and the means for checking the busy condition of the call originating switches.

When it becomes desirable to employ line load control in a particular office, a study will be made of the subscriber's lines terminating in that office for the purpose of dividing the lines into classes in accordance with their importance in the case of an emergency. Lines such as police station lines, fire station lines, hospital lines, etc., will be put in class A and will receive service under all circumstances. The division of the remaining lines into classes B and C will be on a traffic basis so that the removal of either class will relieve the traffic load in all parts of the office. The line load control circuit shown in detail in Fig. 3 is that belonging to class C, while the load control circuit for the class B lines is indicated by the box 350.

The subscriber's line 100 and the connecting link 101 are to be taken as illustrative only of any desirable means of connecting an authorized official line with the remote control equipment shown. This equipment may be seized as indicated over a selector terminal bank or may be reached through an operator's position or over an interoffice trunk in which case suitable terminating jacks would be provided.

When a connection has been established with the remote control equipment, a circuit is completed from battery through the upper winding of relay 102 over the incoming connection to the calling dial and back to ground through the lower winding of relay 102. Relay 102 in operating closes an obvious circuit for relay 103 which is slow to release. Relay 103 at contact 4 connects ground to the sleeve conductor 120 thereby marking the circuit busy and holding the switches over which the connection was extended to the remote control circuit. At contact 2, relay 103 completes a circuit over contact 8 of relay 112 to the winding of relay 113 and battery. Relay 113 operates and locks over contact 5 to ground at contact 3 of relay 103 independent of relay 112. Relay 113 connects ground to conductors 121, 122 and 123 to provide locking circuits to be described hereinafter. Ground on conductor 122 also extends over normal contact 217 of switch 210 to the winding of relay 104 and battery, operating relay 104.

Switches 210 and 220 are rotary switches, switch 210 including brush 211 and off-normal contacts 215 to 217. The switch is rotated by stepping magnet 214 and restored to normal by release magnet 213. Switch 220 includes brushes 221 and 222, off-normal contacts 225 and 226, is advanced by stepping magnet 224 and is restored by release magnet 223.

When the authorized person or official located at substation 100 next operates his dial, relay 102 falls back, closing a circuit from ground over the back contact of relay 102, contact 6 of relay 113, lower contact of relay 104, contact 3 of relay 105, winding of magnet 214 to battery. The first step of switch 210 opens contact 217 and closes contacts 215 and 216. Contact 217 opens the

previously traced circuit for relay 104 but relay 104 is slow to release and before relay 104 can open its contacts, contact 216 closes a circuit for relay 104 in parallel with magnet 214. Because of its slow-to-release character, relay 104 remains operated between the pulses which operate magnet 214 to advance switch 210.

In order to render the remote control equipment effective, a predetermined digit, for example, the digit 2 must be dialed a plurality of times. At the end of the first digit, brush 211 will rest on contact 252 and the circuit of relay 104 will be opened long enough to permit that relay to release. When relay 104 closes its upper contact, a circuit is completed from ground over contact 1 of relay 103, upper contact of relay 104, contact 1 of relay 106, brush 211, terminal 252, contact 15 of relay 218 to the winding of relay 232 and battery. Relay 232 locks over contact 2 to ground on conductor 121. Relay 232 also closes a circuit from battery through winding of relay 106, contact 1 of relay 107, contact 3 of relay 232, contact 9 of relay 218, to ground on conductor 121. Relay 106 operates and closes a holding circuit for itself over contact 1 of relay 107, contact 2 of relay 106, back contact of relay 104, contact 1 of relay 103 to ground. At contact 3, relay 106 closes a circuit from ground through the winding of relay 218, to battery. Relay 218 operates and locks over its contacts 8 to grounded conductor 121. Relay 218 opens the original operating circuit for relay 106, closes a circuit from ground on its contacts 16, contact 4 of relay 106, off-normal contacts 215 to the winding of release magnet 213 and battery, thereby restoring switch 210 to normal, opening contacts 215 and 216, and reclosing contact 217.

The dial is now reoperated to again transmit the digit 2. Relay 102 responds to the dial pulses as before and again operates relay 104 which in turn opens the holding circuit of relay 106, permitting that relay to release. Brush 211 is advanced into contact with terminal 252 in the manner previously described. At the end of the digit, relay 102 remains operated, relay 104 releases and the circuit previously traced to the brush 211 is closed. However, since relay 218 is now operated, the circuit extends over terminal 252, contact 14 of relay 218, contact 5 of relay 232, to the winding of relay 107 and battery. Relay 107 operates and locks over its contact 3, back contact of relay 104 to ground at contact 1 of relay 103. At contact 2 relay 107 closes an obvious circuit for relay 106 which now operates. At contact 4 relay 107 closes a circuit for rotary magnet 224 of switch 220 advancing the switch one step to close contacts 225 and 226. Since relay 218 is still operated, the operation of relay 106 closes the previously traced circuit for release magnet 213 and switch 210 is restored to normal.

When the dial is operated to transmit the next digit 2, the holding circuit for relay 107 is opened and that relay releases in turn releasing relay 106 and magnet 224.

Following each dialing of the digit 2, relay 107 is operated and switch 220 advanced one step. When the switch 220 has advanced a predetermined number of steps, for example, six steps, brush 222 engages terminal 227 and a circuit is closed from ground at contact 7 of relay 218, brush 222, terminal 227, contact 4 of relay 109, contact 1 of relay 232 to the winding of relay 244 and battery. Relay 244 controls switch 200 to test the condition of the call originating equipment in the office. Relay 108 operates in parallel with relay 244, the circuit extending as above traced from ground to contact 4 of relay 109 and thence over contact 1 of relay 105 to the winding of relay 108 and battery. Relay 108 locks over contact 1 to ground on conductor 123.

Referring to Fig. 3, substation 310 represents any one of the subscribers' lines in the office at which the remote control equipment is located. When a call is originated on line 310, line relay 312 is operated. Relay 312 connects battery through resistance 313 in parallel with battery through cut-off relay 311 to the sleeve contact individual to the line in the various line finders which have access to the line, to mark the line as calling. In addition, line relay 312 connects ground to the winding of group relay 303. Relay 303 is common to the group of lines including line 310 and operates in response to the initiation of a call on any line of this group. When operated, relay 303 connects ground to the start circuit of a group of line finders of which line finder 304 is one. The line finder 304 operates to find the calling line and, when the line is found, cut-off relay 311 is operated and locked to the sleeve conductor under the control of the line finder circuit. The operation of cut-off relay 311 releases line relay 312, in turn releasing group relay 303 unless some other line in the group is also calling.

As each finder of the group of finders is taken for use it extends the start circuit to the next finder and subsequent calls in the group of lines including line 310 or in any other group to which these finders have access will be served by line finders in the group including line finder 304 in rotation. Each finder of the group, when idle, connects battery to the winding of relay 302 so that relay 302 remains operated as long as there is one idle line finder in the group. When the last finder has been taken for use, relay 302 releases operating relay 301 which thereupon connects ground to conductor 330 lighting lamp 300. Conductor 330 is also connected to a terminal of switch 200.

When it is decided to provide emergency load control in an office the back contact of a relay, such as relay 315, is inserted in the circuits of all group relays such as relay 303 for class B and C lines. The function of relay 315 will be discussed hereinafter. It is to be understood that the arrangement is equally applicable to offices employing other types of line finders or to those employing line switches. In the latter case the contacts of the relay like relay 315 will be inserted in the battery supply circuit of the line switches. The line finders serving lines in class A will not be altered. Line finder 304 is assumed to be of the type disclosed in Patent 1,799,654 to R. L Stokely, April 7, 1931.

With relay 244 operated, a circuit is closed from tone source 240, which may be the source of dial tone, over contact 1 of relay 241, contact 1 of relay 242, contact 7 of relay 244, contact 4 of relay 105 to the tip conductor of the incoming circuit, thereby transmitting a preliminary or warning tone to the substation 100 indicating that the circuit is ready to test the condition of the line finder groups. Relay 244 also closes a circuit from ground at its contact 9, contact 3 of relay 243 to the winding of relay 245 and battery. A circuit is also closed from battery through the winding of relay 246, contact 5 of relay 244 to brushes 201 and 202 of switch 200. Direct ground is connected to the first six terminals of

the arc served by brush 202 and, therefore, in the first six positions of brush 202, the circuit of relay 246 is completed to ground and relay 246 operates. With relays 245 and 246 operated, a circuit is closed from battery through the winding of relay 243, contact 3 of relay 245, front contact of relay 246, contact 8 of relay 244 to ground. Relay 243 operates in this circuit, opening the circuit of relay 245 which releases slowly, in turn opening the circuit of relay 243, which likewise releases slowly. During the time that relays 243 and 245 are operated, a circuit is closed from battery through the winding of stepping magnet 207, contact 2 of relay 245, contact 2 of relay 243 to ground at contact 9 of relay 244. Switch 200 is, therefore, advanced over its first six positions under the control of relays 243 and 245.

When brush 206 reaches position 5, a circuit is closed from ground over brush 206 in position 5 to the winding of relay 242 and battery. Relay 242 locks over its contact 2, contact 2 of relay 244, to ground over brush 204. At contact 1, relay 242 opens the tone circuit to terminate the preliminary tone.

When switch 200 reaches position 7, the circuit of relay 246 is open and relay 246 releases and closes a circuit from battery through the winding of relay 208, contact 4 of relay 244, back contact of stepping magnet 207, back contact of relay 246 to ground at contact 8 of relay 244. Relay 208 operates slowly in this circuit and, when operated, closes a circuit from battery through the winding of magnet 207, front contact of relay 208, back contact of relay 246 to ground at contact 8 of relay 244. Magnet 207 operates, opening the circuit of relay 208 which releases, in turn opening the magnet circuit. Magnet 207 releases, stepping switch 200 to position 8. While switch 200 was in position 7, a circuit was closed from ground over brush 206 in position 7 to the winding of relay 241 and battery. Relay 241 operates, locks over its contact 3 to ground in parallel with relay 242 and prepares a new tone circuit.

Conductor 330, individual to the group of lines containing line 310 as indicated in Fig. 3, is connected to the terminal of brush 202 in position 8. If this group of line finders still contains one or more idle finders, no ground will be connected to conductor 330 and switch 200 will be advanced to position 9 under the control of relay 208 as described for the advance to position 8. Assuming, however, that the entire group of line finders is busy, so that ground is connected to conductor 330, a circuit will be closed from ground on conductor 330 over brush 202, contact 5 of relay 244 through the winding of relay 246 to battery. Relay 246 operates, opening the circuit of relay 208 and closing a circuit from ground, at contact 8 of relay 244, front contact of relay 246, contact 3 of relay 245 to the winding of relay 243 and battery. As described in the advance of switch 200 to position 8, relays 243 and 245 close a circuit for stepping magnet 207 which steps switch 200 to position 9. At the same time, a circuit is closed from tone source 240 over contact 1 of relay 245, contact 1 of relay 243, contact 2 of relay 241 to contact 7 of relay 244 and thence as previously traced to the tip conductor of the incoming circuit, indicating that the group of line finders was busy.

Similarly, switch 200 is stepped over cantacts connected to busy line finder groups under the control of relays 246, 243 and 245, transmitting an impulse of tone to indicate the busy group, and over groups containing one or more idle line finders under the control of relay 208 without transmitting a tone.

A listening operator or official may, by counting the number of tone impulses, learn the number of line finder groups which are busy.

After all of the line finder groups have been tested, switch 200 will continue to advance under the control of relay 208 until it reaches position 1 again where relays 241 and 242 will be released and the functions above described will be repeated as long as the remote control circuit is held.

At any time after the official hears the preliminary tone signal, he may disconnect, thereby releasing relay 102 followed by relays 103, 113, 108, 218, 232, 244, 241, 242 and 245. Since relay 103 is slow to release, relay 102 in releasing closes a circuit from ground at its back contact, over contact 6 of relay 113, contact 6 of relay 244, winding of relay 112 to battery through resistance 114. Relay 112 operates in this circuit and locks over its contact 4 to ground at contact 2 of relay 108, and contact 5 of relay 109. The operating circuit of relay 112 is opened when relay 113 releases. Relay 112, in operating, closes a circuit from ground over contact 5 of relay 111, contact 5 of relay 112, off-normal contact 225 of switch 220 to battery through the winding of release magnet 223 thereby restoring switch 220 to normal.

Relay 112, in operating, starts the measurement of a time interval within which the remote control equipment remains in readiness for further operation. To this end, relay 112 closes a circuit from ground over interrupter 124, contact 1 of relay 112, contact 5 of relay 103, winding of relay 110 and battery. Relay 110 operates at each closure of the interrupter contact. At the first closure of the front contact of relay 110, an obvious circuit is closed for relay 111 which locks over its contact 2 to ground at contact 3 of relay 112. When the interrupter 124 opens its contact, relay 110 releases closing a circuit from ground over its back contact, contact 1 of relay 111, contact 2 of relay 112 to the winding of stepping magnet 224 of switch 220. Switch 220 is therefore stepped under the control of interrupter 124 until brush 221 engages terminal 228. The speed of interrupter 124 and the position of terminal 228 are selected so that sufficient time is allowed for the remote control circuit to be selected, for example, 30 seconds. When brush 221 reaches terminal 228 a circuit is closed from ground over contact 3 of relay 111, brush 221, terminal 228 to battery through resistance 114 in shunt of the winding of relay 112, causing relay 112 to release. Relay 112 at contact 3 opens one locking circuit for relay 111 but relay 111 remains operated to ground over off-normal contact 226. With relay 112 released, a circuit is closed from ground at contact 4 of relay 111, contact 6 of relay 112, off-normal contact 225, winding of release magnet 223 to battery, thereby restoring switch 220 to normal.

If the official disconnects before switch 200 completes its cycle, the release of relay 113 in turn releases relays 232 and 244 as above described. With relay 244 released, a self-interrupting circuit controls the stepping magnet 207 which may be traced from battery through the winding of magnet 207, contact 3 of relay 244, back contact of magnet 207, contact 1 of relay 244, to ground over brush 203 or brush 204.

When brush 203 is returned to the position shown, the circuit of magnet 207 will be opened, bringing the switch to rest.

However, if the official desires to remove one of the classes of lines from service, he will reestablish connection with the remote control circuit before the end of the time-out period and will dial a different digit the same number of times that he previously dialed the digit 2. The digits used for particular functions have been selected arbitrarily, but others might be employed by changing the connections of relays 232 to 237 at the contacts of relay 218. The reselection of the remote control circuit operates relays 102 and 103. Since relay 112 is held operated, relay 113 cannot operate, but a circuit is closed from ground over contact 2 of relay 103, contact 7 of relay 112, contact 8 of relay 113 to battery through the winding of relay 109. Relay 109 operates in this circuit and locks over its contact 1, contact 4 of relay 232 to ground at contact 3 of relay 103. When relay 109 operates, it opens the locking circuit for relay 112 and that relay releases. With relay 112 released, relay 113 is permitted to reoperate. With relay 109 operated, relays 234 to 237 are rendered effective. Prior to the operation of relay 109 only relays 232 and 233 are effective.

Assuming that it is desired to remove from service the class C lines which include line 310, the official will dial the digit 5 at least seven times. Switch 210 is advanced in the manner previously described until it reaches position 5. When relay 102 remains operated and relay 104 released following the first digit, the circuit previously traced is completed from ground at the contact of relay 103 to brush 211 and over the fifth contact of brush 211, contact 5 of relay 218 to the winding of relay 235 and battery. Relay 235 operates and locks over its contact 2 to ground on conductor 121. With relay 235 operated, relay 106 is operated, the circuit extending over contact 3 of relay 235 instead of over contact 3 of relay 232. Relay 106 operates, in turn operating relay 218 and restoring switch 210 to normal. When brush 211 is advanced to position 5 in response to the second digit, relay 107 is operated, in turn operating relay 106 and stepping switch 220. When switch 220 has been advanced to position 7, a circuit is closed from ground at contact 7 of relay 218, brush 222, terminal 227, contact 3 of relay 109, contact 1 of relay 235 to the winding of relay 321 in the load control circuit of Fig. 3.

Relay 321 operates in this circuit and closes a circuit from ground on key 322 to battery through the upper winding of relay 315. Relay 315 operates in this circuit and opens the circuit of line finder group relay 303, preventing line 310 from initiating a call. Relay 315 has a plurality of contacts and as many similar relays are furnished as is necessary to prevent initiation of a call by any line in class C.

In addition, relay 315 closes a circuit from ground through lamp 314, resistance 318, winding of relay 317 to battery, lighting the lamp to indicate which class of line has been removed from service. Relay 317 operates in this circuit and closes an obvious circuit for relay 323. Relay 323 at its contact 4 lights lamp 331 and at contacts 1 and 2 closes a circuit for operating buzzer 325 to inform the local maintenance man that a portion of the lines has been removed from service. In addition, relay 323 closes a circuit from battery through the winding of relay 319, right contact of relay 321, contact 5 of relay 323, normal contact of key 328 to ground at the back contact of relay 117 in the remote control circuit. Relay 319 operates in this circuit locking over its contact 3 and contact 5 of relay 323 to ground at the contact of relay 117, independent of relay 321. At its contact 2 relay 319 closes a locking circuit for relay 315 thereby locking the class C lines out of service after the remote control circuit has been released. At contact 4, relay 319 closes a circuit for relay 116 in the remote control circuit. With relay 116 operated a circuit is closed from the code 2 ringing source over conductor 129, contact 4 of relay 116, contact 4 of relay 235, condenser 247, contact 4 of relay 105 to the tip conductor of the incoming circuit to inform the official that the class C lines have been removed from service.

The official now disconnects. He may permit the remote control circuit to restore to normal as previously described; he may reseize the remote control circuit and again dial a series of 2's to detemine the effect of the removal of the class C lines in relieving the congestion, or he may dial a series of 4's to remove the class B lines from service. The operation in either case is substantially as above described. Dialing a series of 4's results in the operation of relay 234 and relay 234 causes the operation of a relay similar to relay 321 in the class B line load control circuit 350, which in turn opens the line finder group relay circuits for the class B lines and brings about the operation of relay 118. Relay 118 closes a tone circuit from the code 1 ringing source to indicate that the class B load control circuit has functioned. Dialing a series of 2's results in the operation of relay 232 as previously described. Relay 232 in operating opens the locking circuit of relay 109 and that relay releases to reclose the operating circuit of relay 244.

When the emergency is over and it is desired to restore the class B and class C lines to service, the official will again seize the remote control circuit and dial a series of 2's in order to condition the circuit. He will then disconnect and reseize the remote control circuit, after which he will dial a series of 6's or a series of 7's in order to restore the class B or class C lines, respectively.

Dialing a series of 7's will cause the operation of relay 237 at the end of the first digit. When the series has been completed, a circuit is closed from ground at contact 7 of relay 218, brush 222, terminal 227, contact 3 of relay 109, contact 1 of relay 237 to the winding of relay 117 and battery. Relay 117 operates in this circuit and opens the locking circuit for relay 319 permitting that relay to release and in turn release relay 315 and the other similar relays associated with the class C lines.

Dialing a series of 6's results in the operation of relays 236 and 119 to restore the class B lines to service.

If the official wishes to determine whether any lines have been removed from service and which lines, if any, he may seize the remote control circuit and dial a series of 3's without first dialing a series of 2's as is necessary in order to remove lines from service or to restore them to service.

In the manner previously described, the advance of switch 210 in response to the first digit 3 brings about the operation of relay 233. With relay 233 operated, the advance of switch 220 in response to the subsequent digits places brush 222

in engagement with terminal 227, completing a circuit from ground over contact 7 of relay 218, brush 222, terminal 227, contact 1 of relay 233, winding of relay 115 and battery. Assuming that only the class C lines have been removed from service, relay 116 will be operated alone and the operation of relay 115 will close a tone circuit from the tip conductor of the incoming connection, contact 4 of relay 105, condenser 247, contact 4 of relay 233, contact 4 of relay 115, contact 2 of relay 116, contact 3 of relay 118 to conductor 129 and the code 2 ringing source. Therefore, the official will hear the 2-ring code and will be informed that the class C lines are out of service.

If only the class B lines have been removed from service so that only relay 118 has been operated, the tone circuit extends as above traced to contact 4 of relay 115 and thence over contact 3 of relay 116 and contact 2 of relay 118 to conductor 128, and the code 1 ringing generator. If no lines have been removed from service, the tone circuit extends from contact 4 of relay 115 over contact 3 of relay 116, contact 1 of relay 118, contact 5 of relay 115, to conductor 127 which extends to a source of steady ringing current.

Whenever relay 115 is operated, a circuit is closed from battery through the winding of relay 125 over contact 1 of relay 115 to conductor 126, to which ground is connected at the rate of sixty impulses per minute. If both class B and class C lines have been removed from service, the tone circuit extends from contact 4 of relay 115, contact 2 of relay 116, contact 4 of relay 118, over the front contact of relay 125 to conductor 127. Therefore, steady ringing current, interrupted at a rate of sixty interruptions per minute, is connected to the tone circuit as an indication that both the class B and class C lines have been removed from service.

The operation of relay 115 also serves to silence the alarm in the line load control circuit. Assuming that the class C lines have been removed from service so that relay 116 is operated, relay 115 in operating closes a circuit from ground over contact 2 of relay 115, contact 1 of relay 116, upper normal contact of key 328, upper winding of relay 324 to battery. Relay 324 operates in this circuit and locks over contacts of key 328, front contact of relay 324 to ground at contact 3 of relay 323. At its lower contact, relay 324 opens the circuit of buzzer 325. A similar arrangement is provided for silencing the alarm associated with the class B load control circuit 350.

To guard against the accidental selection and operation of the load control circuit, the remote control circuit is so arranged that if, after operating one of the relays 232 to 237, a different digit is dialed, no circuit is completed for relay 107 since the circuit of that relay extends over the contact of the operated relay to the terminal of brush 211 over which the relay was originally operated. Furthermore, if such a digit is dialed, when relay 104 releases, a circuit is closed for relay 105. Assuming, for example, that relay 232 had been operated and that subsequently the digit 3 was dialed, when relay 104 releases following the dialing of the digit 3, a circuit will be closed from ground, contact 1 of relay 103, back contact of relay 104, contact 1 of relay 106, brush 211 in position 3, contact 12 of relay 218, contact 6 of relay 233, to the winding of relay 105 and battery. Relay 105 at its contact 2 closes an obvious circuit for relay 108 which locks under the control of relay 113. At contact 3 relay 105 opens the operating circuit for stepping magnet 214, preventing the operation of switch 210 in response to subsequent digits and at contact 4 opens the tone circuit. Relay 105 releases when the official disconnects, releasing relays 102 and 103 to restore the remote control circuit to normal.

It is also possible to remove the lines of class C from service under local manual control by momentarily operating key 327, thereby closing a circuit for relay 321 which functions as previously described. The lines may also be restored to service manually by momentarily operating key 316 thereby releasing relay 315. A separate key, like key 316, is provided for each relay 315 so that each relay must be released separately. When all of the relays 315 have been released, relay 317 releases, in turn releasing the remainder of the load control relays.

If it should be desirable to remove lines within a class of lines from service, this may be accomplished by operating key 328. Key 328 at its outer lower alternate contacts connects relay 319 to ground at the back contact of relay 117, and at its inner lower alternate contacts connects relay 323 to a local ground. Relays 319 and 323 operate. If now relay 315 is operated by hand, relay 315 will lock to ground at contact 2 of relay 319 and remain operated. The buzzer may be silenced by operating key 326 which connects ground over the upper alternate contacts of key 328 to the lower winding of relay 324 and battery, operating relay 324.

If relay 315 is operated falsely and lamp 314 is burned out so that no alarm is sounded, relay 319 will not be operated and relay 315 closes a circuit from battery through its lower winding and lower contact, over key 316, contact 1 of relay 319 to ground through the winding of relay 320. Relay 315 will not lock in this circuit but relay 320 operates, connecting ground to the winding of relay 323, operating relay 323 to sound an alarm.

With relay 244 operated, if the official attempts to dial an additional digit, a circuit will be closed, when relay 102 falls back in response to the first interruption of the extra digit from ground over the back contact of relay 102, contact 6 of relay 113, contact 6 of relay 244 to the winding of relay 112, resistance 114 and battery. Relay 112 locks over its contact 4 to ground at contact 2 of relay 108. With relay 112 locked, a circuit is closed from battery through the winding of magnet 214 of switch 210, contact 3 of relay 105, front contact of relay 104, contact 6 of relay 244, contact 4 of relay 112 to ground at contact 2 of relay 108, thereby closing a steady circuit for magnet 214 throughout the digit and preventing its response to the dial pulses. If any extra digits are dialed after the remote control circuit has been released and reseized, relay 109 is operated and, when relay 108 operates in parallel with either relay 117, relay 119 or relay 321, the circuit for holding magnet 214 operated will extend as previously traced to the front contact of relay 104 and thence over contact 2 of relay 109, contact 3 of relay 108, contact 4 of relay 112 to ground at contact 2 of relay 108 rendering the remote control circuit independent of excess digits.

What is claimed is:

1. In a telephone system, subscribers' lines divided into groups, switching equipment, a line relay for each of said lines, means responsive to the operation of the line relay of any one of said lines for connecting said line with said switching equipment, means for disabling the respon-

sive means pertaining to all of the lines in certain of said groups of lines, a directively operable switch, and means including said switch for operating said disabling means.

2. In a telephone system, subscribers' lines divided into groups, switching equipment, a line relay for each of said lines, means responsive to the operation of the line relay of any one of said lines for connecting said line with said switching equipment, means for disconnecting said responsive means from all of the lines in certain of said groups of lines, a directively operable switch, and means including said switch for operating said disconnecting means.

3. In a telephone system, subscribers' lines divided into groups, switching equipment, means responsive to the initiation of a call on any one of said lines for connecting said line with said switching equipment, and means for directively disabling the responsive means pertaining to certain of said groups of lines comprising registering means, means for repeatedly positioning said registering means in response to the dialing of the same digit, and means responsive to a predetermined number of reoperations of said registering means to operate said disabling means.

4. In a telephone system, subscribers' lines divided into groups, switching equipment, means responsive to the initiation of a call on any one of said lines for connecting said line with said switching equipment, means for directively disabling the responsive means pertaining to certain of said groups of lines comprising registering means, means for repeatedly positioning said registering means in response to the dialing of the same digit, means responsive to a predetermined number of reoperations of said registering means to operate said disabling means, and means to prevent the operation of said disabling means if said registering means is reoperated in response to a different digit.

5. In a telephone system, subscribers' lines divided into groups, switching equipment, means responsive to the initiation of a call on any one of said lines for connecting said line with said switching equipment, means for directively disabling the responsive means pertaining to certain of said groups of lines comprising registering means, means for repeatedly positioning said registering means in response to the dialing of the same digit, means responsive to a predetermined number of reoperations of said registering means to operate said disabling means, and means operated in accordance with the value of said digit to determine the groups of lines for which the responsive means shall be disabled.

6. In a telephone system, subscribers' lines divided into groups, switching equipment, means responsive to the initiation of a call on any one of said lines for connecting said line with said switching equipment, means for directively disabling the responsive means pertaining to certain of said groups of lines comprising registering means, means for repeatedly positioning said registering means in response to the same digit, means responsive to a predetermined number of reoperations of said registering means to operate said disabling means, and means responsive to a predetermined number of operations of said registering means in response to a different digit for releasing said disabling means.

7. In a telephone system, subscribers' lines divided into groups, switching equipment, means responsive to the initiation of a call on any one of said lines for connecting said line with said switching equipment, means for directively disabling the responsive means pertaining to certain of said groups of lines comprising registering means, means for repeatedly positioning said registering means in response to the same digit, means responsive to a predetermined number of reoperations of said registering means to operate said disabling means, means responsive to a predetermined number of operations of said registering means in response to a different digit for releasing said disabling means, and means operated in accordance with the value of said other digit to determine the groups of lines for which the responsive means shall be reenabled.

8. In a telephone system, subscribers' lines divided into groups, switching equipment, connecting means responsive to the initiation of a call on any one of said lines for connecting said lines with said switching equipment, said connecting means also divided into groups, indicating means operated when each one of said groups of connecting means becomes busy, means for determining which of said groups of connecting means are busy comprising means for successively connecting with the indicating means of each of said groups of connecting means, and means responsive to connection with an operated indicating means for generating a pulse of tone.

9. In a telephone system, subscribers' lines divided into groups, switching equipment, connecting means responsive to the initiation of a call on any one of said lines for connecting said lines with said switching equipment, said connecting means also divided into groups, indicating means operated when each one of said groups of connecting means becomes busy, means for determining which of said groups of connecting means are busy comprising registering means, means for repeatedly positioning said registering means in response to the same digit, means responsive to a predetermined number of reoperations of said registering means for successively connecting with the indicating means of each of said groups of connecting means, and means responsive to connection with an operated indicating means for generating a pulse of tone.

10. In a telephone system, subscribers' lines divided into groups, switching equipment, connecting means responsive to the initiation of a call on any one of said lines for connecting said lines with said switching equipment, said connecting means also divided into groups, indicating means operated when each one of said groups of connecting means becomes busy, means for determining which of said groups of connecting means are busy comprising a control circuit, means for selecting said control circuit, registering means in said control circuit, means for repeatedly positioning said registering means in response to the same predetermined digit, means responsive to a predetermined number of reoperations of said registering means for successively connecting with the indicating means of each of said groups of connecting means, means responsive to connection with an operated indicating means for generating a pulse of tone, means responsive to the release of said control circuit for rendering said registering means responsive to other digits, and means responsive to the reselection of said control circuit and the registration of one of said other digits to disable said connecting means associated with one of said groups of lines.

11. In a telephone system, subscribers' lines divided into groups, switching equipment, connecting means responsive to the initiation of a call on any one of said lines for connecting said lines with said switching equipment, said connecting means also divided into groups, indicating means operated when each one of said groups of connecting means becomes busy, means for determining which of said groups of connecting means are busy comprising a control circuit, means for selecting said control circuit, registering means in said control circuit, means for repeatedly positioning said registering means in response to the same predetermined digit, means responsive to a predetermined number of reoperations of said registering means for successively connecting with the indicating means of each of said groups of connecting means, means responsive to connection with an operated indicating means for generating a pulse of tone, means responsive to the release of said control circuit for starting a timing operation, and means responsive to the reselection of said control circuit prior to the termination of said timing operation and the repeated registration of another digit to disable said connecting means associated with one of said group of lines.

12. In a telephone system, subscribers' lines divided into groups, switching equipment, connecting means responsive to the initiation of a call on any one of said lines for connecting said lines with said switchng equipment, said connecting means also divided into groups, indicating means operated when each one of said groups of connecting means becomes busy, means for determining which of said groups of connecting means are busy comprising a control circuit, means for selecting said control circuit, registering means in said control circuit, means for repeatedly positioning said registering means in response to the same predetermined digit, means responsive to a predetermined number of reoperations of said registering means for successively connecting with the indicating means of each of said groups of connecting means, means responsive to connection with an operated indicating means for generating a pulse of tone, means responsive to the release of said control circuit for starting a timing operation, and means effective if said control circuit is reselected prior to the termination of said timing operation to selectively disable the connecting means associated with a particular group of lines or to reenable said connecting means in accordance with the digit registered.

JOHN BAUMFALK.