United States Patent

Bruck

[15] **3,643,163**

[45] **Feb. 15, 1972**

[54] HIGH-ORDER MIXER AND COMPARATOR

[72] Inventor: **George Bruck,** Cincinnati, Ohio

[73] Assignee: **Avco Corporation,** Cincinnati, Ohio

[22] Filed: **Feb. 11, 1970**

[21] Appl. No.: **10,505**

[52] **U.S. Cl.**.....**325/177,** 325/449, 332/46, 332/52

[51] **Int. Cl.**.....**H04b 1/04,** H03d 7/02

[58] **Field of Search**.....325/17, 105, 148, 174, 177, 325/184, 187, 44.6, 449; 333/17; 332/40–42, 46, 47, 52; 323/79

[56] **References Cited**

UNITED STATES PATENTS

3,086,166	4/1963	Salvatori	323/79
3,147,440	9/1964	Benton	325/472
2,863,042	12/1958	Sanders, Jr. et al.	325/446 X
2,874,274	2/1959	Adams et al.	325/174 X
3,355,667	11/1967	Bruene	325/174
3,475,703	10/1969	Kennedy et al.	333/17
3,509,500	4/1970	McNair et al.	325/174 X

Primary Examiner—Robert L. Richardson
Attorney—Darby & Darby

[57] **ABSTRACT**

A high-order mixer uses a full-wave, odd-function, exponential (antisymmetric) nonlinearity to transfer modulation information onto a carrier or reference signal. In one form, a pair of high-order mixers are used in a balanced arrangement to effect comparison of the amplitudes of two high-frequency input signals without regard to the phase of these signals and to provide an output at the reference frequency (or a multiple) which (i) increases monotonically as the difference between the signal amplitudes increases, (ii) reverses phase as the signal amplitude difference reverses, and (iii) becomes zero when the two signal amplitudes are equal. In another example, such a comparator is used for automatic tuning.

19 Claims, 6 Drawing Figures

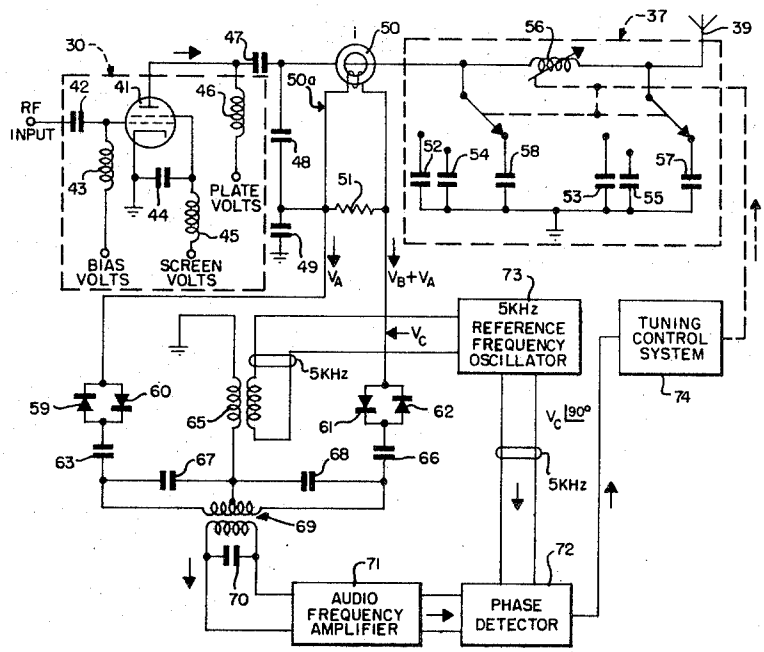

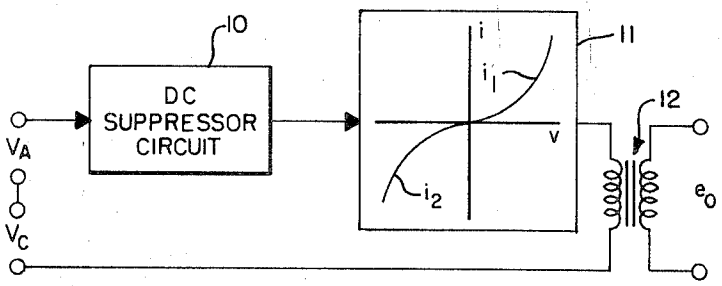

FIG. 1a

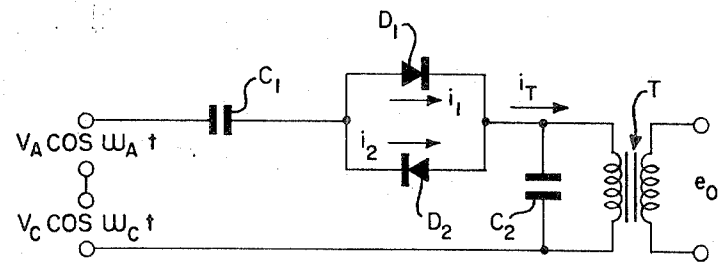

FIG. 1b

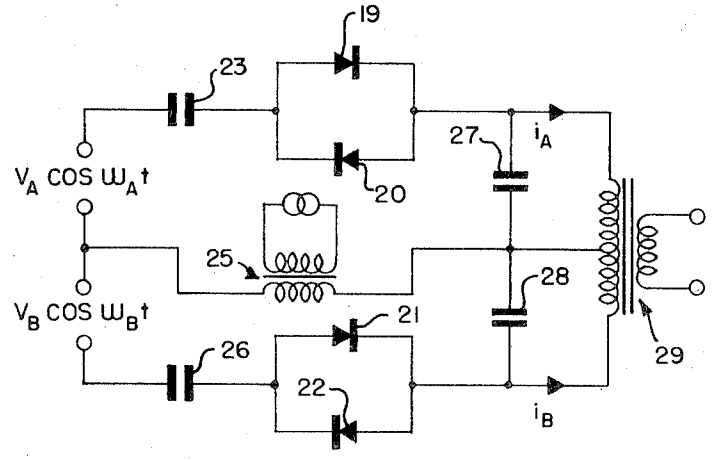

FIG. 3

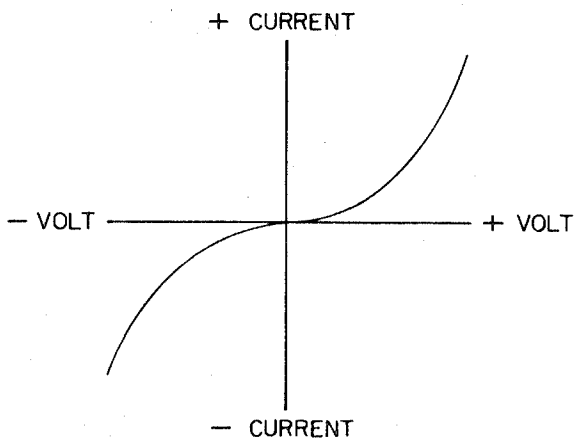

FIG. 2

INVENTOR.
GEORGE BRUCK

BY Darby & Darby

ATTORNEYS

FIG. 4

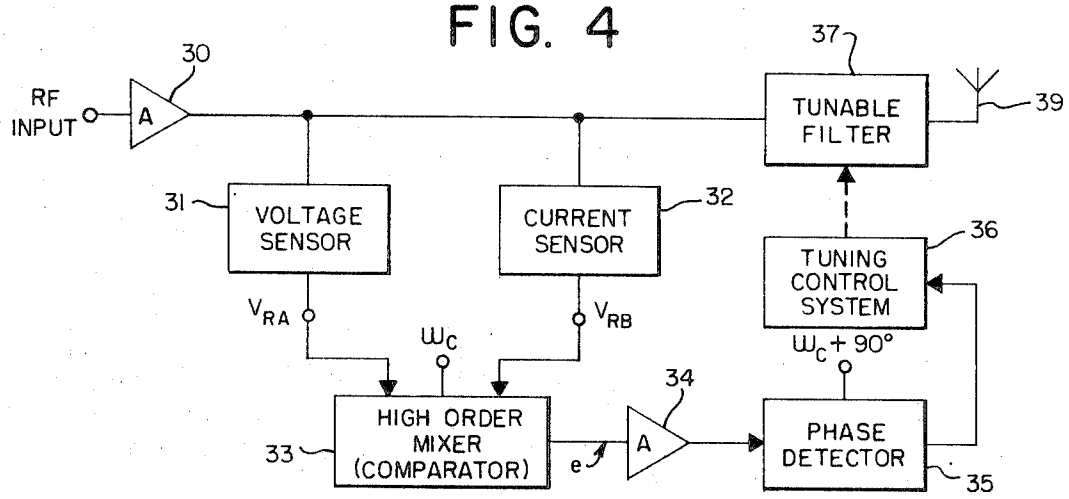

FIG. 5

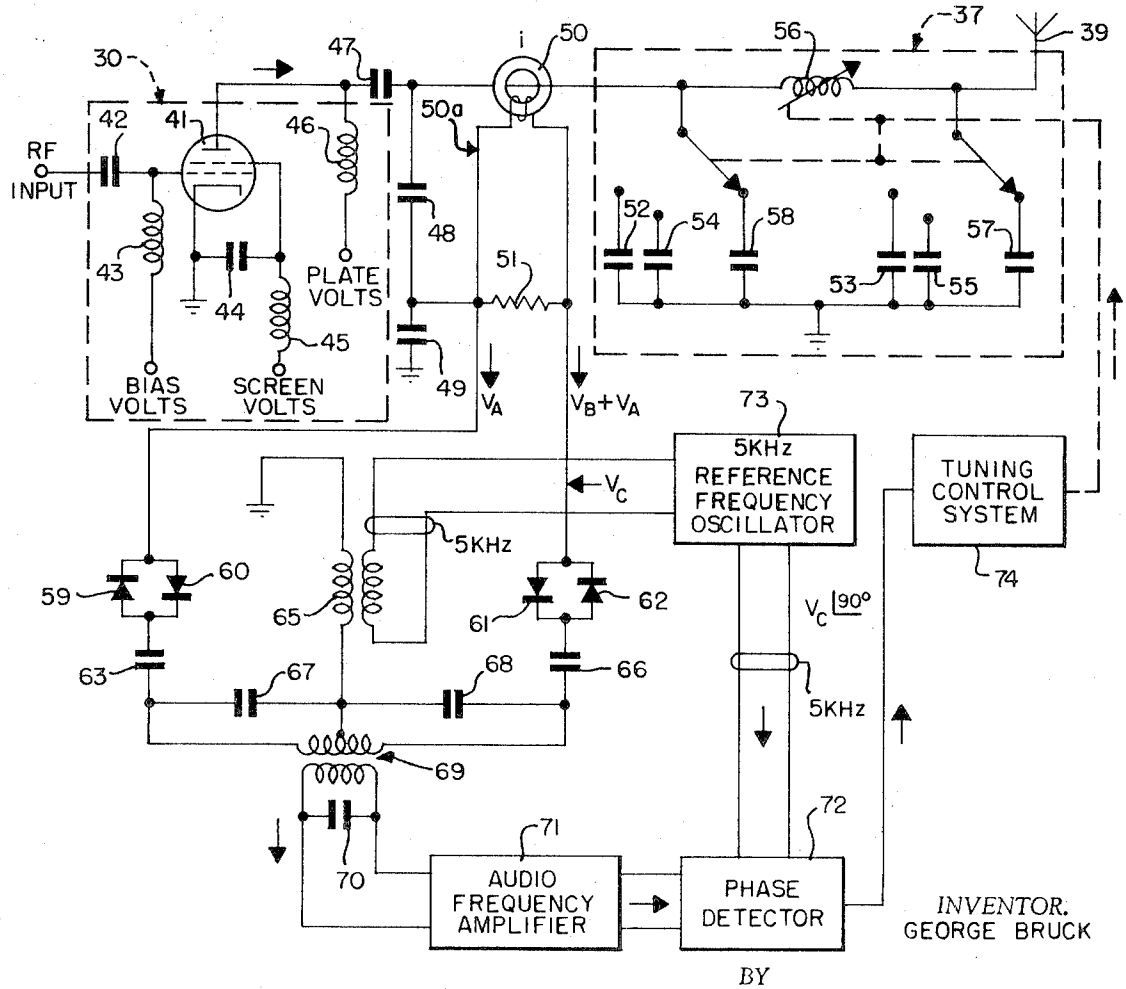

INVENTOR.
GEORGE BRUCK

BY

Darby & Darby

ATTORNEYS

HIGH-ORDER MIXER AND COMPARATOR

This invention relates to mixers and, more particularly, to circuits which use high-order nonlinear elements in mixers and signal comparators.

In a number of applications such as for the detection of impedance characteristics of circuit networks and other similar apparatus, there exists the problem of comparing two signals (of the same frequency or different frequencies) in absolute magnitude without regard to their relative phase. In one such application these are radiofrequency (RF) signals.

A simplistic approach known in the past was to rectify the two signals and compare the two outputs. This approach is not satisfactory for low-level signals because these signals cannot be properly rectified. Even for large enough input signals, drift in amplitude is still a significant problem and frequently is a limiting factor. DC amplification, while possible, generally introduces error.

One approach toward solving this dilemma is by a mixing technique. Each of the signals to be compared is mixed with a local oscillator signal. The resulting difference-frequency signals are suitably amplified in individual amplifiers, one for each signal, and the rectified outputs of these amplifiers are compared. This technique has two inherent limitations. First, the local oscillator frequency must properly track the signals being compared in order for the difference-frequency signal to be of the proper frequency. While this can be done by locking a signal proportional to the difference between the frequencies of the incoming and fixed local-oscillator signals to a second local oscillator, this is extremely complex. Second, the two difference-frequency amplifiers must have and maintain the same gain which requires significant expense and introduces difficulty in the design and manufacture of these amplifiers.

The present invention accomplishes such a precision comparison by an extremely simple circuit utilizing high-order mixer techniques.

The present invention is also directed to a high-order mixer for cross-modulating two signals, which inherently avoids the difficulty of frequency drift of either of the signals relative to the other.

It is an object of the present invention to provide a circuit for comparing the amplitudes of two signals without regard to their relative phase. This is also applicable in many cases to signals of different frequency.

It is another object of the present invention to compare two signals of the same frequency using mixer techniques and to provide an output signal which monotonically increases with increasing difference between the amplitudes of the two signals, which reverses phase if the amplitude difference reverses in polarity and which provides a null output when the two signals are identical.

It is a further object of the present invention to provide a circuit for the comparison of two signals using mixer techniques where the output signal is approximately proportional to the difference between the squares of the amplitudes of the input signals and is at a fixed frequency independent of the two signals.

It is an additional object of the present invention to provide a circuit for cross-modulating two signals regardless of frequency drift of one of the signals.

For a better understanding of the present invention, together with other and further objects thereof, reference is made to the following description taken in connection with the accompanying drawings, and the scope of the invention will be pointed out in the appended claims.

In the drawings:

FIG. 1*a* represents a schematic drawing in partially block diagram form of a high-order mixer according to the present invention;

FIG. 1*b* represents a schematic circuit diagram of the high-order mixer in more detail;

FIG. 2 is a graph showing the current versus voltage relationship of a nonlinear means used in the present invention;

FIG. 3 is a schematic circuit diagram of a signal comparator forming one aspect of the present invention;

FIG. 4 is a block diagram of a tuning control circuit using the signal comparator of FIG. 3;

FIG. 5 is a more detailed schematic circuit diagram of the arrangement of FIG. 4.

The basic circuit of the high-order mixer is shown in FIGS. 1 and 2. The signal comparator mentioned above is shown in FIG. 3. Understanding of the merits of this invention will be aided by considering the mathematical derivation of the output signal of the high-order mixer. Since the same mathematics explains the derivation of the signal comparator output of FIG. 3, the output of the mixer will be first derived and the applicability of the derivation to the signal comparator will then be shown.

The high-order mixer, shown in block form in FIG. 1*a*, is formed principally of a nonlinear means schematically represented at 11. Nonlinear means 11 preferably has a characteristic approaching that shown in FIG. 2 where the current i passing through the nonlinear means is an odd function of the voltage developed across the means. That is, $i=f(v)=-f(-v)$. The positive quadrant of the graph of FIG. 2 (where both voltage and current are positive) illustrates a monotonically increasing exponential functional relationship between v and i. The negative quadrant (where both v and i are negative) shows a monotonically decreasing exponential functional relationship between v and i. This characteristic has double-mirror symmetry (antisymmetric), about both the v-axis and the i-axis.

Two signals are supplied to the nonlinear means 11, to be mixed by it. A first signal V_A is one having a predetermined frequency, and an amplitude which varies according to predetermined data or intelligence. It may for example be a modulated carrier for conveying information or a control signal for operating suitable control circuits. The second signal V_C is a local or reference alternating signal, corresponding to an intermediate-frequency source or local oscillator. The circuit of the invention may operate to cause the local signal (or a harmonic of it) to vary in accordance with the amplitude variations of V_A.

In the illustrative form of circuit represented in FIG. 1*a*, the signals V_A and V_C are additive, with the respective input terminals to which they are applied being arranged in series with one another and the nonlinear means 11. Also shown illustratively in series is a DC suppression circuit 10 which permits only the AC component of current to flow through the nonlinear means 11. As shown below, a simple form of DC suppressor circuit is merely a series capacitor, although other circuits, including transformers and the like, may be used.

The output developed by the nonlinear means 11 is taken from its current, illustratively by an output transformer 12 whose primary is in the series circuit. Other forms of current-responsive output may be used, such as resistors, transistors or others. However, use of a transformer is convenient, since it permits a grounded connection to its secondary which is desirable.

Referring to FIG. 1*b*, one practical application of the block diagram of FIG. 1*a* is shown. Here the desired characteristic of nonlinear element 11 is achieved by the composite characteristics of a pair of oppositely polarized parallel-connected semiconductor diodes. Other nonlinear elements are also feasible, such as appropriately sloped vacuum tube diodes or properly designed thyrite elements (made of a polycrystalline carborundum structure having semiconductor properties).

The two diodes, D_1 and D_2, have associated characteristics described by the following equations:

$i_1=i_0(e^v=1)$ for positive values of v; $i_1\cong 0$

for negative values of v. (A)

$i_2=i_0(1-e^{-v})$ for negative values of v; $i_2\cong 0$

for positive values of v. (B)

where $v=qV/kI$; q is the charge of one electron, k is Boltzman's constant, and T is the absolute temperature in degrees Kelvin, making q/kt approximately equal to the value 40 at room temperature. V, in this case, is the voltage applied across the diodes, and i_0 is a reference current which depends upon the size of the diode junction.

The voltage V applied across the diodes normally exceeds ±0.5 volt because of the usually large reference voltage V_c (or is made to exceed ±0.5 volt). This causes the exponential term e^v to be much larger than 1, and the currents through the diodes then increase with voltage quite accurately according to the exponential relationship.

Then, (considering only the nonzero relationships for i, and i_2),

$$i_1=i_0(e^v) \quad (1)$$

$$i_2=i_0(-e^{-v}) \quad (2)$$

In a practical situation, the reference currents i_o of the two diodes are rarely identical. The DC blocking capacitor C_1 avoids any detrimental action in this regard and also removes any DC component of V_A. This can be shown by arbitrarily setting

$i_{10}=i_oe^{+\Delta}$ and $i_{20}=i_oe^{-\Delta}$ (3); (4) where Δ is some discrepancy factor. Then, designating the two components of the applied voltage by the subscripts AC and DC, it follows that

$$i_1=i_{10}e^{+\Delta}e^{v_{DC}}e^{v_{AC}} \quad (5)$$

$$i_2=i_{10}e^{-\Delta}e^{-v_{DC}}e^{-v_{AC}} \quad (6)$$

Since the blocking capacitor prevents DC from flowing

$$\Delta+v_{DC}=0 \quad (7)$$

Then it follows that

$$i_1=i_oe^{v_{AC}} \quad (8)$$

$$i_2=-i_oe^{-v_{AC}} \quad (9)$$

Thus the blocking capacitor C_1 eliminates DC as well as overcomes most imbalance in the diodes D_1 and D_2 to establish the desired ideal exponential relationships.

The composite current i_T through the diodes, which also flows in the external circuit by way of the transformer primary is

$$i_T=i_1+i_2=2i_0\left(\frac{e^{v_{AC}}-e^{-v_{AC}}}{2}\right) \quad (10)$$

$$=2i_0 \sin kv_{AC} \quad (11)$$

The applied voltage across the two parallel diodes is

$$VAC=VA\cos W_At+V_c\cos W_ct \quad (12)$$

Substituting (12) in (11), and recognizing that

$$v_{AC}=40V_{AC},\ v_A=40V_A \text{ and } v_c=40V_C,$$

then

$$i_T=2i_o \text{ Sinh } [40V_A \cos W_At+40V_C \cos W_ct] \quad (13)$$

Using the relationship

$$\text{Sink } (\alpha+\beta)=\text{Sinh } \alpha \text{ Cosh } \beta+\text{Cosh } \alpha \text{ Sinh } \beta \quad (14)$$

we get

$$i_T=2i_o]\text{Sinh}(v_A \cos W_At)\cosh(v_C \cos W_ct)+\text{Sinh}(v_C \cos W_ct)\cosh(v_A \cos W_At)] \quad (15)$$

Equation (15) has terms of the general nature of sinh ($v\cos Wt$) and cosh ($v\cos Wt$). These terms will now be expanded in terms of the modified Bessel function $I_M(v)$.

Using the relationship

$$\text{Sinh}\alpha=(e^{\alpha}-e^{-\alpha}) \quad (16)$$

and substituting $Z\cos\theta$ for α

one gets

$$\text{Sinh } (Z\cos\theta)=\tfrac{1}{2}(e^{Z\cos\theta}-e^{-Z\cos\theta}) \quad (17)$$

Expanding the exponential terms of (17) by using equation 9.6.34 on page 376 of the "Handbook of Mathematical Functions," edited by Abramowitz and Stegun and published as Applied Mathematics Series 55 by the National Bureau of Standards, 7th printing, May 1968, and letting $Z=v$ and $O=Wt$ one obtains

$$\text{Sin } k(v\cos\omega t)=\frac{1}{2}[I_0(v)+2I_1(v)\cos\omega t+2I_2(v)\cos 2\omega t+\ldots -I_0(v)+2I_1(v)\cos\omega t-2I_2(v)\cos 2\omega t+\ldots] \quad (18)$$

$$-2[I_1(v)\cos\omega t+I_3(v)\cos 3\omega t+I_5(v)\cos 5\omega t+\ldots] \quad (19)$$

Similarly, by using the relationship

$$\text{Cosh } \alpha=\tfrac{1}{2}(e^{+}+e^{-}) \quad (20)$$

and substituting $\alpha=Z\cos\theta$ one obtains

$$\text{Cosh } (Z\cos\theta)=\tfrac{1}{2}(e^{Z\cos\theta}+e^{-Z\cos\theta}) \quad (21)$$

Expanding again by using equation 9.6.34 of Abramowitz and Stegun there results

$$\text{Cosh } (v\cos Wt)=I_o(v)+Z[I_2(v)\cos 2Wt+I_4(v)\cos 4Wt+\ldots \quad (22)$$

Substituting these expansions of sinh and cosh in i_t in equation (15)

one obtains

$$i_T=2i_0[2\{I_1(\nu_A)\cos\omega_At+I_3(\nu_A)\cos 3\omega_At+\ldots\}\{I_0(\nu_C)+2I_2(\nu_C)\cos 2\omega_Ct+\ldots\}+2\{I_1(\nu_C)\cos\omega_Ct+I_3(\nu_C)\cos 3\omega_Ct+\ldots\}\{I_0(\nu_A)+2I_2(\nu_A)\cos 2\omega_A \quad (23)$$

The frequency of interest in this case is the local frequency W_c since the basic function of the high-order mixer is to transfer the modulation or amplitude variations V_A on the input signal onto the reference signal.

Rewriting only the terms involving $\cos W_ct$ (since other frequency components are to be eliminated) we get

$$i_T=2i_0[2I_1(v)\cos W_ct][I_0(v_A)] \quad (24)$$

$$=4i_0[I_1(v_c)][I_0(v_A)]\cos W_ct \quad (25)$$

At room temperatures (where $v_c=40V_c$) this may be written

$$i_T=4i_0[I_1(40V_c)][I_0(40V_A)]\cos W_ct \quad (26)$$

For V_A small (say 0.05 volts) the $I_0(V_A)$ term may be expanded as shown in equation 9.6.12 of Abramowitz and Stegun as follows:

$$I_0(\nu_A)=1+\frac{\nu_A^2}{4}+\frac{\nu_A^4}{64}+\frac{\nu_A^6}{2304}+\ldots \quad (27)$$

The $I_1(v_c)$ term cannot be simply approximated since V_c is greater than 0.5 volts and the series development has to be carried too far. As this is only a multiplying factor, it can be lumped together with i_o into a fixed value for a fixed applied V_C.

If V_a is small enough, the expansion of $I_0(V_A)$ may be truncated after the second term. One then obtains the following approximation of the total output current:

$$i_T=4i_0I_1(40\nu_C)\left[1+\frac{(40\nu_A)^2}{4}\right]\cos\omega_Ct \quad (28)$$

or

$$i_T=kf(V_c)[i+4_{00}V_A^2]\cos W_ct \quad (29)$$

where K is a constant and $f(V_c)$ means a function of V_c, which is constant.

This is the result of the analysis.

Thus, the amplitude of the input signal, including any modulation thereon, has been transferred onto the local signal according to the relationship (29). In effect, the local signal W_c is amplitude modulated by the square of the input voltage modulation V_A.

For best results a filter capacitor C_2 should be placed across the output transformer T to eliminate higher harmonics of W_c. Where W_A is larger than W_c, this will also eliminate other unwanted frequency components. In addition, the source resistances and impedances of all capacitors should be kept small to preserve the above relationships.

Since any internal diode resistance will cause the diode characteristic to deviate from the desired exponential relationship, such resistance should also be kept to a minimum. Schottky diodes are designed for low noise applications so that their internal resistances are substantially lower than for the ordinary diode. Such diodes are therefore particularly suitable for use as the nonlinear means of the present invention.

Referring now to FIG. 3, an important embodiment of the

high-order mixer is shown, which is in the nature of an amplitude-comparison circuit. In a comparator circuit, the absolute amplitude of each signal being compared is not material, and it is sufficient to provide a resultant output which merely monotonically increases with the increasing difference between the amplitudes of the two signals, reverses phase if the difference in amplitudes reverses in polarity, and properly nulls if the two signals are equal in amplitude. Such a result is derived from a signal proportional to the algebraic difference between the squares of the two signals to be compared, which is the output of the FIG. 3 circuit.

An examination of the circuit of FIG. 3, will show that this circuit is no more than two high-order mixers of FIG. 1*b*, each having a separate input signal, with a common local signal as reference $V_A \cos W_A t$ and $v_B \cos W_B t$ are the two signals to be compared in amplitude without regard to their phase or frequency. The V_A input is connected to a series circuit including a blocking capacitor **23** and a nonlinear means having an odd-function, exponential characteristic shown as diodes **19** and **20**. The V_B signal is connected to the other series circuit including the blocking capacitor **26** and nonlinear means comprising diodes **21** and **22**. The two series circuits are connected to the outer terminals of a center-tapped output transformer **29**. Across the half windings of the transformer primary are filter capacitors **27** and **28**. A local signal source is placed effectively in series in each series circuit by transformer **25**.

Using Equation (25) for i_t derived previously for the single mixer case, the following oppositely directed currents are produced at the circuit output due to the action of each side:

$$i_A = 4i_{oA}[I_1(v_c)][I_o(v_A)]\cos W_c t \quad (28)$$

$$i_B = 4i_{oB}[I_1(v_c)][I_o(v_B)]\cos W_c t \quad (29)$$

where the subscripts A and B are designations for the respective sides of the circuit.

The net output current in the secondary of transformer **29** is proportional to

$$i_A - i_B = 4I_1(4_o V_c)[i_{oA} I_o(4_o V_A) - i_{oB} I_o(4_o V_B)]\cos W_c t \quad (30)$$

The circuit can be prebalanced with zero input signal, which is equivalent to setting $i_{oA} = i_{oB} = i_o$

The resulting output current i_R is then

$$i_R = 4i_o I_1(4_o V_c)[I_o(4_o V_A) - I_o(4_o V_B)]\cos W_c t \quad (31)$$

Using the same expansion for I_o as previously (equation **27**) and truncating the expansion after the second term, the following approximation for the output is valid:

$$i_R = 4i_o\,[I_1(40v_C)]\left[\left(1+\frac{(40v_A)^2}{4}\right)-\left(1+\frac{(40v_B)^2}{4}\right)\right]\cos\omega_C t \quad (32)$$

$$= 4i_o\,[I_1(40v_C)]\;(400)\;[v_A^2 - v_B^2]\;\cos\omega_C t \quad (33)$$

$$= Kf(v_C)\;[v_A^2 - v_B^2]\;\cos\omega_C t \quad (34)$$

where K is a constant and $f(V_c)$ denotes a function of V_c, which is kept fixed.

This output then is the desired signal, since it is of fixed frequency (that of the local source W_c) and proportional to the difference between the amplitudes of the applied input signals (squared), will reverse phase when the difference between the input amplitudes reverses in polarity, and will be zero when those amplitudes are equal.

Such a signal is particularly applicable as an error or command signal in a closed loop control system as will be described with regard to the system shown in FIGS. **4** and **5**.

Referring to FIGS. **4** and **5**, a practical application of the comparison circuit shown in FIG. **3** is shown. These figures depict circuitry useful in the automatic tuning or frequency control of a radiofrequency tuning circuit such as might be used in a radio transmitter. A similar environment in which this invention is useful is in automatic tuning apparatus such as for tuning the output of a power amplifier to a resonant and matched condition with an antenna system by the use of a resonant circuit such as a pi-type filter network similar to that shown in FIG. **5**.

FIG. **4** illustrates a block diagram of a portion of the automatic tuning system. A radiofrequency input signal (such as derived from an oscillator or modulator) is supplied to an amplifier **30** whose output provides a voltage sample and a current sample by operation of voltage sensor **31** and current sensor **32**, respectively. The amplifier output is also coupled to a tunable filter network **37** whose output is fed to an antenna **39**. The filter **37** is adjustable under the control of tuning control system **36** which in turn is controlled so that the antenna **39** will become tuned and matched to the source resistance presented by amplifier **30**. The amplitude and phase relationships of the current and voltage samples are used to establish the matched and tuned condition of filter **37**.

In one approach to tuning and matching a filter, it is desired that the amplitude of the vectorial sum of the voltage sample and the current sample be compared with the amplitude of the voltage sample alone. When these two values are made equal by operation of the system shown in FIG. **4**, one requirement in achieving a tuned and matched condition of filter **37** is met.

The voltage sample V_{RA} and a voltage proportional to the sum of the current sample V_{RB} and the voltage sample V_{RA} form the inputs to the comparator **33**, which incorporates the high-order mixer described above. The output of the comparator is designed to be at null when the input signals to the comparator are equal in amplitude. When these input signals are not equal, indicating that the filter has not been properly adjusted, an error signal, *e*, is produced at the output of the comparator. This signal is amplified by an amplifier **34** and detected by phase detector **35** to produce a DC error signal. This resultant signal is used by the tuning control system **36** to adjust filter coils or capacitors in the filter network to bring the filter into a resonant and matched condition.

Referring now to FIG. **5**, a more detailed circuit is shown which may, for example, form the final amplifier section of a radio transmitter. An RF input signal, which may be from an exciter, is applied to the control grid of a conventional amplifier tube **41** to a coupling capacitor **42**. Bias, screen, and plate voltages are supplied to the tube **41** by means of respective RF chokes **43**, **45** and **46**. The output from amplifier tube **41** is supplied to a coupling capacitor **47** and a coupling coil **50** to the tunable filter network **37** shown as consisting of a variable inductance **56** and selectable capacitor sets **52**, **54**, **58** and **53**, **55**, **57**. The RF output of the filter network **37** may be used to drive the antenna **39** or an antenna coupler stage or other utilization circuit. It is desirable that the filter network **37** be kept tuned to the RF signal input to it and this is accomplished by automatically varying inductor coil **56** and capacitors **52**, **54**, **58** and **53**, **55**, **57** through the use of the tuning control system **36** as described below. While a pi-type filter is shown as output filter **37** this discussion applies to any similar tuned network which may be used in this particular application. Narrow band networks from simple LC (L standing for inductance and C capacitance) to tee or pi networks discussed here are suitable in connection with the present invention.

The voltage sample for the high order comparator is derived from the output of amplifier **41** at the junction of a pair of capacitors **48** and **49** connected in series across the amplifier output. The current sample is taken from a coupling coil **50** which illustratively may be a ferrite ring surrounding the wire feeding RF energy to the pi network **37**. The ferrite ring has a secondary winding **50***a* across which is connected a resistor **51**. The current sample then is the voltage appearing across the resistor **51** which is proportional to the current flowing

into the filter network **37**. Other suitable means for sensing current may be used and will readily suggest themselves to those skilled in the art.

The voltage sample corresponds to the signal V_A described earlier in connection with FIG. **3**. The sum of the current sample and voltage sample corresponds to signal V_B described earlier. These signals are supplied to a comparator corresponding to FIG. **3**.

The voltage sample, V_A, is impressed across a series circuit formed by a pair of parallel, relatively reversed diodes **59**, **60**, a capacitor **63**, a bypassed half of the center-tapped primary of an output transformer **69** and the secondary of transformer **65**. As in FIG. **3**, the input voltage, V_A, is in series with a reference voltage V_C supplied from transformer **65** which is coupled to the output of a reference oscillator **73**.

Similarly, the sum of the voltage and current samples, V_B, is impressed across a series circuit formed by another pair of parallel, relatively reversed diodes **61**, **62**, a capacitor **66**, the other similarly bypassed half of the center-tapped primary of output transformer **69**, and the transformer **65** secondary. This places the other input voltages V_B also in series with the reference voltage V_C as in FIG. **3**.

The reference frequency is selected preferably in the audiofrequency range (illustratively 5 kilohertz), while the RF samples are in the megahertz range as is conventional. This again proves to be of definite advantage in that the output signal appearing at the transformer **69** secondary is in the audiofrequency range, making it simple by the use of bypassed capacitors **67**, **68**, to greatly attenuate modulation products at radiofrequency. Note how this differs markedly from the typical modulator whose output is a carrier plus certain sidebands.

In operation, the two RF signals related to the voltage and current applied to the tunable filter **37** are fed to the high-order comparator. As stated previously, a sample of the RF voltage V_A is supplied to one input of the comparator and the sum of the RF voltage and current samples, V_B, is applied to the other input. The voltage and current samples are designed or adjusted (by any conventional means) so that V_A equals V_B when the system is at null. This can readily be done by substituting a test resistor for the network while making voltages V_A and V_B equal. One way of achieving this condition is to establish a selected voltage sample level for V_A using capacitors **48** and **49** and then selecting resistor **51** to provide the desired voltage proportional to the current sample.

As is well known, when a filter is made to change its tuning condition, there is a relative phase shift between voltage and current which results in a marked change in amplitude of one relative to the other. This change is reflected in the inputs V_A and V_B. This change is used in the comparator circuit to obtain a control signal for readjusting the filter to the desired condition of resonance.

As described above, the output of the comparator circuit will be a signal at the reference frequency W_c which will have null amplitude when voltages V_A and V_B are of equal amplitude. That output signal will reverse in polarity (i.e., phase sense) according as V_A exceeds or is less than V_B, and will vary in amplitude in correspondence with the magnitude difference between V_A and V_B. That output (bypassed for higher harmonics by capacitor **70**) is supplied to an audio amplifier **71** of any conventional form, which serves further to suppress any RF components. The amplified output of audio amplifier **71** is supplied as an input signal to a phase detector **72**, which may be a synchronous detector of any conventional form. Detector **72** is also supplied with a local signal from reference oscillator **73**, phase shifted 90° with respect to the reference of V_C supplied to the comparator circuit.

When the RF signals are in proper relationship, that is, when the amplitude of the vectorial sum of the current and voltage samples V_B equals the amplitude of the voltage sample V_A alone, the output of phase detector **72** is at a null condition. When the two signals V_A and V_B are unequal, the relative magnitudes of the voltage and current samples will differ producing an error signal of the same frequency as the carrier at the input of detector **72**. Detector **72** then converts this alternating error signal into a positive or negative DC error signal of a polarity depending on whether the voltage sample V_A was greater or less than V_B, and of an amplitude corresponding to the difference in amplitude between V_A and V_B. This error voltage is then employed by the tuning control system **74** in a conventional way to adjust the value of appropriate elements (L or C) of filter **37** to bring the pi network into a state leading to a tuned and matched condition. Illustrative means for accomplishing the tuning of filter **37** have been described in the previously mentioned patent to Beitman U.S. Pat. No. 3,390,337.

The circuit contains almost no critical components. The resistor **51** is not critical. The main criterion is to have the reactance of coil **50** much greater than the resistance of resistor **51**. The size of capacitors **48** and **49** will depend on the voltage level associated with the amplifier stage. For many tetrode amplifiers, the B+ voltage supply may exceed 1,000 volts and the peak voltage at the high side of capacitor **48** is almost double the B+ voltage. In that case, capacitor **49** is approximately three orders of magnitude larger than capacitor **48** to achieve a voltage sample at the junction of capacitors **48** and **49** on the order of 1 volt. If the amplifier stage incorporated a transistor as the active element, the peak voltage at the high side of capacitor **48** is desirably much lower and the size ratio of the capacitors may be in the order of fifty to one. As can be readily understood by those skilled in the art, a circuit using comparator **33** may be similarly configured to establish phase information necessary to provide the final tuned and matched condition required for filter **37**. When the filter is both tuned and matched a condition of maximum power transfer is achieved and the RF voltage will be in phase with the applied RF current. Such a circuit arrangement has many diverse applications which need not be further discussed here.

As will be obvious to those skilled in the art, the comparator described above has many applications. The comparison of two AC signals of the same or different frequencies and of very low signal levels can be made with high accuracy. In fact most applications warranting conversion of AC signals to DC signals and subsequent comparison of the DC signals can be effected by the high-order comparator of the present invention. Such a circuit may be required in diverse control systems and high-frequency communications systems among other uses.

The use of one high-order comparator to compare signal amplitude information and another to compare phase information can provide information with regard to impedance parameters which may be applicable to innumerable tuning and impedance adjusting or impedance measuring circuits.

While there has been described what are at present considered to be the preferred embodiments of the invention, it will be obvious to those skilled in the art that various changes and modifications may be made therein and it is therefore intended to cover all such changes and modifications as fall within the true spirit and scope of the invention.

What is claimed is:

1. A mixer circuit for transforming amplitude variations of a first signal of a predetermined first frequency into corresponding amplitude variations of a second signal of a different frequency comprising:

nonlinear means for producing an output signal which is an odd, substantially exponential function of its input signal;

means supplying only the AC portion of said first signal to said nonlinear means as an input signal thereto;

means also supplying a second signal of a frequency different from said first frequency to said nonlinear means as an input signal thereto; and

means for deriving an output from only those components of said nonlinear means output signal which are substantially of a multiple including unity of said second signal frequency.

2. A circuit as described in claim 1 including means for supplying the sum of the AC portions of said first and second signals to said nonlinear means as an input signal.

3. A circuit as described in claim 1 wherein the frequency of said second signal is substantially lower than said first signal frequency.

4. A circuit as described in claim 1 wherein said nonlinear means comprises a pair of parallel-connected, oppositely polarized diodes whose total current is substantially an odd, exponential function of the voltage applied across said diodes.

5. A circuit as described in claim 1 wherein said multiple of said second signal frequency is approximately proportional to 1 plus 400 times the square of the amplitude of said first signal frequency.

6. A circuit as described in claim 1 wherein said means supplying only the AC portion of said first signal to said nonlinear means comprises a blocking capacitor.

7. A comparison circuit for producing a variable-amplitude alternating output signal corresponding to the difference between the amplitudes of two variable-amplitude alternating input signals comprising:

first and second nonlinear means, each for producing an output signal which is an odd, substantially exponential function of its input signal;

means for supplying to said first nonlinear means an input signal which substantially corresponds to the sum of an alternating reference signal and one of said variable-amplitude alternating input signals, to produce a first output signal;

means for supplying to said second nonlinear means an input signal which substantially corresponds to the sum of said reference signal and the other of said variable-amplitude alternating input signals to produce a second output signal; and

means for deriving a resultant output signal corresponding to the algebraic difference between said variable-amplitude alternating input signals.

8. A circuit as described in claim 7 wherein said first and second nonlinear means each comprise a pair of parallel-connected, oppositely polarized diodes whose total current is substantially an odd, exponential function of the voltage applied across said diodes.

9. A circuit as described in claim 7 wherein said supplying means each include a series capacitor for blocking DC signals.

10. A circuit as described in claim 7 wherein said deriving means includes means for suppressing signal components in said resultant output signal substantially of the frequency of each of said two variable-amplitude input signals.

11. A circuit as described in claim 7 wherein said two variable-amplitude alternating input signals are at a substantially higher frequency than said variable-amplitude alternating output signal.

12. A circuit as described in claim 7 wherein said means for deriving an output signal includes a transformer having a primary winding connected in series at one end to said first nonlinear means and connected in series at the other end to said second nonlinear means.

13. A circuit as described in claim 12 wherein said primary winding has a center-tap and wherein said reference signal is supplied to said center-tap.

14. A circuit as described in claim 7 wherein said resultant output signal is substantially of a multiple including unity of the reference signal.

15. In an automatic tuning system having a tunable circuit and a first signal corresponding to the voltage applied to said tunable circuit and a second signal related to the current flow to said tunable circuit, an amplitude comparison circuit adapted to have said first and second signals and a reference signal of a different frequency supplied thereto comprising:

first and second nonlinear means, each for producing an output which is an odd, substantially exponential function of input signal;

means for supplying to said first nonlinear means an input signal which substantially corresponds to the sum of said first signal and said reference signal to produce a first output signal;

means for supplying to said second nonlinear means an input signal which substantially corresponds to the sum of said second signal and said reference signal to produce a second output signal; and

means for deriving a resultant output signal corresponding to the algebraic difference between said first and second signals;

whereby said resulting output signal may be used to tune said tunable circuit.

16. A circuit as described in claim 15 whereby said first and second nonlinear means each comprises a pair of parallel-connected, oppositely polarized diodes whose total current is substantially an odd, exponential function of the voltage applied across said diodes.

17. A circuit as described in claim 15 wherein said means for deriving a resultant output signal includes an output transformer and a detector for producing a DC error signal.

18. A circuit as described in claim 15 wherein said supplying means each include a series capacitor for blocking DC signals.

19. In an automatic tuning system having a tunable circuit and a first signal corresponding to the voltage applied to said tunable circuit and a second signal related to the current flow to said tunable circuit, amplitude comparison circuit adapted to have said first and second signals and a reference signal of a different frequency supplied thereto comprising:

a first and second series capacitor each responsive to said first and second signals respectively for blocking DC signals;

a first pair of oppositely polarized, parallel-connected diodes connected in series with said first capacitor and responsive to the AC portion of said first input signal and to said reference signal for providing a first output signal which is an odd, substantially exponential function of the voltage developed across said first pair of diodes;

a second pair of oppositely polarized, parallel-connected diodes connected in series with the second blocking capacitor and responsive to the AC portion of said second input signal and to said reference signal for providing a second output signal which is an odd, substantially exponential function of the voltage developed across said second pair of diodes;

a center-tapped output transformer, having the series circuit formed by said first blocking capacitor and first diode pair connected to one outer terminal and the series circuit formed by said second blocking capacitor and second diode pair connected to the other outer terminal and having the reference signal applied to said center-tapped terminal, said transformer being responsive to said first and second current for developing an output voltage of the frequency of the reference signal with an amplitude corresponding to the algebraic difference between the squares of the individual first and second signals;

a pair of capacitors each connected across one half of the primary of the output transformer for filtering undesired signals and means responsive to said output voltage for detecting said voltage using said reference signal to produce a DC error signal whereby said DC signal may be used to tune said tunable circuit.

* * * * *