(12) INTERNATIONAL APPLICATION PUBLISHED UNDER THE PATENT COOPERATION TREATY (PCT)

(19) World Intellectual Property Organization
International Bureau

(43) International Publication Date
26 August 2021 (26.08.2021)

WIPO | PCT

(10) International Publication Number
WO 2021/163754 A1

(51) International Patent Classification:
B62D 33/027 (2006.01) *B60P 1/28* (2006.01)
B60P 1/52 (2006.01) *B60P 1/64* (2006.01)

(21) International Application Number:
PCT/AU2021/050131

(22) International Filing Date:
16 February 2021 (16.02.2021)

(25) Filing Language: English

(26) Publication Language: English

(30) Priority Data:
2020900456 18 February 2020 (18.02.2020) AU

(71) Applicant: **JAGANO PTY LTD** [AU/AU]; 37b McCallum Lane, Victoria Park, Western Australia 6100 (AU).

(72) Inventors: **ALLEN, Gavin John**; 37b McCallum Lane, Victoria Park, Western Australia 6100 (AU). **KHOURY, Edward Joseph**; 19 Scouler Way, Bateman, Western Australia 6150 (AU). **KHOURY, Ross Stanley**; 19 Scouler Way, Bateman, Western Australia 6150 (AU).

(74) Agent: **ARMOUR IP PTY LTD**; PO Box 3099, Broadway Nedlands, Western Australia 6009 (AU).

(81) Designated States *(unless otherwise indicated, for every kind of national protection available)*: AE, AG, AL, AM, AO, AT, AU, AZ, BA, BB, BG, BH, BN, BR, BW, BY, BZ, CA, CH, CL, CN, CO, CR, CU, CZ, DE, DJ, DK, DM, DO, DZ, EC, EE, EG, ES, FI, GB, GD, GE, GH, GM, GT, HN, HR, HU, ID, IL, IN, IR, IS, IT, JO, JP, KE, KG, KH, KN, KP, KR, KW, KZ, LA, LC, LK, LR, LS, LU, LY, MA, MD, ME, MG, MK, MN, MW, MX, MY, MZ, NA, NG, NI, NO, NZ, OM, PA, PE, PG, PH, PL, PT, QA, RO, RS, RU, RW, SA, SC, SD, SE, SG, SK, SL, ST, SV, SY, TH, TJ, TM, TN, TR, TT, TZ, UA, UG, US, UZ, VC, VN, WS, ZA, ZM, ZW.

(84) Designated States *(unless otherwise indicated, for every kind of regional protection available)*: ARIPO (BW, GH, GM, KE, LR, LS, MW, MZ, NA, RW, SD, SL, ST, SZ, TZ,

(54) Title: BUCKET SYSTEM FOR A VEHICLE TRAY

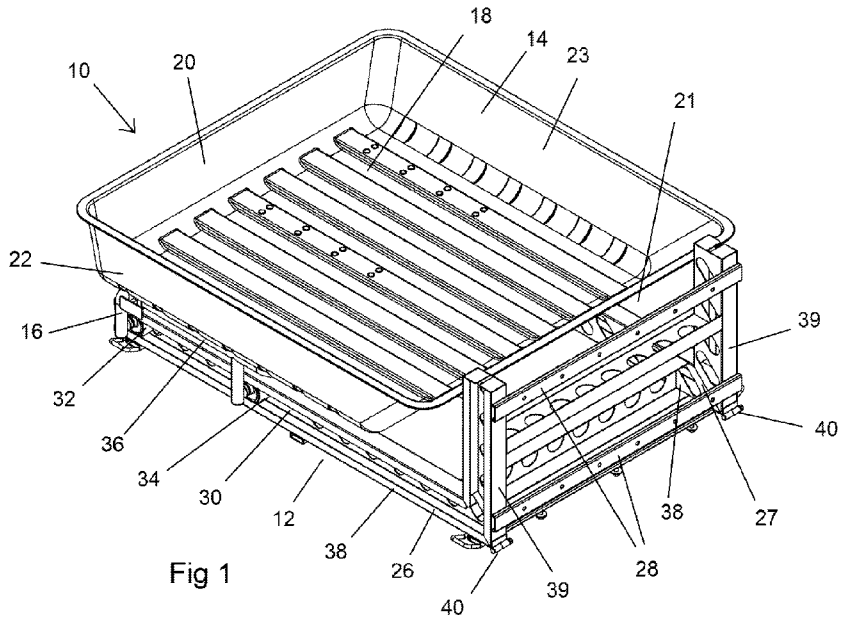

Fig 1

(57) Abstract: A bucket system (10) comprising a frame (12) including first and second rails (26, 27). A bucket (14) is provided having a bucket support (16) including front wheels (32, 33) and rear wheels (34, 35) being slidable within channels (30) in the first and second rails (26, 27). Rear portions (39) of the rails (26, 27) are pivotable between extended and stored positions. When the rear portions (39) are moved to the extended positions, gaps (42) are defined in upper sides of each of the rails (26, 27) such when the rear wheels (34, 35) are moved into the rear portions (39) of the first and second rails (26, 27), the front wheels (32, 33) may move upwardly through the gaps (42) to allow the bucket (14) to pivot about the rear wheels (34, 35).

WO 2021/163754 A1

[Continued on next page]

UG, ZM, ZW), Eurasian (AM, AZ, BY, KG, KZ, RU, TJ, TM), European (AL, AT, BE, BG, CH, CY, CZ, DE, DK, EE, ES, FI, FR, GB, GR, HR, HU, IE, IS, IT, LT, LU, LV, MC, MK, MT, NL, NO, PL, PT, RO, RS, SE, SI, SK, SM, TR), OAPI (BF, BJ, CF, CG, CI, CM, GA, GN, GQ, GW, KM, ML, MR, NE, SN, TD, TG).

Published:

— *with international search report (Art. 21(3))*

"BUCKET SYSTEM FOR A VEHICLE TRAY"

Field of the Invention

[001] The present invention relates to a bucket system for use within the tray of a vehicle.

Background to the Invention

[002] Vehicles having rear trays are used for transporting a wide variety of loads. While larger commercial versions of such vehicles may include the option of a tray which can be mechanically tipped, many smaller commercial and personal vehicles include only a fixed tray. When transporting material such as sand or soil, it is therefore generally necessary to shovel the material out of the tray.

[003] The present invention relates to a bucket system which may be used within the tray of such vehicles. The bucket system is provided in a form which is easy to use and fit to existing vehicles and which is of relatively simple and inexpensive construction. The bucket system provides for easy movement of the bucket to a position where it is clear from the vehicle so that it may be easily tipped.

Summary of the Invention

[004] According to one aspect of the present invention there is provided a bucket system comprising:

a frame including first and second rails, the first and second rails each including a front portion and a rear portion, the front portions being secured relative to a floor of a tray of a vehicle and the rear portions being pivotable between an extended position, in which the rear portions are parallel to the front portions, and a stored position, in which the rear portions are perpendicular to the front portions; and

a bucket having a bucket support, the bucket support including first and second front wheels and first and second rear wheels, the first front and rear wheels being slidable within a channel extending along the first rail and the second front and rear wheels being slidable within a channel extending along the second rail;
wherein when the rear portions of the first and second rails are moved to the extended positions, a gap is defined in an upper side of each of the first and second channels such when the first and second rear wheels are moved into the first and second channels in the rear portions of the first and second rails, the first and second front wheels may move upwardly through the gaps to allow the bucket to pivot about the first and second rear wheels.

[005] Preferably rear ends of the front portions and front ends of the rear portions of the first and second rails are angled such that the front ends of the rear portions engage with the rear ends of the front portions when the rear portions are in the stored position and define the gaps in the extended position.

[006] Preferably the rear ends of front portions and front ends of the rear portions are angled at 45° such that the front ends of the rear portions engage with the rear ends of the front portions when the rear portions are in the stored position.

[007] Preferably the front and rear portions of the side rails are connected together by hinges on lower sides thereof.

[008] Preferably the first and second rails comprises C-shaped members such that the channels are provided in vertical sides of the first and second rails and upper and lower sides of the channels are closed such that the wheels may engage against inner surfaces of the upper and lower sides of the channels.

[009] In a preferred embodiment, the channels are provided in outer sides of the first and second rails.

[010] Preferably the channels in the first and second rails are closed at the rear ends.

[011] Preferably the centre of gravity of the bucket is located rearwardly of the centre of the bucket support such that the bucket tends to tip rearwardly when the front wheels are located adjacent the gap.

[012] Preferably the bucket comprises a base wall and an edge wall extending upwardly from around the periphery of the base wall.

[013] Preferably the base wall is rectangular in shape and the edge wall comprises front and rear walls and first and second side walls.

[014] In a preferred embodiment, the first and second side walls and the front wall are perpendicular to the base wall and the rear wall is angled outwardly away from the base.

[015] Preferably the bucket support includes a first side member located adjacent the first side wall and a second side member located adjacent the second side wall, the first side member including the first front and rear wheels and the second side member including the second front and rear wheels.

[016] Preferably of the first and second side members includes downturned end portions on which the wheels are mounted.

[017] Preferably the first and second side members are mounted generally between midpoints of the first and second side walls and the front wall.

[018] Preferably resilient buffers are provided on the bucket support adjacent a rear side thereof such that the buffers engage with an edge of a tray door of the vehicle when the bucket is tipped to restrict further rotation of the bucket

Brief Description of the Drawings

[019] The invention will now be described, by way of example, with reference to the following drawings, in which:

[020] Figure 1 is an upper perspective view of a bucket system in accordance with the present invention;

[021] Figure 2 is a lower perspective view of the bucket system of Figure 1;

[022] Figure 3 is a side view of the bucket system of Figure 1;

[023] Figure 4 is a top view of the bucket system of Figure 1;

[024] Figure 5 is a front view of the bucket system of Figure 1;

[025] Figure 6 is a rear view of the bucket system of Figure 1;

[026] Figure 7 is a bottom view of the bucket system of Figure 1;

[027] Figure 8 is an upper perspective view of the bucket system with the rear portions of the first and second rails in the extended position;

[028] Figure 9 is a lower perspective view of the bucket system with the rear portions of the first and second rails in the extended position;

[029] Figure 10 is a side view of the bucket system with the rear portions of the first and second rails in the extended position;

[030] Figure 11 is an upper perspective view showing the bucket sliding rearwardly within the first and second rails;

[031] Figure 12 is a lower perspective view showing the bucket sliding rearwardly;

[032] Figure 13 is an upper perspective view showing tipping of the bucket;

[033] Figure 14 is a lower perspective view showing tipping of the bucket;

[034] Figure 15 is a side view showing tipping of the bucket;

[035] Figure 16 is an upper perspective view of the bucket system showing the bucket in a stored position;

[036] Figure 17 is a lower perspective view of the bucket system showing the bucket in the stored position;

[037] Figure 18 is an upper perspective view of a vehicle with the bucket system fitted into the tray; and

[038] Figure 19 is an upper perspective view of the vehicle showing the bucket system with the bucket in the tipped position.

Detailed Description of Preferred Embodiments

[039] Referring to the Figures, there is shown a bucket system 10 comprising generally a frame 12 and a bucket 14. The bucket system 10 is for use within a

tray 11 of a vehicle 13. The frame 12 of the bucket system 10 is to be mounted adjacent a floor 15 of the tray 11 of the vehicle 13.

[040] The bucket 14 comprises generally an open topped receptacle defined by a base wall 18 and an edge wall extending upwardly from around the periphery of the base wall 18. The base wall 18 is rectangular in shape to generally match the shape of the floor 15 of the tray 11 and the edge wall therefore comprises front and rear walls 20 and 21 and first and second side walls 22 and 23. References to front and rear relate generally to the sides of the bucket system 10 located closest to the front and rear of the vehicle 13 respectively.

[041] The bucket 14 is formed from any suitable material, such as a suitable plastic or fibreglass based material. The base wall 18 includes a plurality of parallel ribs 24 to provide additional strength to the base wall 18 of the bucket 14. The first and second side walls 22 and 23 and the front wall 20 are generally perpendicular to the base wall 18 while the rear wall 21 is angled outwardly away from the base wall 18 to allow material within the bucket 14 to more easily slide outwardly from the bucket 14, when the bucket 14 is tipped.

[042] The frame 12 comprises a first rail 26, a second rail 27 and a plurality of cross members 28 extending between the first and second rails 26 and 27. The first and second rails 26 and 27 are parallel to each other and the cross members 28 extend transversely between the first and second rails 26 and 27. The first rail 26 is to be mounted in use adjacent a first side of the tray 11 and the second rail 27 is to be mounted adjacent a second opposite side of the tray 11.

[043] Each of the first and second rails 26 and 27 includes a longitudinal channel 30 extending from a front to a rear end. The channel 30 in the first rail 26 is provided in an outer side of the first rail 26, being a side opposite the second rail 27. The channel 30 in the second rail 27 is provided in an outer side of the second rail 27, being the side opposite the first rail 26. That is, the channels 30 are provided in vertical sides of the first and second rails 26 and 27, with upper and lower sides of the channels 30 being closed. Each of the

first and second rails 26 and 27 are formed in the embodiment shown from a generally C-shaped beam of a suitable material, such as a metallic material.

[044] The bucket 14 is provided with a bucket support 16 mounted to a lower side of the base wall 18. The bucket support 16 engages with the frame 12 to support the bucket 14 above the frame 12. The bucket support 16 includes first and second front wheels 32 and 33 and first and second rear wheels 34 and 35. The first front and rear wheels 32 and 34 are provided on the bucket support 16 adjacent the first side wall 22 such that the first front and rear wheels 32 and 34 may be received within the channel 30 in the first rail 26. The second front and rear wheels 33 and 35 are provided on the bucket support 16 adjacent the second side wall 23 such that the second front and rear wheels 33 and 35 may be received within the channel 30 in the second rail 27. Rear ends of the channels 30 in the first and second rails 26 and 27 are closed such that the rear wheels 34, 35 may not move past the rear ends of the first and second rails 26 and 27.

[045] The bucket support 16 in the embodiment shown includes a first side member 36 and a second side member 37. The first side member 36 comprises an elongate member mounted adjacent a junction of the first side wall 22 and the base wall 18. The first side member 36 includes downturned end portions at opposed ends thereof on which are mounted the first front and rear wheels 32 and 34. The second side member 37 comprises also an elongate member mounted adjacent a junction of the second side wall 23 and the base wall 18. The second side member 37 includes also downturned end portions at opposed ends thereof on which are mounted the second front and rear wheels 33 and 35. The first and second side members 36 and 37 are connected by a plurality of transverse support members 44 which is connected to the lower side of the base wall 18 of the bucket 14.

[046] The first and second side members 36 and 37 are each mounted generally between midpoints of the first and second side walls 22 and 23 and the front wall 20. The bucket 14 therefore extends further outwardly from the bucket support 16 on the rear side of the bucket 14. When the bucket 14 is filled evenly, the weight within the bucket 14 therefore provides a force tending to

rotate the bucket 14 about the frame 12 such that the rear end of the bucket 14 tilts downwardly. Due to the shape of the channels 30 within the rails, the first and second front wheels 32 and 33 would be expected to engage against inner upper surfaces of the channels 30 under load, while the first and second rear wheels 34 and 35 would engage against the lower surfaces of the channels 30.

[047] Each of the first and second rails 26 and 27 includes a front portion 38 and a rear portion 39. The front portion 38 of each of the first and second rails 26 and 27 is dimensioned to extend generally along the length of the floor 15 of the tray 11 of the vehicle 13. The rear portions 39 of each of the first and second rails 26 and 27 are relatively short such that the lengths of the rear portions 39 are similar to the height of a tray door 17 of the tray 11.

[048] Front ends of the rear portions 39 of the first and second rails 26 and 27 are pivotally connected to rear ends of the front portions 38 of the first and second rails 26 and 27. The rear portions 39 of the first and second rails 26 and 27 are thereby each pivotable between an extended position (as can be seen for example in Figure 8) and a stored position (as can be seen for example in Figure 1). In the extended position, the rear portions 39 of the first and second rails 26 and 27 are parallel and colinear with the front portions 38. In the stored position, the rear portions 39 of the first and second rails 26 and 27 are generally perpendicular to the front portions 38.

[049] In the extended position, the rear portions 39 of the first and second rails 26 and 27 extend outwardly above the tray door 17 when open, and the first and second rear wheels 34 and 35 may be slid along the channel 30 into the rear portions 39 of the first and second rails 26 and 27. In the stored position, the rear portions 39 of the first and second rails 26 and 27 are located adjacent and parallel to an inner surface of the tray door 17 in the closed position.

[050] The rear portions 39 and the front portions 38 of the first and second rails 26 and 27 are pivotally connected by hinges 40. The hinges 40 join lower sides of the front and rear portions 38 and 39 of the first and second rails 26 and 27. Rear ends of the front portions 38 and front ends of the rear portions 39 of the first and second rails 26 and 27 are angled. In the embodiment shown, with the

rear portions 39 pivoting through 90°, the rear ends of front portions 38 and front ends of the rear portions 39 are angled at 45° such that the front ends of the rear portions 39 engage with the rear ends of the front portions 38 when the rear portions 39 are in the stored position.

[051] When the rear portions 39 are in the extended positions, the angled ends form gaps 42 in upper sides of the channels 30. The bucket support 14 is arranged such that when the first and second rear wheels 34 and 35 are slid outwardly into the rear portions 39 of the first and second rails 26 and 27, the first and second front wheels 32 and 33 are located adjacent the gaps 42 in the upper sides of the channels 30. As the rear end of the bucket 14 moves outwardly beyond the rear end of the first and second rails 26 and 27, the first and second front wheels 32 and 33 are therefore free to move upwardly through the gaps 42. With the centre of gravity of the bucket 14 located rearwardly of the centre of the bucket support 16, the bucket 14 will tilt as shown in Figures 13 to 15, with the first and second front wheels 32 and 33 moving upwardly through the gaps 42 to disengage from the first and second rails 26 and 27.

[052] In use, the bucket system 10 may be mounted within the tray 11 of the vehicle 13 generally as shown in Figures 18 and 19. During transport, the rear portions 39 of the first and second side rails 26 and 27 are rotated to the stored position so that the tray door 17 may be closed. When it is required to unload the bucket 14, the tray door 17 is opened and the rear portions 39 pivoted to the extended positions, as shown in Figure 19. The bucket 14 may then be slid rearwardly on the first and second rails 26 and 27 until the first and second front wheels 32 and 33 are adjacent the gaps 42 defined between the front and rear portions 38 and 39. The rear end of the bucket 14 may then tilt downwardly as the first and second front wheels 32 and 33 move upwardly and the material within the bucket may be emptied. The position of the bucket support 16 on the bucket 14 assists with rotation of the bucket 14 for tipping.

[053] The bucket system 10 is provided also with a latch mechanism connecting between the bucket support 16 and the frame 12. The latch mechanism restricts movement of the bucket support 16 relative to the frame 12 to stop the bucket 14 from sliding along the rails 26 and 27 during transport.

The latch mechanism includes an actuator 46 connected to a spring biased pin 48 (as best seen in Figure 7) which engages into a hole on the frame 12. The actuator 46 can be moved sideways to disengage the pin 48 from the frame 12 when the bucket 14 is to slide outwardly towards the rear of the first and second rails 26 and 26. The actuator 46 comprises a rod 47 having a distal end which extends rearwardly of the support frame 16 so that the actuator 46 may be operated from someone standing behind the vehicle.

[054] The bucket support 16 is also provided with resilient buffers adjacent the rear side thereof such that the buffers engage with the edge of the tray door 17 of the vehicle 11 when the bucket 14 is tipped to restrict further rotation of the bucket 14.

[055] The components of the bucket system 10 may also be disconnected for storage purposes. The bucket 14, for example, may be disconnected from the bucket support 16 so that it may be placed upside down (as shown in Figures 17 and 18) on top of the components of the frame 12.

[056] It will be readily apparent to persons skilled in the relevant arts that various modifications and improvements may be made to the foregoing embodiments, in addition to those already described, without departing from the basic inventive concepts of the present invention.

Claims

1. A bucket system comprising:

a frame including first and second rails, the first and second rails each including a front portion and a rear portion, the front portions being secured relative to a floor of a tray of a vehicle and the rear portions being pivotable between an extended position, in which the rear portions are parallel to the front portions, and a stored position, in which the rear portions are perpendicular to the front portions; and

a bucket having a bucket support, the bucket support including first and second front wheels and first and second rear wheels, the first front and rear wheels being slidable within a channel extending along the first rail and the second front and rear wheels being slidable within a channel extending along the second rail;

wherein when the rear portions of the first and second rails are moved to the extended positions, a gap is defined in an upper side of each of the first and second channels such when the first and second rear wheels are moved into the first and second channels in the rear portions of the first and second rails, the first and second front wheels may move upwardly through the gaps to allow the bucket to pivot about the first and second rear wheels.

2. A bucket system in accordance with claim 1, wherein rear ends of the front portions and front ends of the rear portions of the first and second rails are angled such that the front ends of the rear portions engage with the rear ends of the front portions when the rear portions are in the stored position and define the gaps in the extended position.

3. A bucket system in accordance with claim 2, wherein the rear ends of front portions and front ends of the rear portions are angled at 45° such that the front ends of the rear portions engage with the rear ends of the front portions when the rear portions are in the stored position.

4. A bucket system in accordance with any one of the preceding claims, wherein the front and rear portions of the side rails are connected together by hinges on lower sides thereof.

5. A bucket system in accordance with any one of the preceding claims, wherein the first and second rails comprises C-shaped members such that the channels are provided in vertical sides of the first and second rails and upper and lower sides of the channels are closed such that the wheels may engage against inner surfaces of the upper and lower sides of the channels.

6. A bucket system in accordance with claim 5, wherein the channels are provided in outer sides of the first and second rails.

7. A bucket system in accordance with any one of the preceding claims, wherein the channels in the first and second rails are closed at the rear ends.

8. A bucket system in accordance with any one of the preceding claims, wherein the centre of gravity of the bucket is located rearwardly of the centre of the bucket support such that the bucket tends to tip rearwardly when the front wheels are located adjacent the gap.

9. A bucket system in accordance with any one of the preceding claims, wherein the bucket comprises a base wall and an edge wall extending upwardly from around the periphery of the base wall.

10. A bucket system in accordance with claim 9, wherein the base wall is rectangular in shape and the edge wall comprises front and rear walls and first and second side walls.

11. A bucket system in accordance with claim 10, wherein the first and second side walls and the front wall are perpendicular to the base wall and the rear wall is angled outwardly away from the base.

12. A bucket system in accordance with claim 10 or 11, wherein the bucket support includes a first side member located adjacent the first side wall and a second side member located adjacent the second side wall, the first side

member including the first front and rear wheels and the second side member including the second front and rear wheels.

13. A bucket system in accordance with claim 12, wherein each of the first and second side members includes downturned end portions on which the wheels are mounted.

14. A bucket system in accordance with claim 13, wherein the first and second side members are mounted between midpoints of the first and second side walls and the front wall.

15. A bucket system in accordance with any one of the preceding claims, wherein a latch mechanism is provided to restrict sliding motion of the bucket support relative to the frame.

16. A bucket system in accordance with claim 15, wherein the latch mechanism includes an actuator provided to move a spring biased pin on the bucket support such that moving the actuator disengages the pin from the frame.

17. A bucket system in accordance with claim 16, wherein the actuator comprises a rod 47 having a distal end which extends rearwardly of the support frame 16.

18. A bucket system in accordance with any one of the preceding claims, wherein resilient buffers are provided on the bucket support adjacent a rear side thereof such that the buffers engage with an edge of a tray door of the vehicle when the bucket is tipped to restrict further rotation of the bucket.

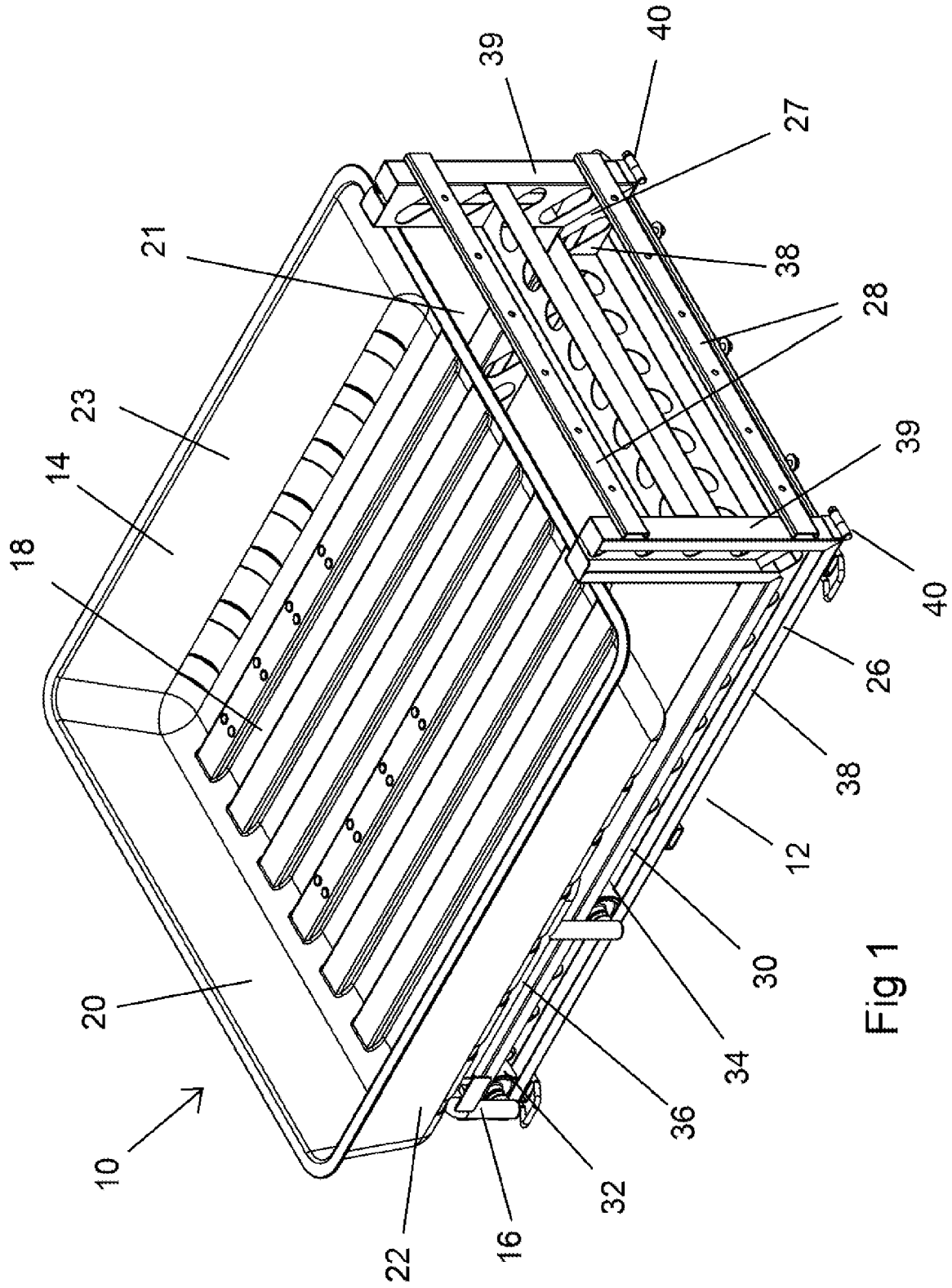

Fig 1

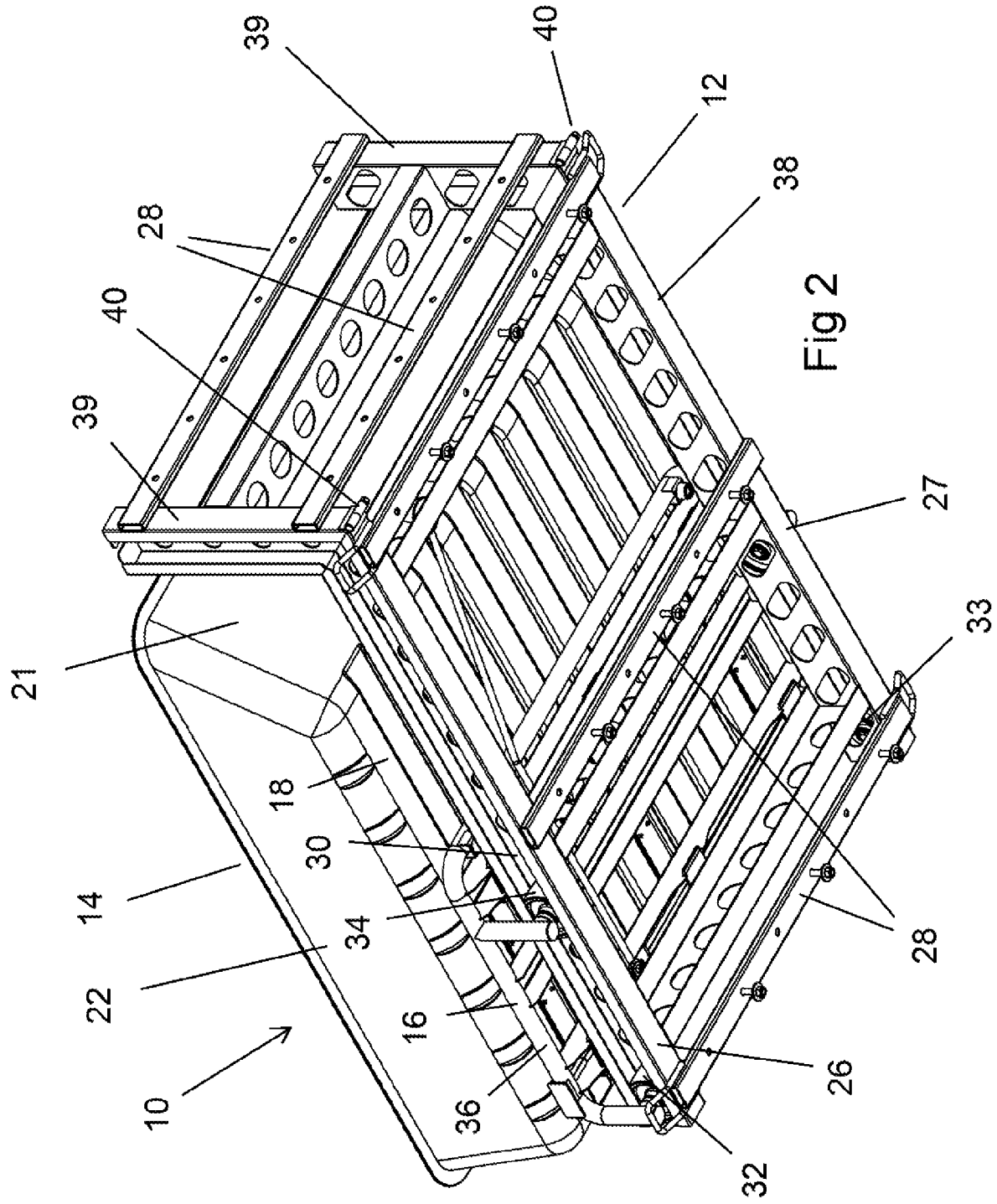

Fig 2

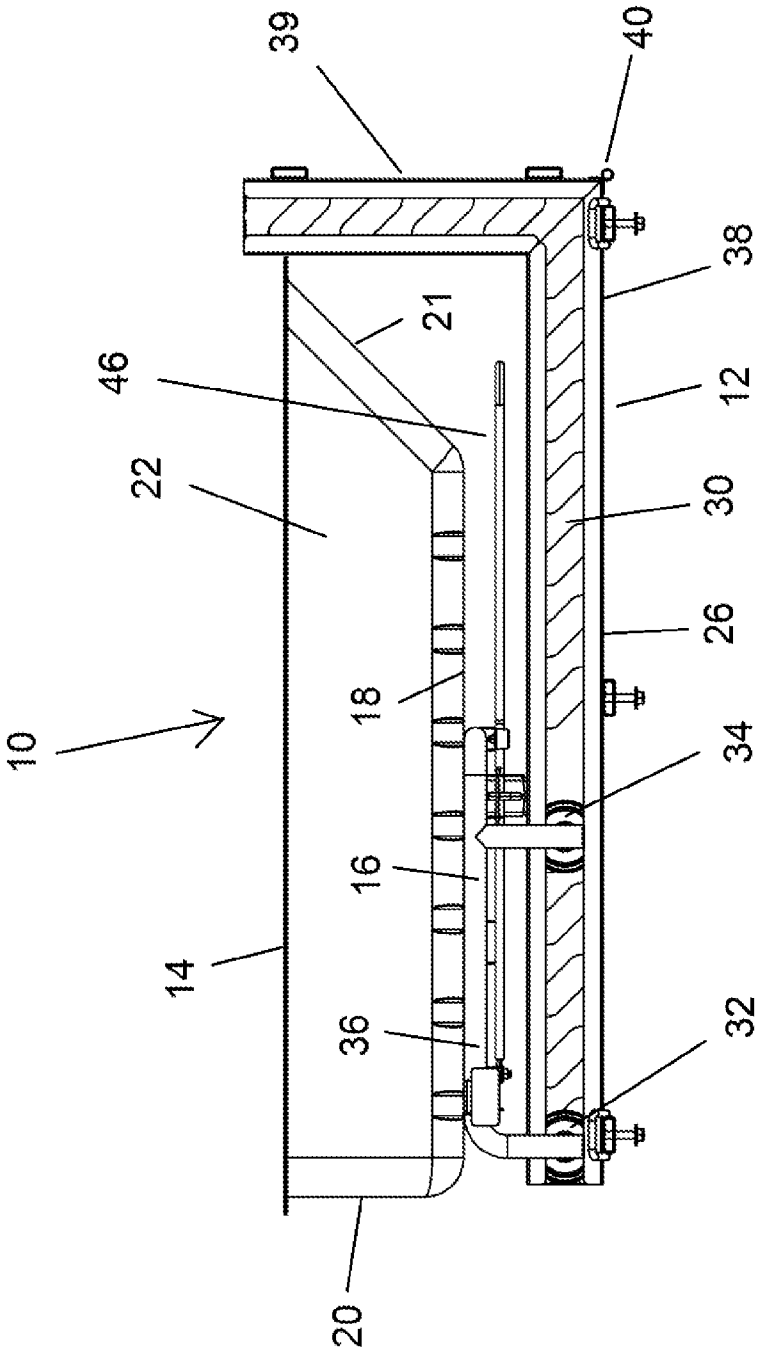

Fig 3

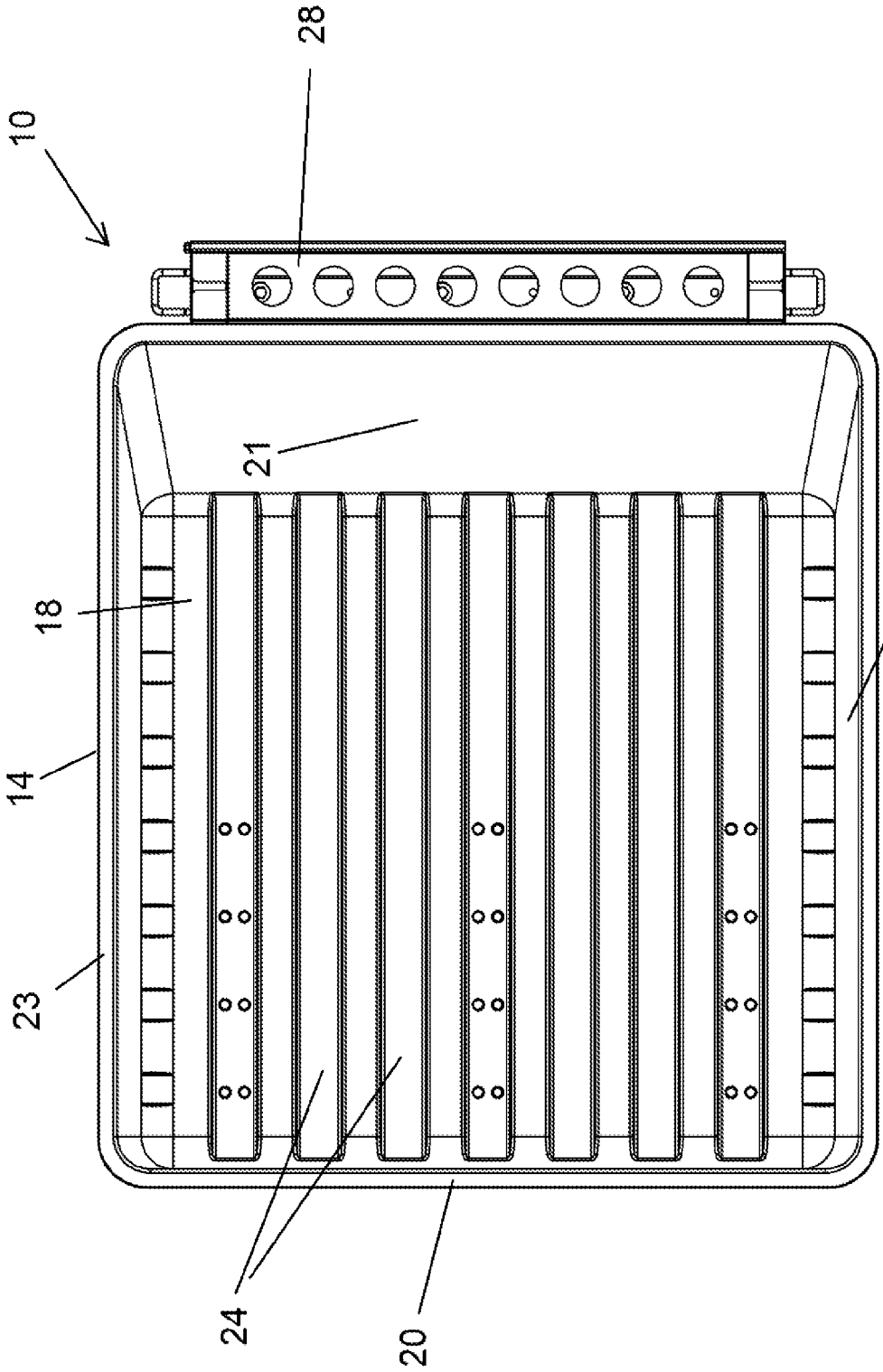

Fig 4

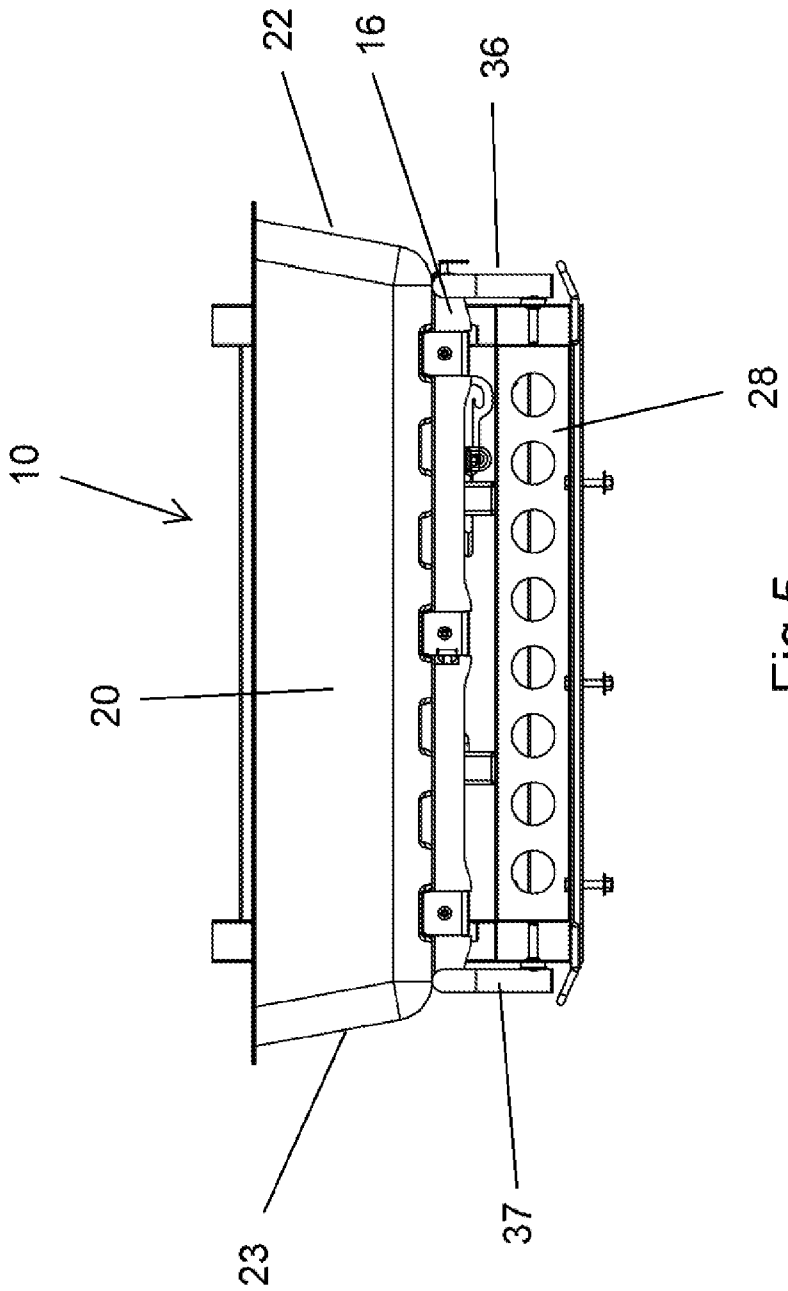

Fig 5

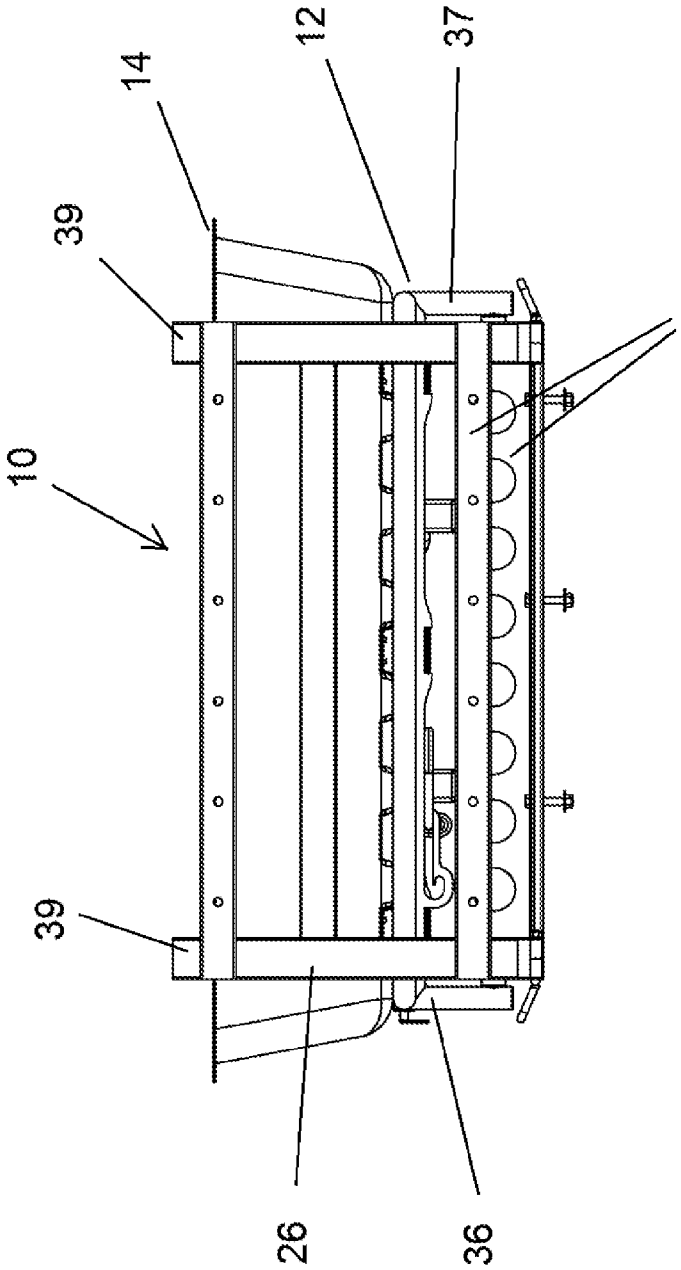

Fig 6

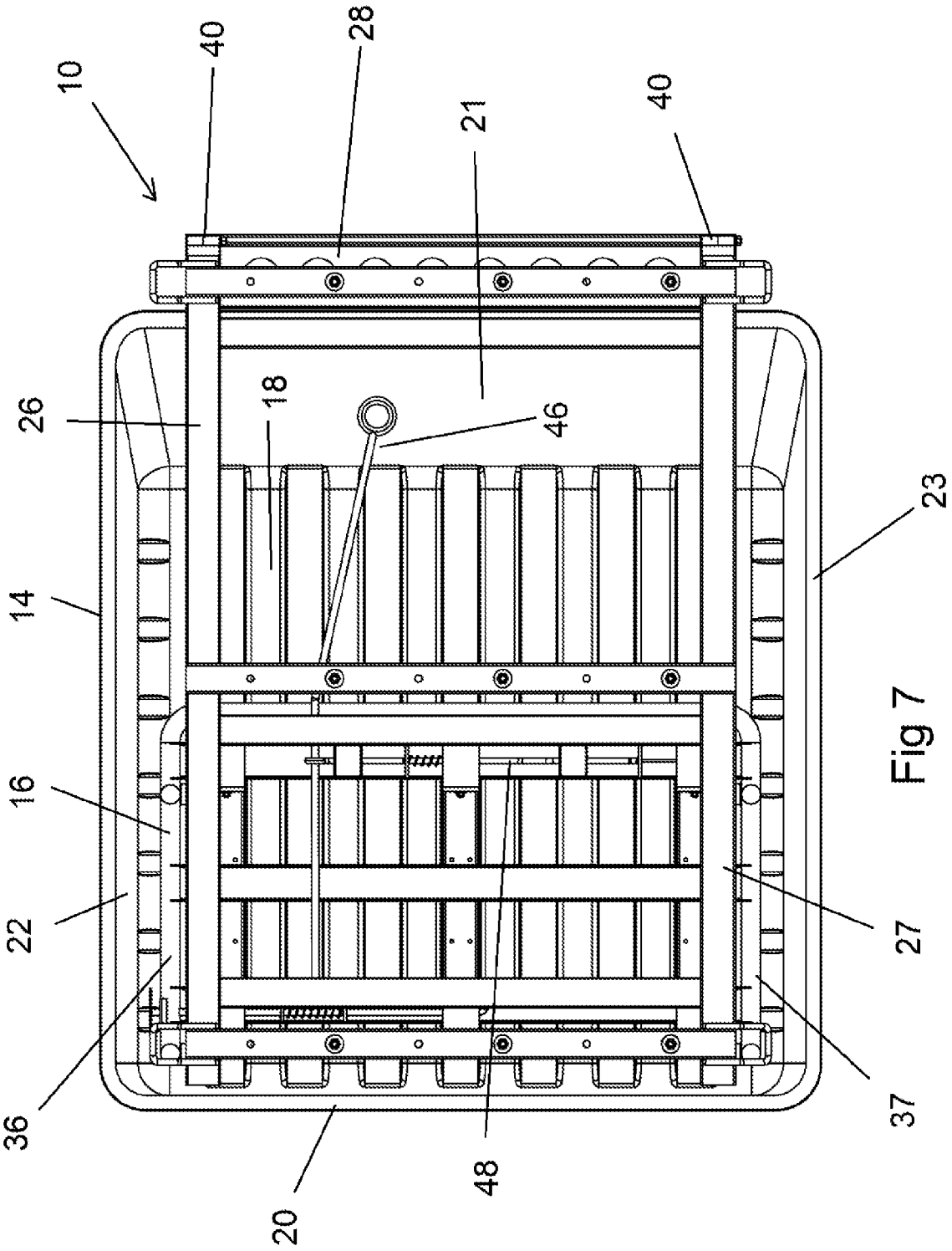

Fig 7

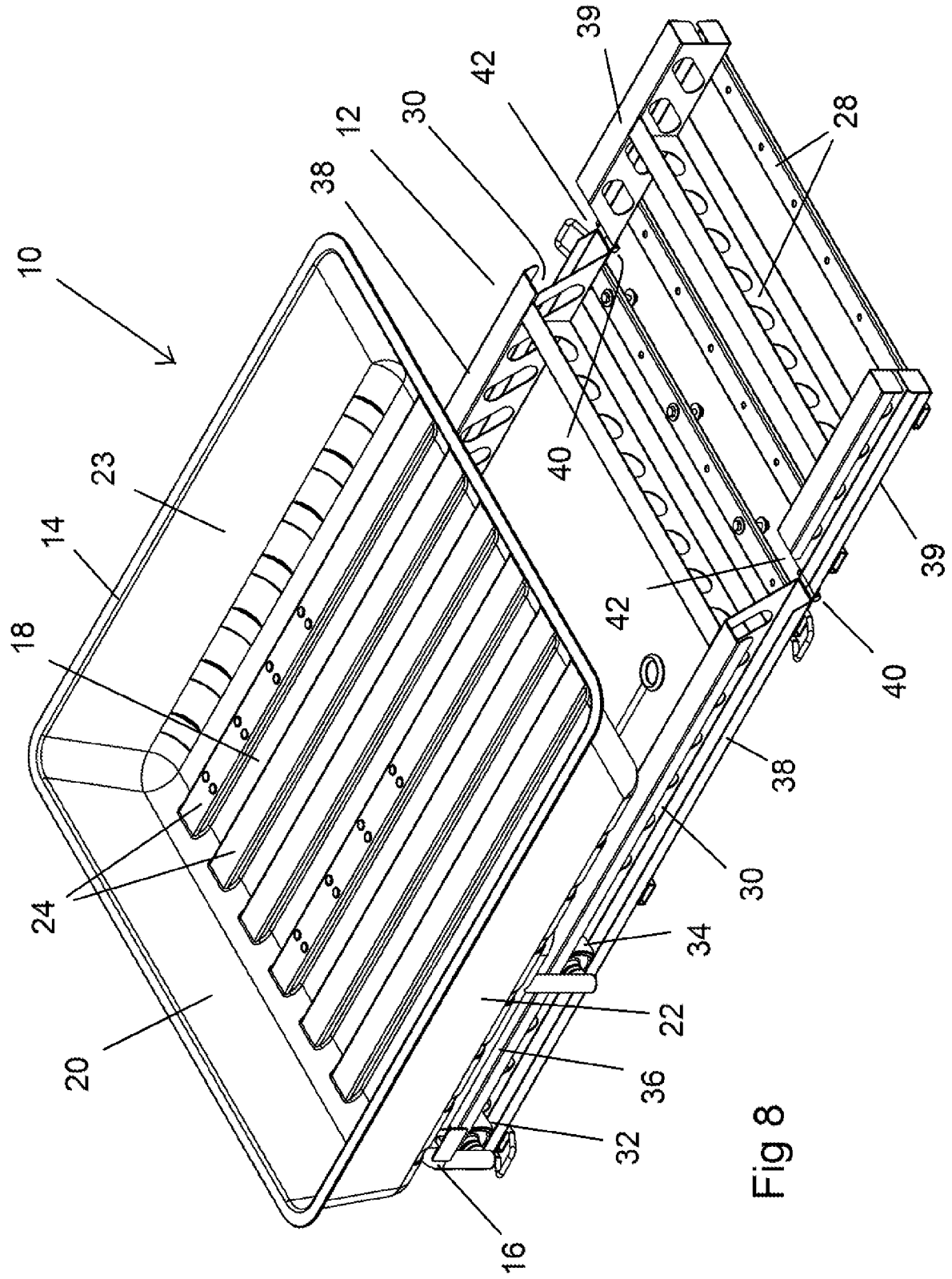

Fig 8

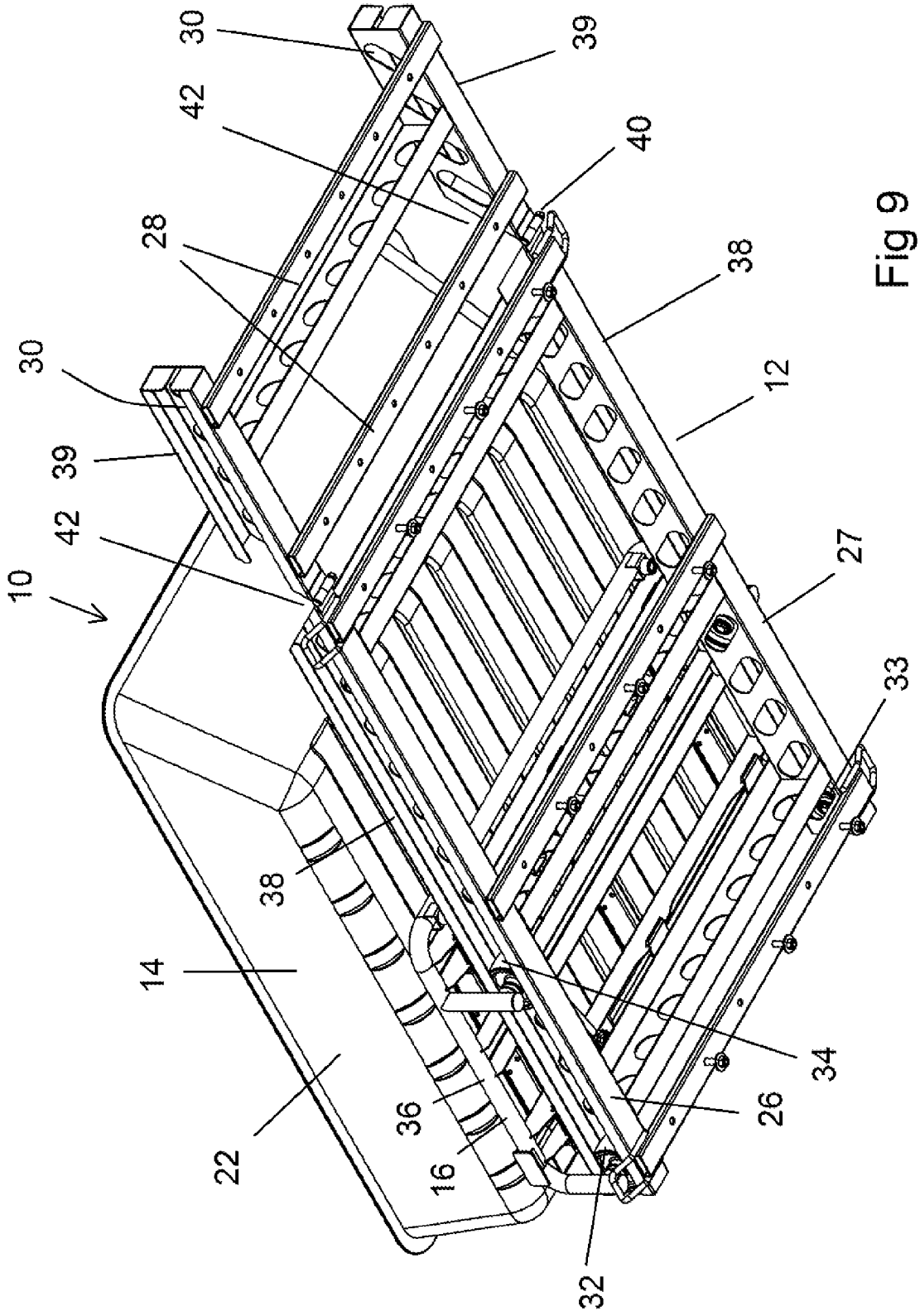

Fig 9

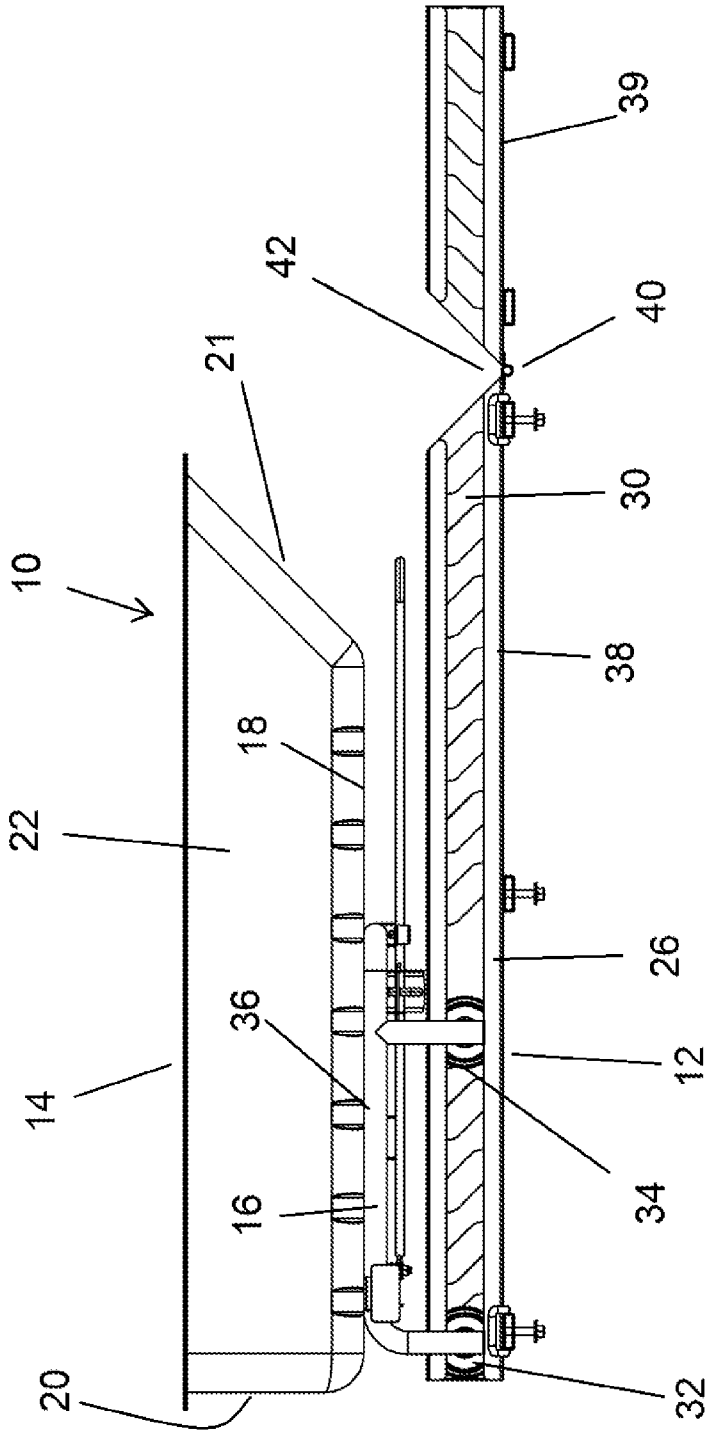

Fig 10

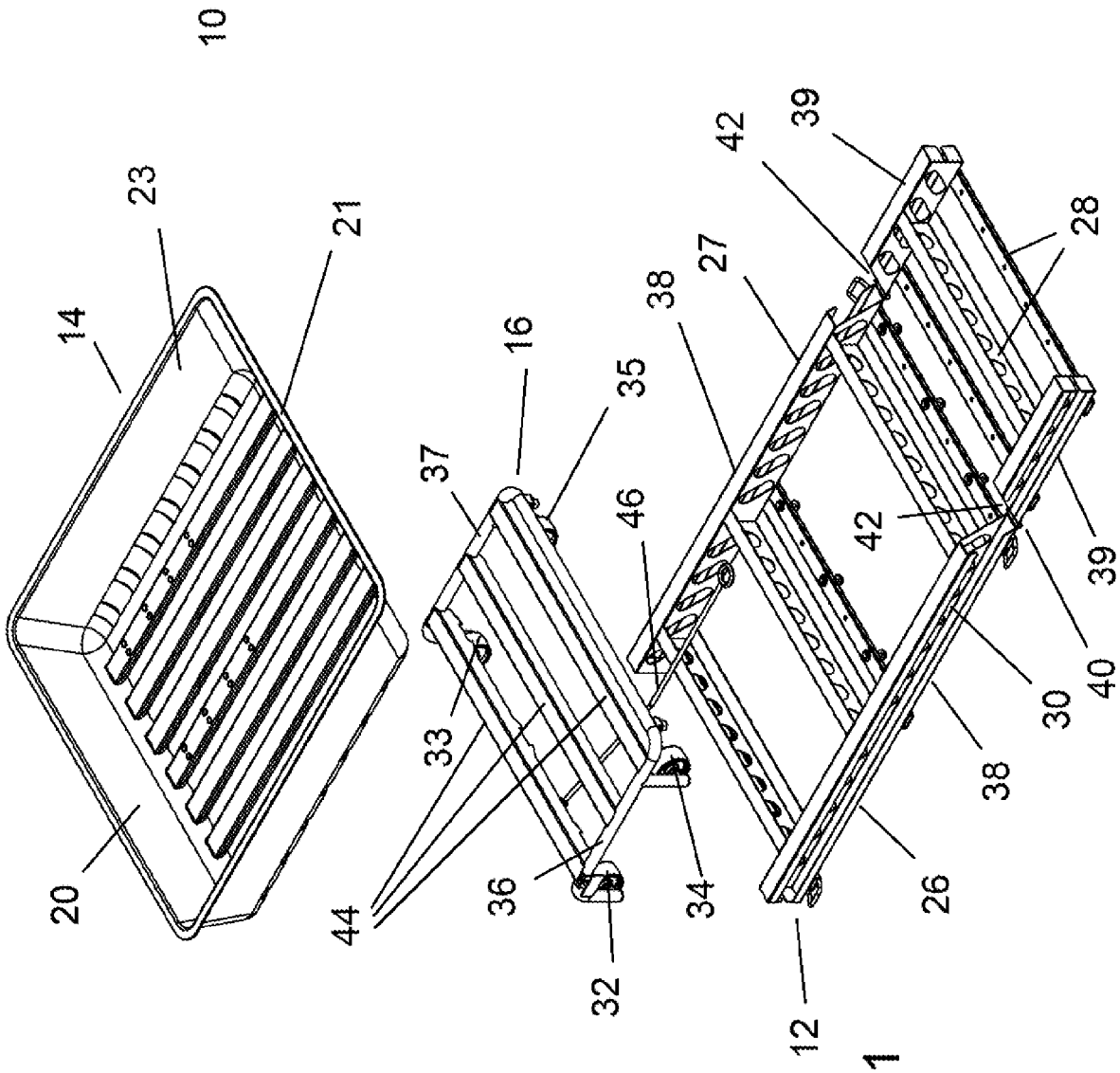
10
14
23
21
20
16
35
37
33
44
36
32
34
46
38
27
42
39
28
42
39
40
30
38
26
12

Fig 11

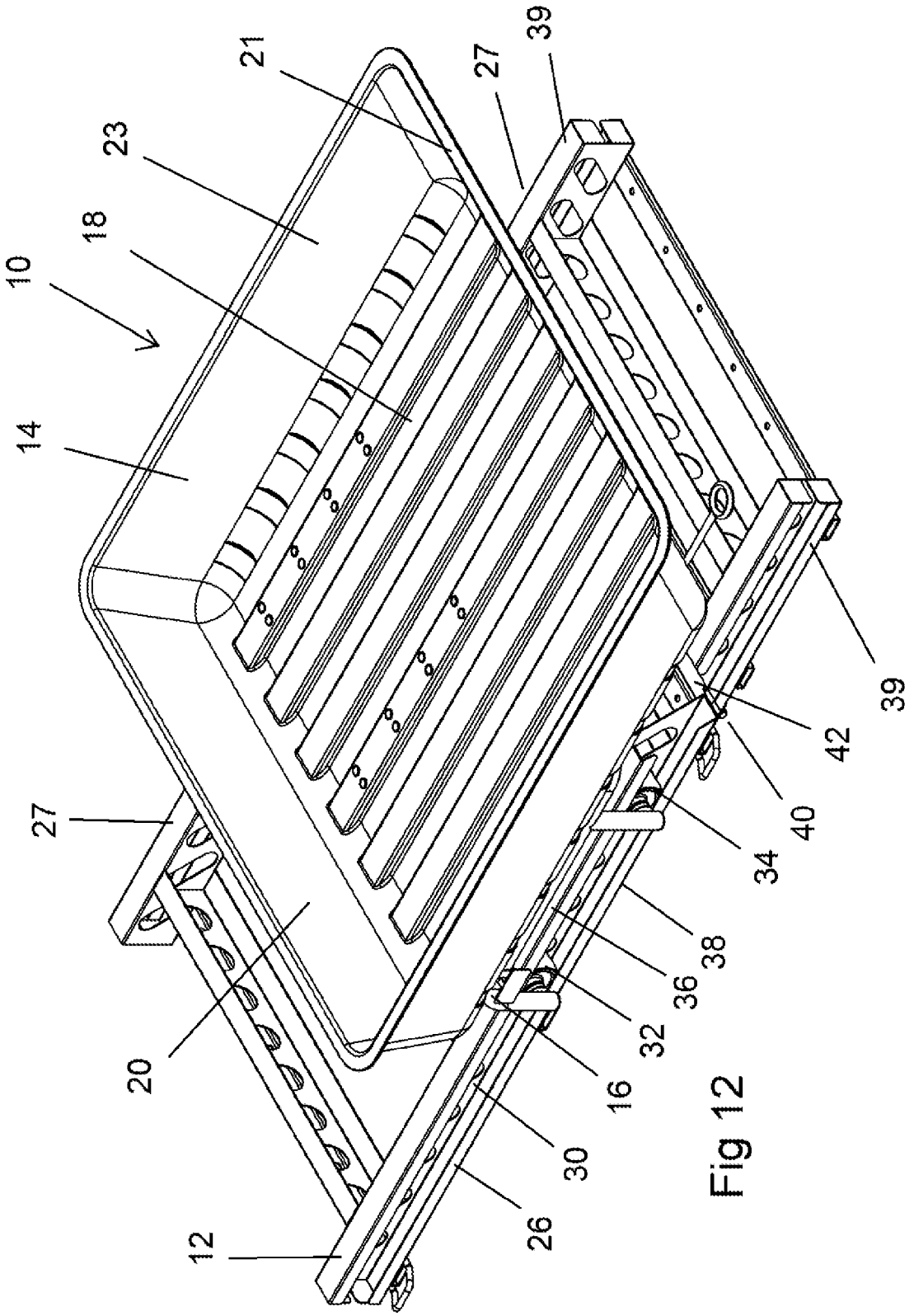

Fig 12

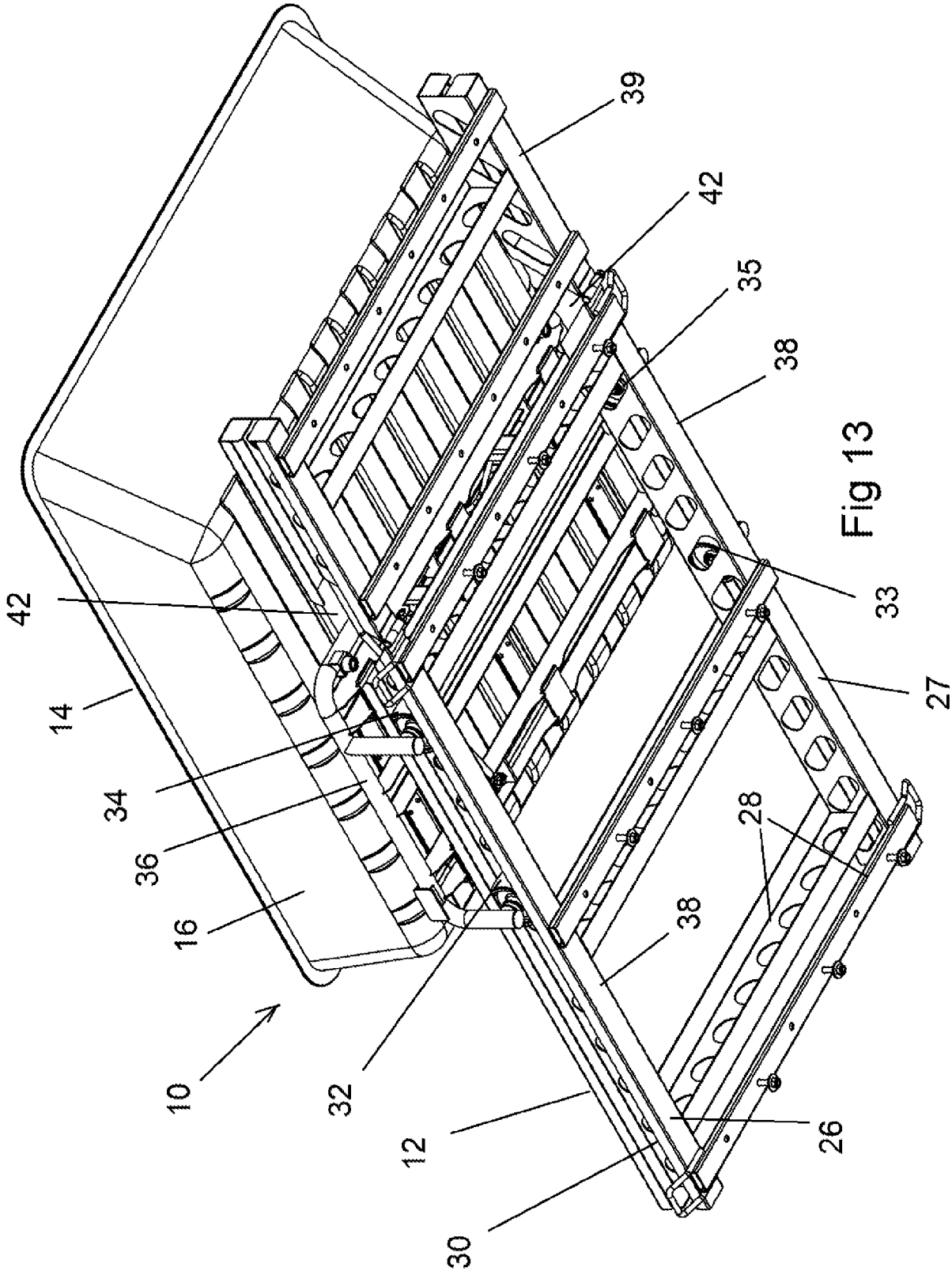

Fig 13

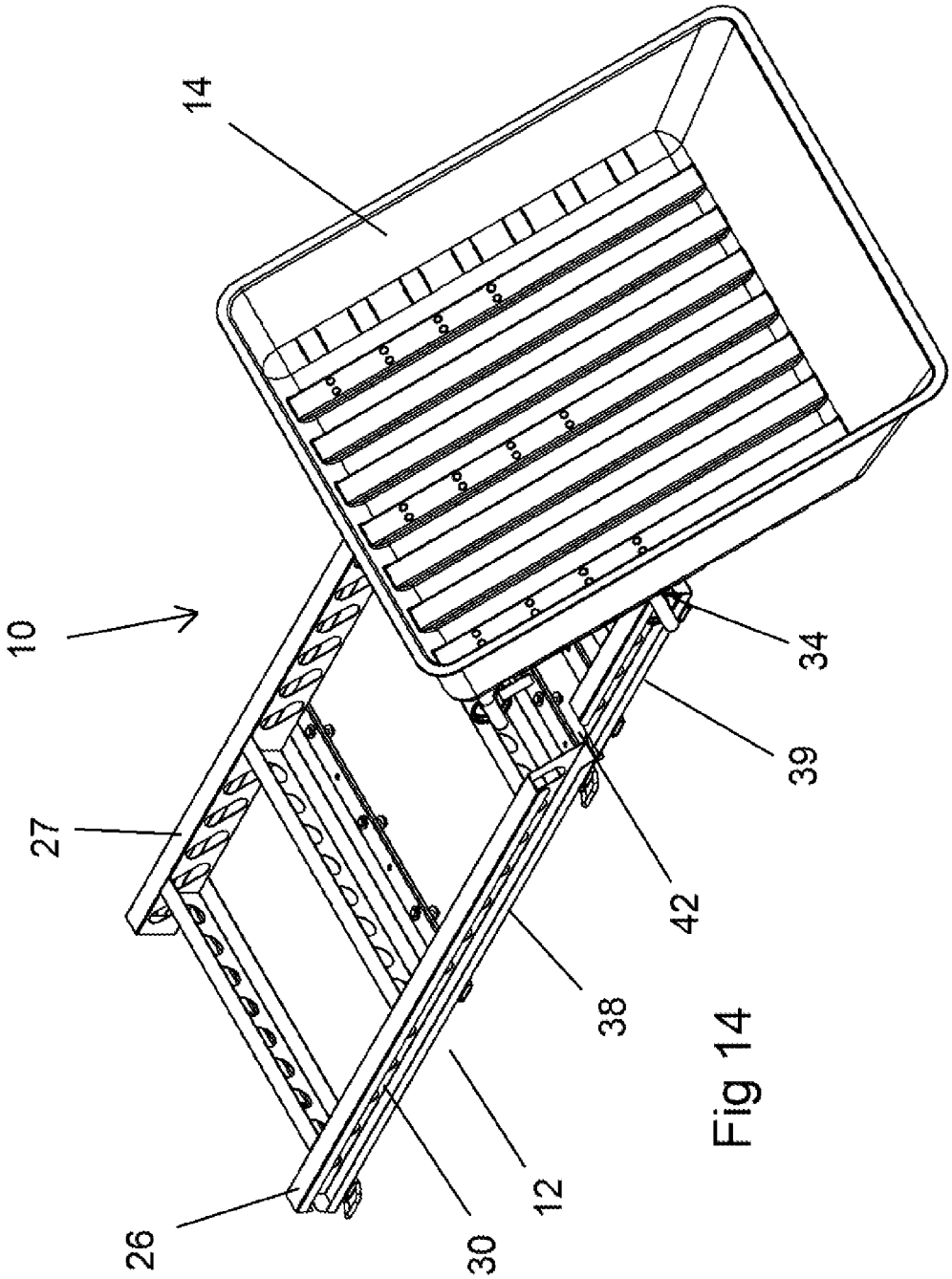

Fig 14

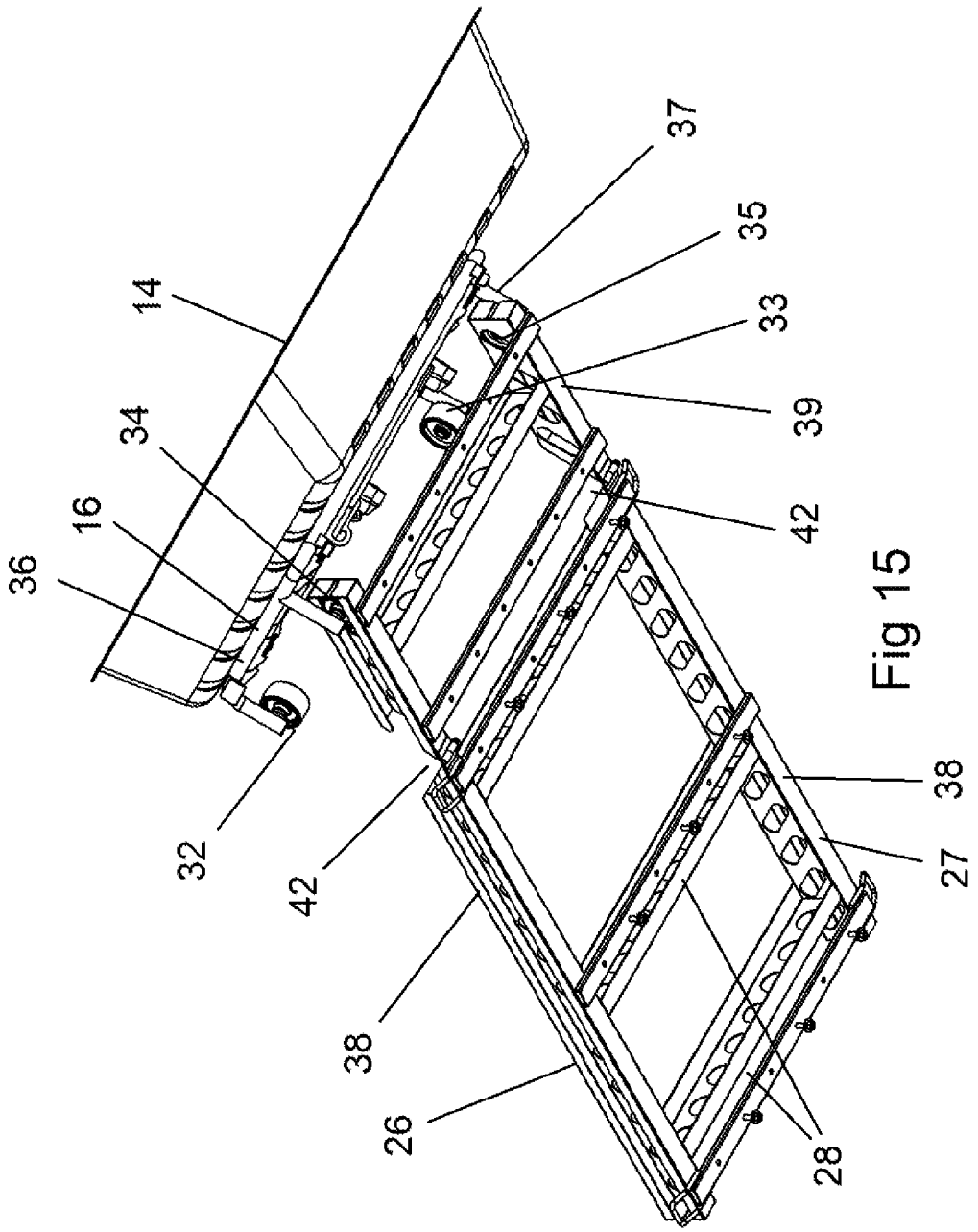

Fig 15

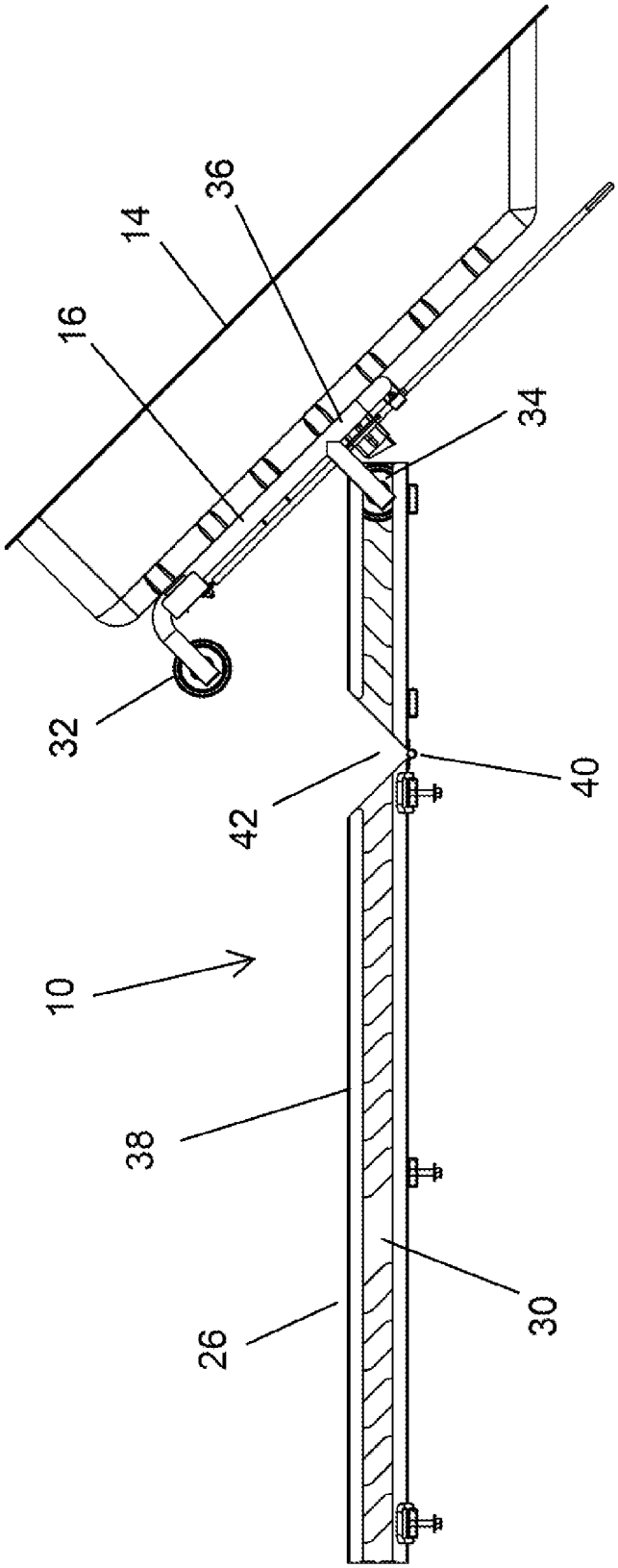

Fig 16

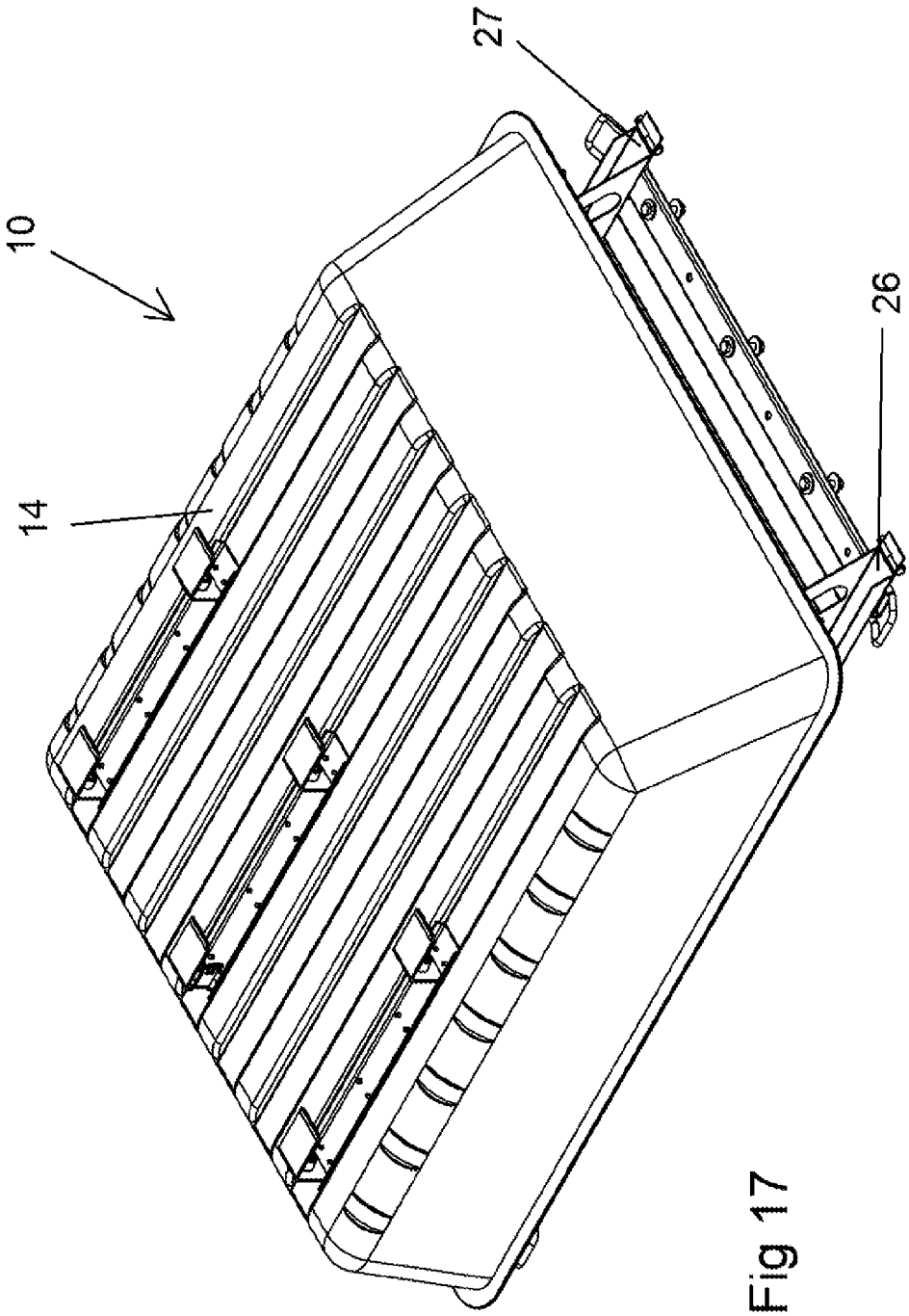

Fig 17

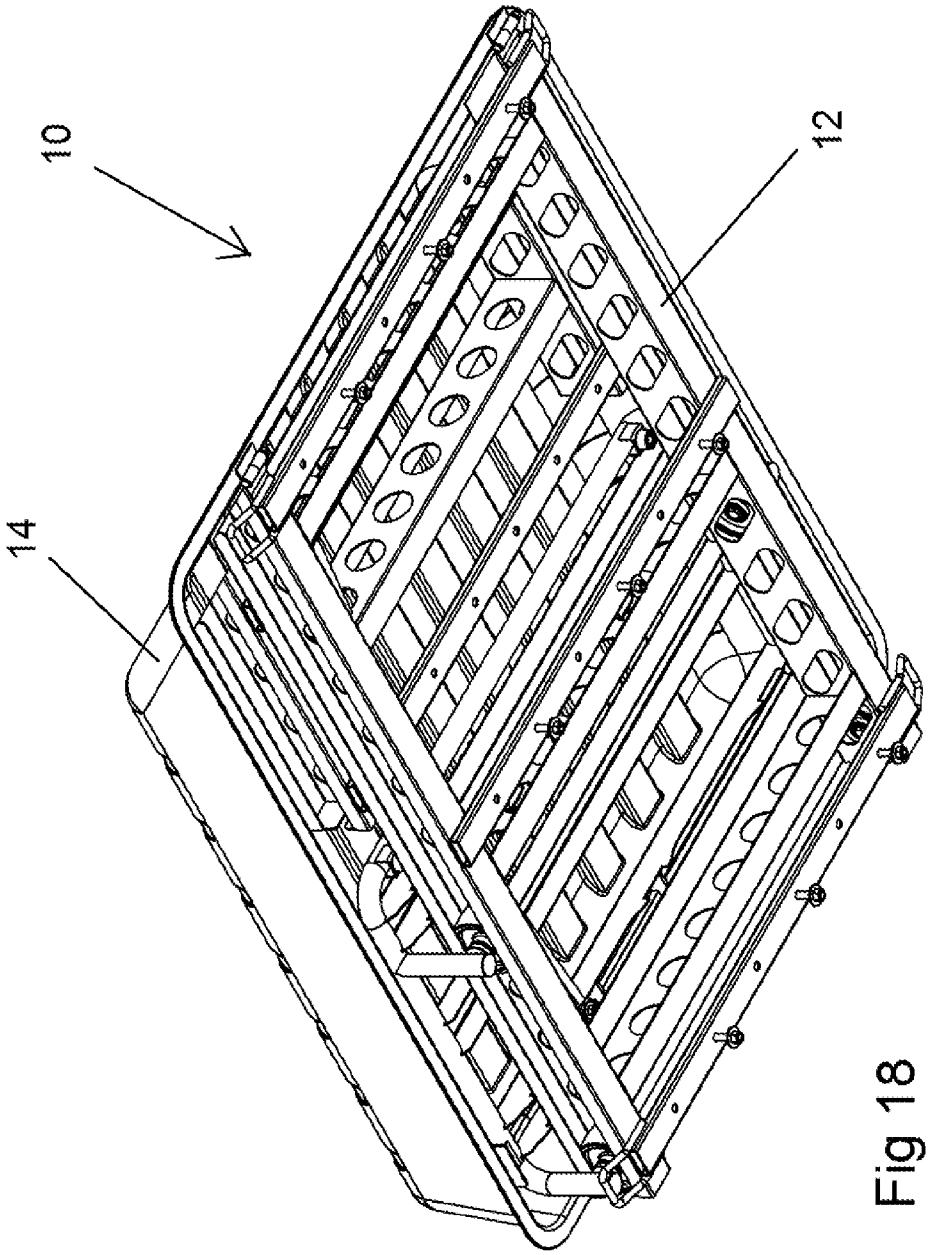

Fig 18

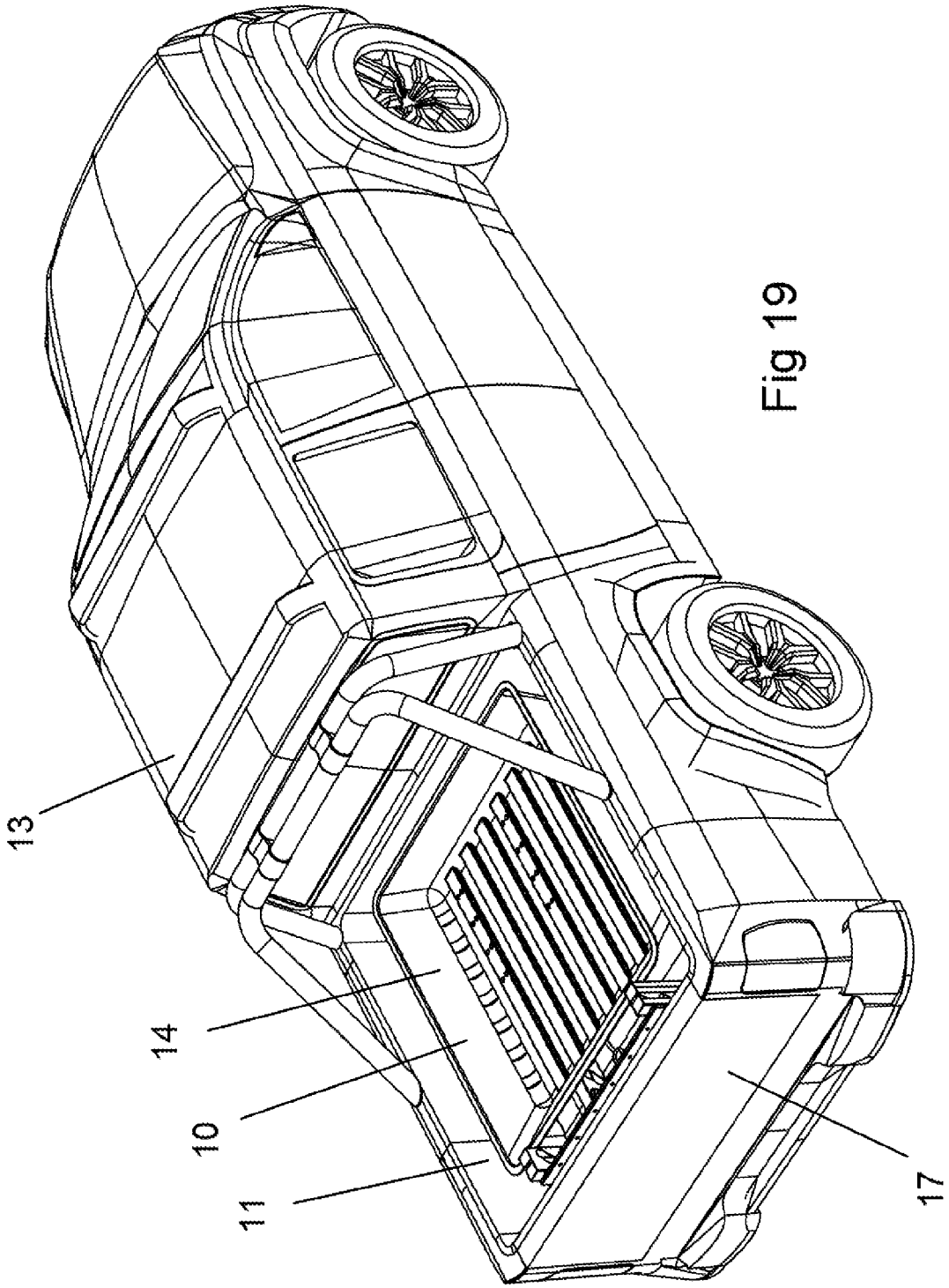

Fig 19

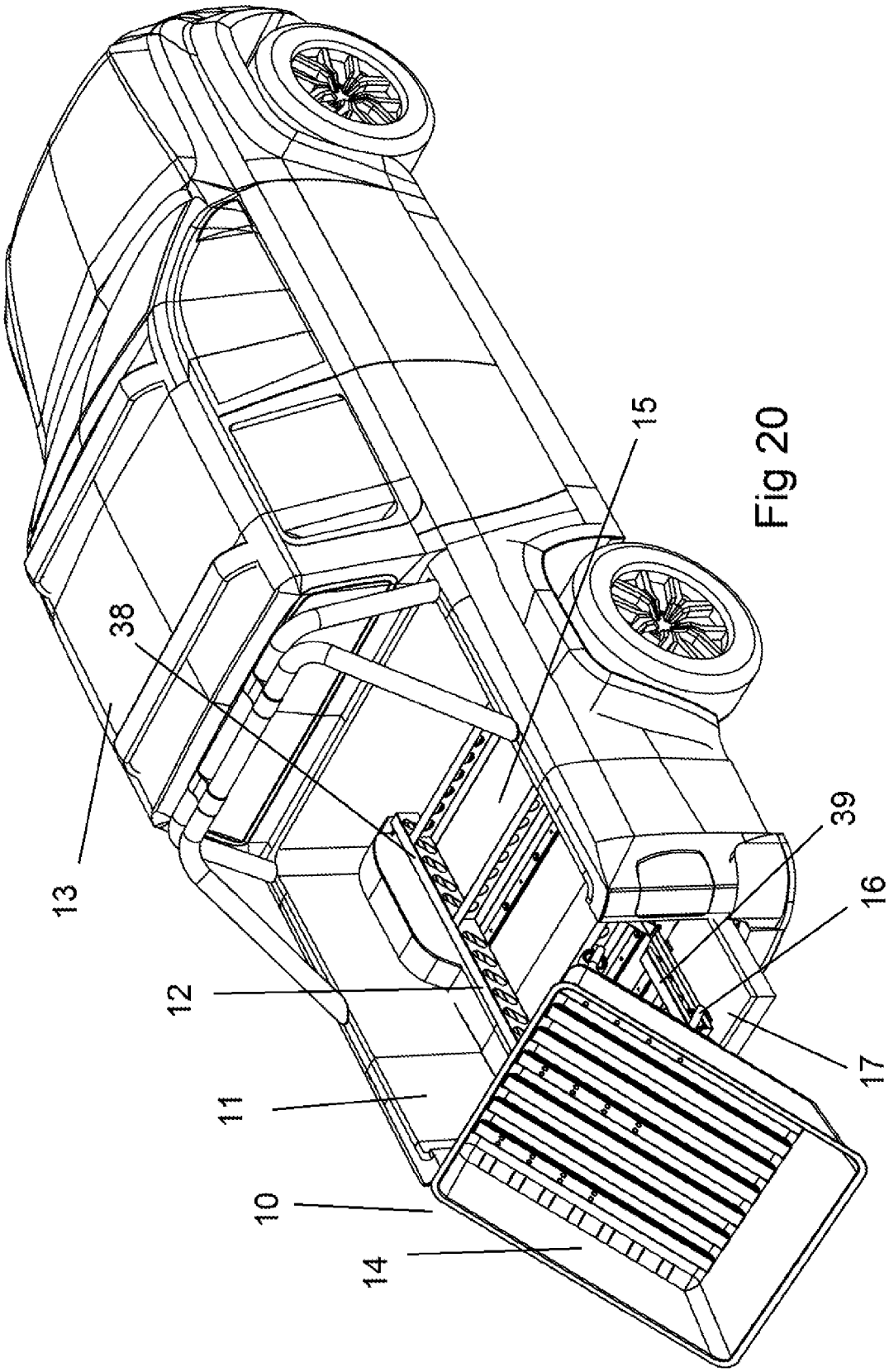

Fig 20

INTERNATIONAL SEARCH REPORT

International application No.
PCT/AU2021/050131

A. CLASSIFICATION OF SUBJECT MATTER

B62D 33/027 (2006.01) B60P 1/52 (2006.01) B60P 1/28 (2006.01) B60P 1/64 (2006.01)

According to International Patent Classification (IPC) or to both national classification and IPC

B. FIELDS SEARCHED

Minimum documentation searched (classification system followed by classification symbols)

Documentation searched other than minimum documentation to the extent that such documents are included in the fields searched

Electronic data base consulted during the international search (name of data base and, where practicable, search terms used)

EPODOC, WPIAP: PATENW: IPC/CPC = B60P1/32, B60P1/34, B60P1/286, B60P1/649, B60R5/041, B62D33/0273, B60P1/6427, B60P1/52, B60P1/483, B62D33/02, B60P1/64, B60R5/04 OR B60R9/06 and keywords UTE, pick up truck, rail, track, guide, slot, gap, top, upward, tip, dump, fold, pivot, bin , box, bucket and like terms.

Google Patent Search with similar IPC/CPC and keywords

Auspat & Google Patent search : Jagano Pty Ltd as applicant and Allen, Gavin John; Khoury, Edward Joseph; Khoury, Ross Stanley as inventors

C. DOCUMENTS CONSIDERED TO BE RELEVANT

Category*	Citation of document, with indication, where appropriate, of the relevant passages	Relevant to claim No.
	Documents are listed in the continuation of Box C	

[X] Further documents are listed in the continuation of Box C [X] See patent family annex

* Special categories of cited documents:

"A" document defining the general state of the art which is not considered to be of particular relevance

"D" document cited by the applicant in the international application

"E" earlier application or patent but published on or after the international filing date

"L" document which may throw doubts on priority claim(s) or which is cited to establish the publication date of another citation or other special reason (as specified)

"O" document referring to an oral disclosure, use, exhibition or other means

"P" document published prior to the international filing date but later than the priority date claimed

"T" later document published after the international filing date or priority date and not in conflict with the application but cited to understand the principle or theory underlying the invention

"X" document of particular relevance; the claimed invention cannot be considered novel or cannot be considered to involve an inventive step when the document is taken alone

"Y" document of particular relevance; the claimed invention cannot be considered to involve an inventive step when the document is combined with one or more other such documents, such combination being obvious to a person skilled in the art

"&" document member of the same patent family

Date of the actual completion of the international search	Date of mailing of the international search report
15 March 2021	15 March 2021

Name and mailing address of the ISA/AU	**Authorised officer**
AUSTRALIAN PATENT OFFICE PO BOX 200, WODEN ACT 2606, AUSTRALIA Email address: pct@ipaustralia.gov.au	CheeWei Tan AUSTRALIAN PATENT OFFICE (ISO 9001 Quality Certified Service) Telephone No. +61262256105

INTERNATIONAL SEARCH REPORT C (Continuation). DOCUMENTS CONSIDERED TO BE RELEVANT		International application No. **PCT/AU2021/050131**
Category*	Citation of document, with indication, where appropriate, of the relevant passages	Relevant to claim No.
Y	CA 2149447 A1 (DONAHUE, DAVID A) 17 November 1996 Figures, Abstract	1-18
Y	US 3004678 A (T.S. GOLASKI) 17 October 1961 Fig.3, Col.3, Lines 15-22	1-18
A	US 5931632 A (DONGILLI et al.) 03 August 1999	
A	NZ 264919 A (WALLACE BRIAN RICHARD) 26 August 1998	
A	US 9550442 B2 (HANSON, JR.) 24 January 2017	
A	US 2015/0251709 A1 (BUYERS PRODUCTS COMPANY) 10 September 2015	
A	GB 2518702 A (BORDER AUTOMATION SERVICES LIMITED) 01 April 2015	
A	US 4647110 A (MCKEE) 03 March 1987	
A	JP S5097115 U (UNKNOWN) 13 August 1975	
A	KR 20050008933 A (HYUNDAI MOTOR CO LTD) 24 January 2005	

INTERNATIONAL SEARCH REPORT Information on patent family members	International application No. **PCT/AU2021/050131**

This Annex lists known patent family members relating to the patent documents cited in the above-mentioned international search report. The Australian Patent Office is in no way liable for these particulars which are merely given for the purpose of information.

Patent Document/s Cited in Search Report		**Patent Family Member/s**	
Publication Number	**Publication Date**	**Publication Number**	**Publication Date**
CA 2149447 A1	17 November 1996	CA 2149447 A1	17 Nov 1996
US 3004678 A	17 October 1961	US 3004678 A	17 Oct 1961
US 5931632 A	03 August 1999	US 5931632 A	03 Aug 1999
NZ 264919 A	26 August 1998	NZ 264919 A	26 Aug 1998
		AU 5224696 A	21 Nov 1996
US 9550442 B2	24 January 2017	US 2010129185 A1	27 May 2010
		US 9550442 B2	24 Jan 2017
US 2015/0251709 A1	10 September 2015	US 2015251709 A1	10 Sep 2015
		US 9656586 B2	23 May 2017
		CA 2882017 A1	10 Aug 2015
		CA 2974418 A1	10 Aug 2015
		US 2017253162 A1	07 Sep 2017
		US 10532687 B2	14 Jan 2020
GB 2518702 A	01 April 2015	GB 2518702 A	01 Apr 2015
		WO 2015019050 A2	12 Feb 2015
US 4647110 A	03 March 1987	US 4647110 A	03 Mar 1987
JP S5097115 U	13 August 1975		
KR 20050008933 A	24 January 2005	KR 20050008933 A	24 Jan 2005

End of Annex

Due to data integration issues this family listing may not include 10 digit Australian applications filed since May 2001.