United States Patent [19]

Berg et al.

[11] **3,914,886**

[45] **Oct. 28, 1975**

[54] **CLAMSHELL BUCKET ASSEMBLY AND VALVE MEANS ASSOCIATED THEREWITH**

[75] Inventors: **Lawrance F. Berg**, Lockport; **Theodore B. Hogg**, Aurora; **Robert W. Lichti**, Oswego, all of Ill.

[73] Assignee: **Caterpillar Tractor Co.**, Peoria, Ill.

[22] Filed: **Mar. 29, 1974**

[21] Appl. No.: **456,246**

Related U.S. Application Data

[62] Division of Ser. No. 283,818, Aug. 25, 1972, Pat. No. 3,873,133.

[52] **U.S. Cl.** **37/186**; 37/188; 91/436; 285/136; 294/88

[51] **Int. Cl.²** **E02F 3/44**

[58] **Field of Search** ..... 91/420, 436; 294/88; 285/136; 37/182–188; 214/147 G

[56] **References Cited**

UNITED STATES PATENTS

1,483,865	2/1924	Bowen	403/359 X
2,343,491	3/1944	Bard et al.	285/136
2,890,683	6/1959	Pilch	91/436 X
3,241,461	3/1966	Drone	91/436
3,314,709	4/1967	Guinot	37/188 UX
3,481,640	12/1969	Guinot	37/182 X

FOREIGN PATENTS OR APPLICATIONS

343,969	2/1960	Switzerland	285/190

Primary Examiner—Clifford D. Crowder
Attorney, Agent, or Firm—Phillips, Moore, Weissenberger Lempio & Strabala

[57] **ABSTRACT**

A bucket assembly has a bucket which is openable and closable by means of fluid pressure applied to one and the other end of a cylinder. The assembly includes a joint which allows free rotation of the bucket through 360°, meanwhile providing that the fluid pressure may pass through the joint to one or the other side of the cylinder, irrespective of the rotative position of the bucket. A valving system is included for providing rapid opening of the bucket.

6 Claims, 8 Drawing Figures

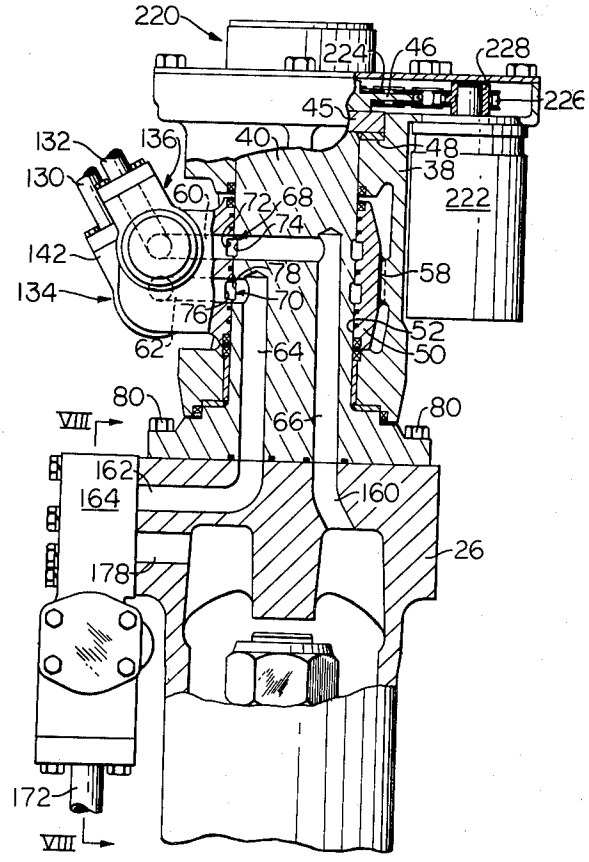

Fig. 1

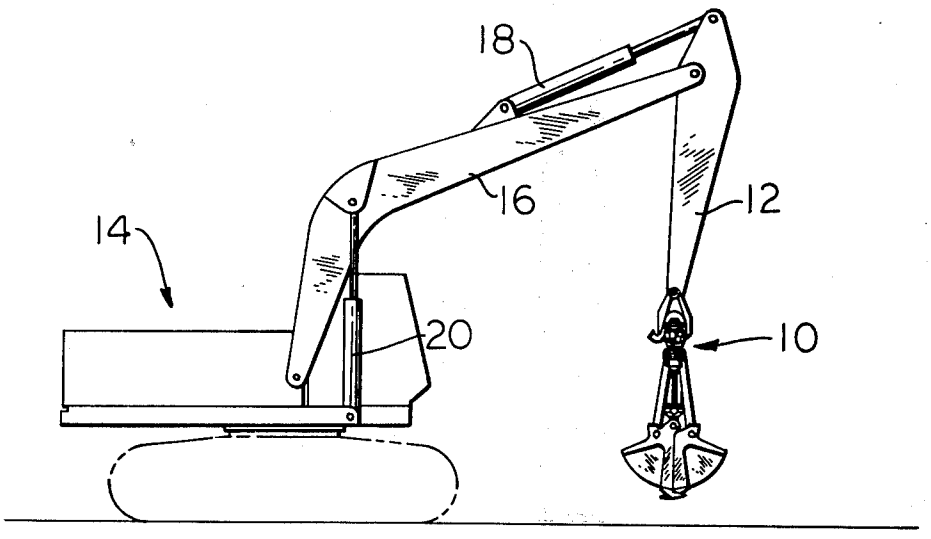

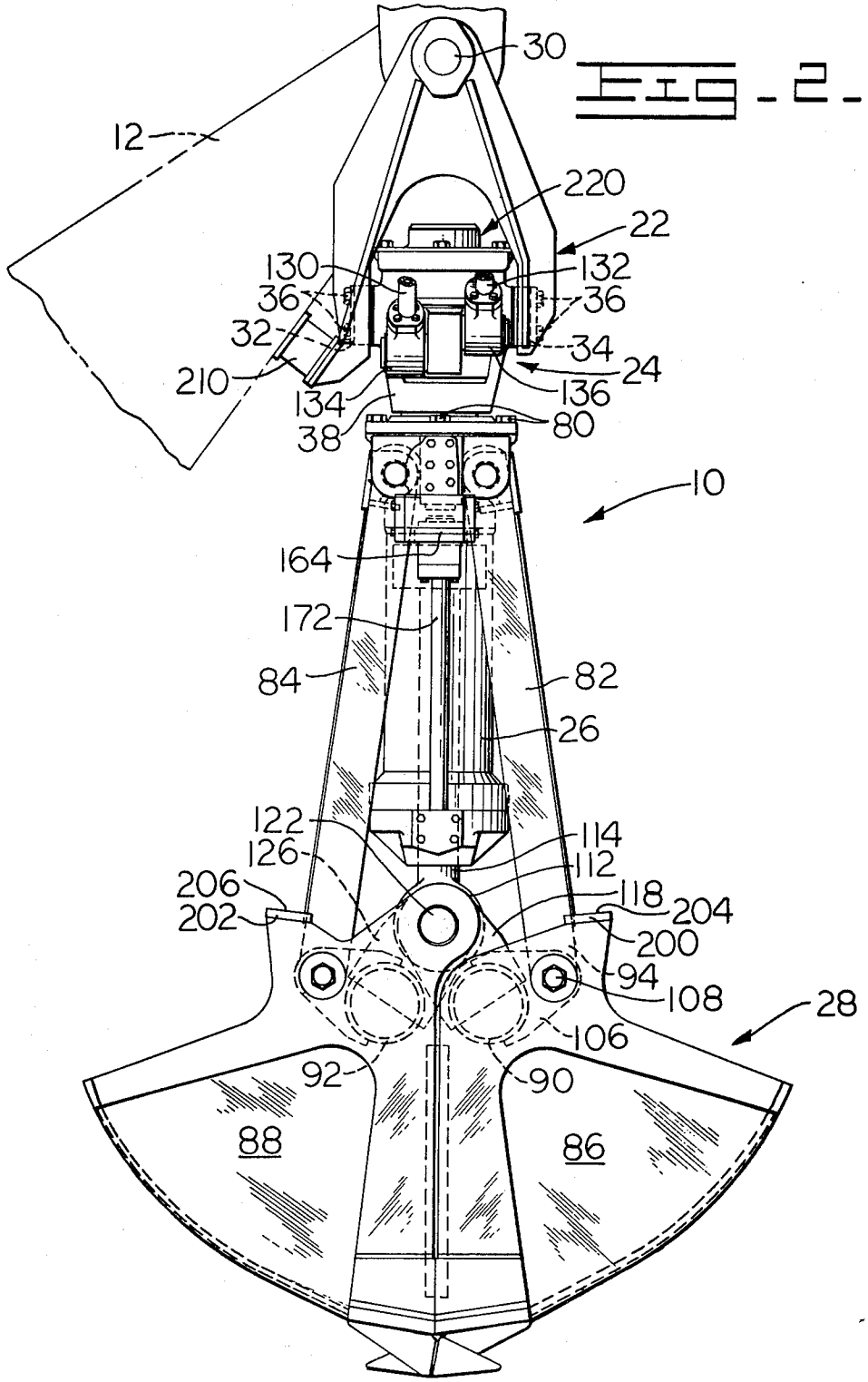
30
12
220
22
130
132
36
36
32
34
24
210
134
136
38
80
10
164
172
84
82
26
122
114
126
112
206
118
204
202
200
94
108
28
106
92
90
88
86

Fig - 2 -

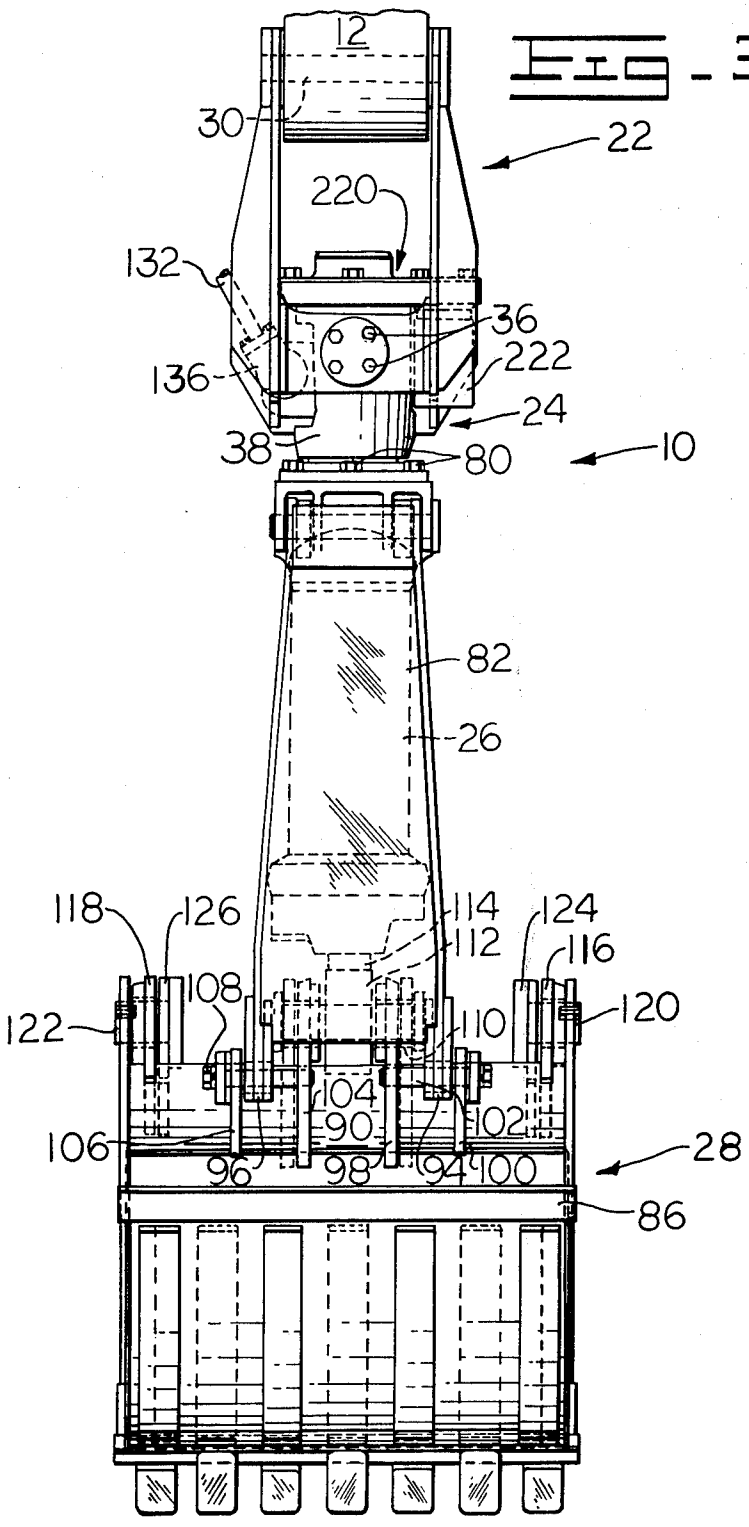
12
30
22
220
132
36
222
136
24
38
80
10
82
26
118
126
114
124
112
116
108
120
122
110
104
90
102
106
96
98
94
100
28
86

Fig. 3.

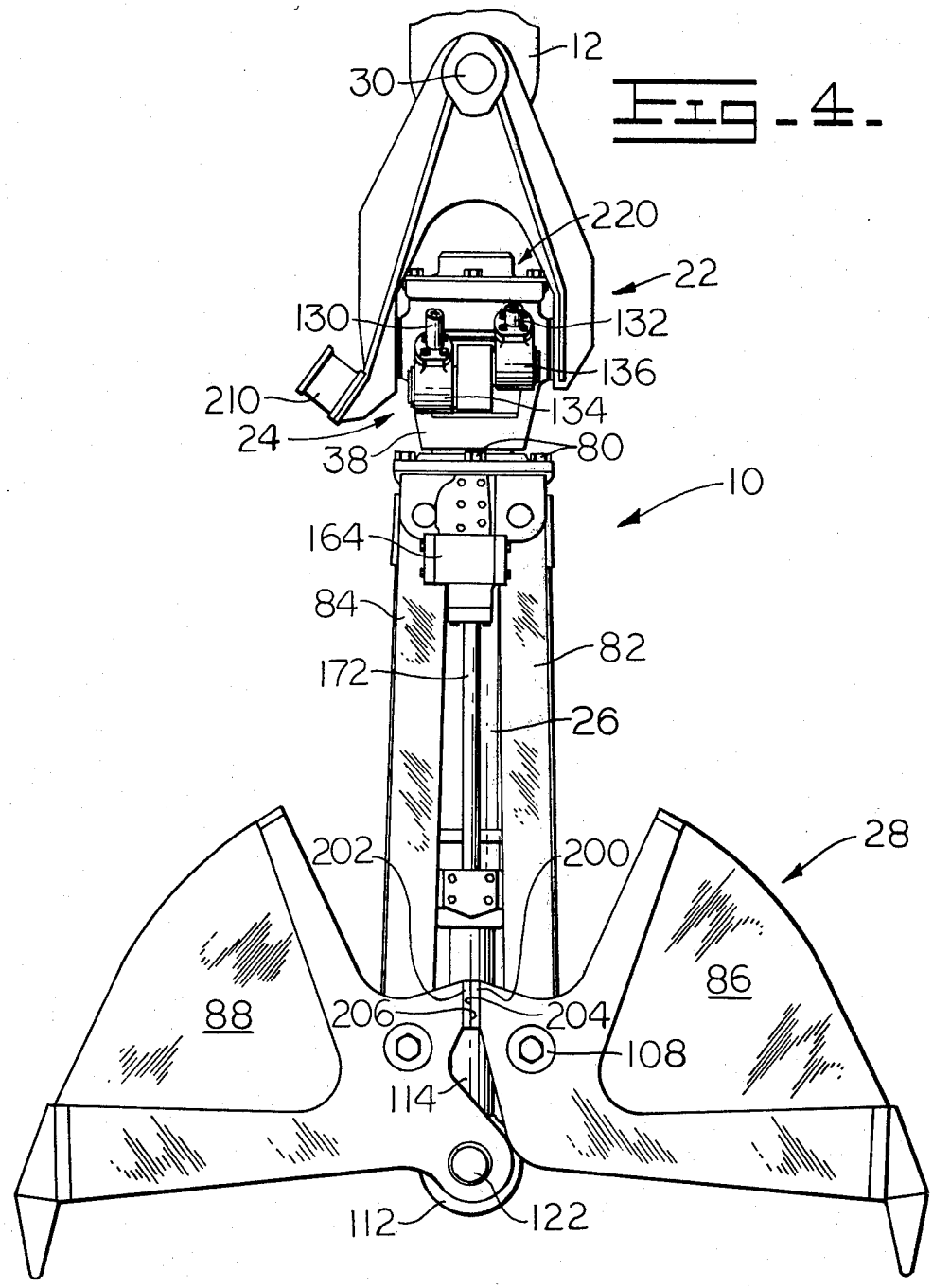
12
30
220
22
130
132
136
210
134
24
38
80
10
164
84
82
172
26
28
202
200
88
86
206
204
108
114
112
122

Fig. 4.

Fig - 5 -

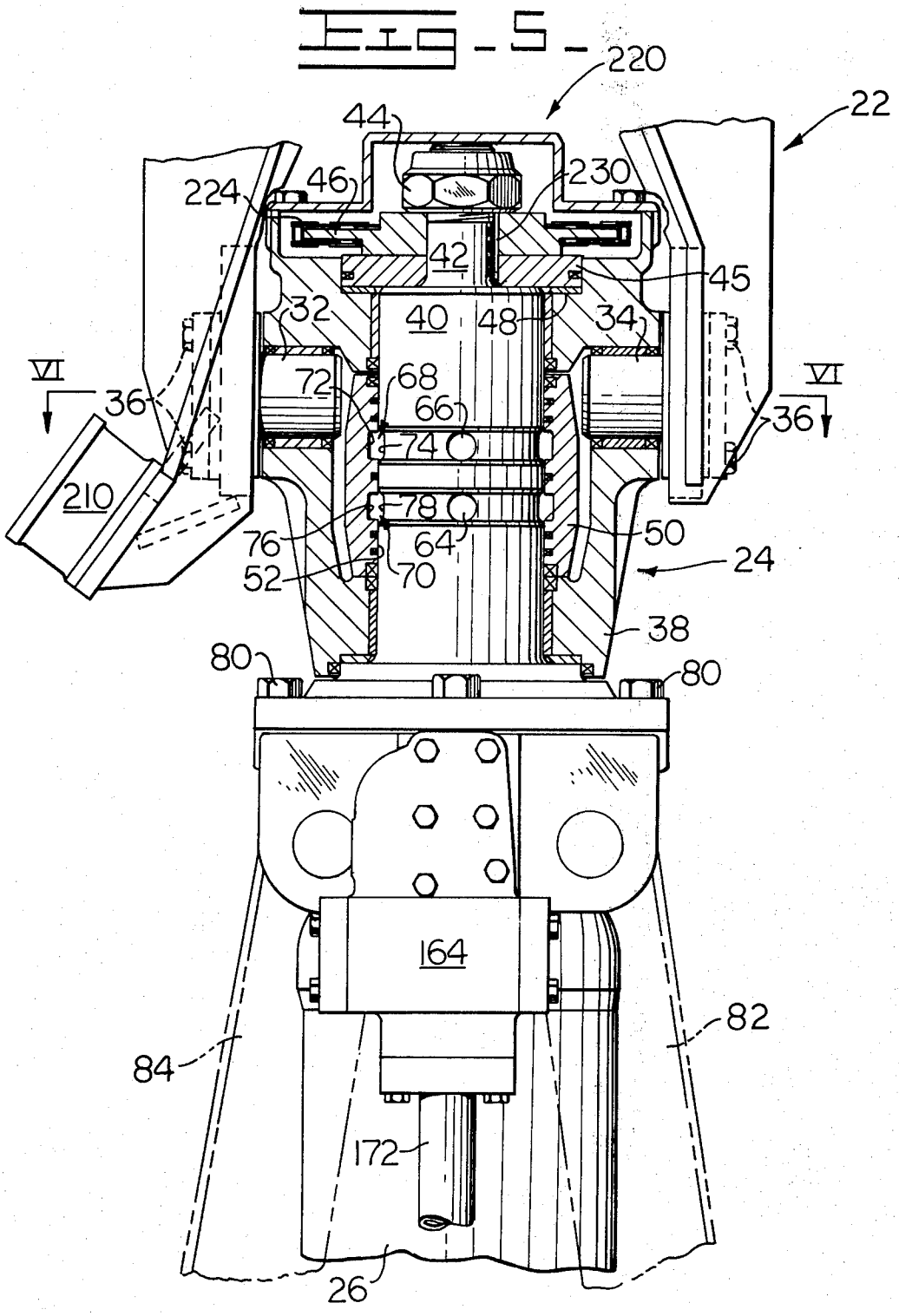
220
22
44
46
224
230
42
45
32
40
48
34
VI
VI
72
68
66
36
36
74
210
78
76
64
50
52
70
24
38
80
80
164
82
84
172
26

FIG-5-

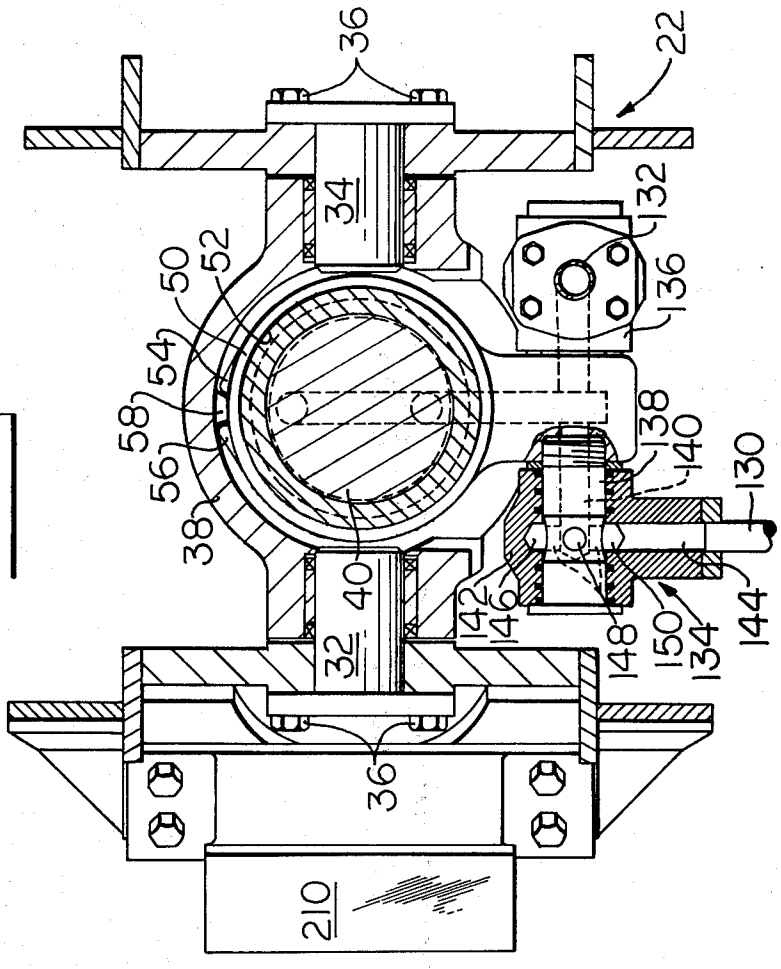
36
22
34
132
136
50
52
54
58
56
38
40
138
140
130
142
146
148
150
134
144
32
36
210

FIG-6-

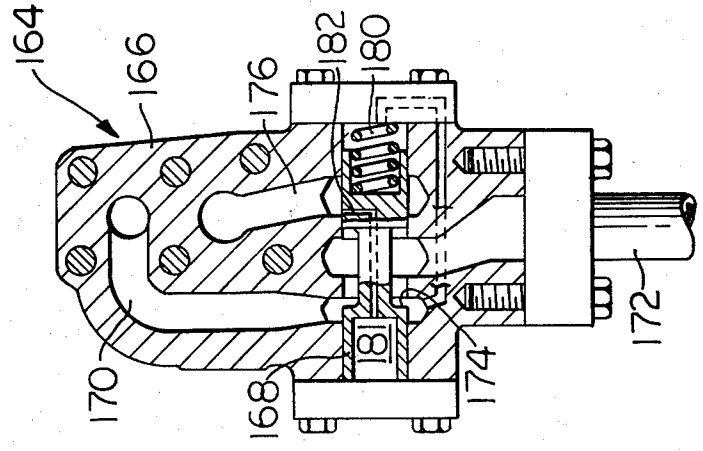
164
166
176
182
180
172
181
170
168
174

Fig. 7

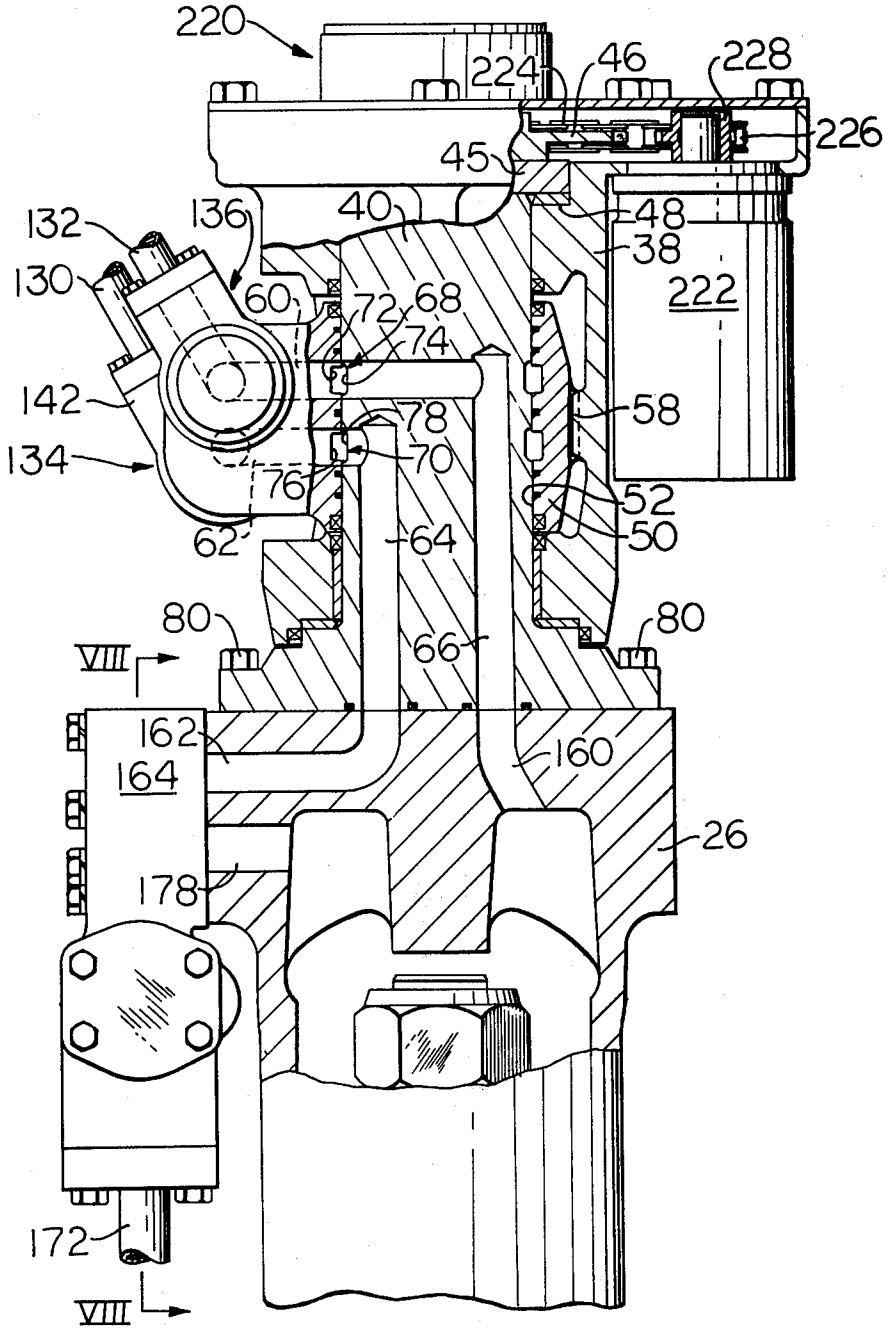
220
224
46
228
226
45
40
48
38
222
132
136
130
60
72
68
74
142
78
58
134
70
76
52
50
62
64
80
80
66
VIII
162
164
160
26
178
172
VIII

CLAMSHELL BUCKET ASSEMBLY AND VALVE MEANS ASSOCIATED THEREWITH

This is a division of Ser. No. **283,818,** filed Aug. **25, 1972,** now U.S. Pat. No. **3,873,133.**

BACKGROUND OF THE INVENTION

This invention relates to bucket assemblies, and more particularly, to a bucket assembly which is freely pivotable through **360°**

In general, excavators which provide as part of a bucket assembly a cylinder-operated bucket are well known. In such systems, application of fluid pressure to one or the other end of the cylinder opens and closes the jaws of the bucket. With the realization of the advantage of pivoting the bucket about a vertical axis, such advantage being well known, various means have been employed for allowing such pivoting. See, for example, U.S. Pat. No. **2,725,996** to Britton, U.S. Pat. No. **2,837,846** to Long, U.S. Pat. No. **3,330,056** to Woodside et al, U.S. Pat. No. **3,413,029** to Donovan, U.S. Pat. No. **3,451,150** to Pitaval, U.S. Pat. No. **3,462,029** to Mork, U.S. Pat. No. **3,493,135** to Novotny, U.S. Pat. No. **3,510,018** to Mork et al, and U.S. Pat. No. **3,517,960** to Mork et al. The designs disclosed in U.S. Pat. Nos. **2,725,996** (Britton), **2,837,846** (Long), **3,330,056** (Woodside et al), **3,462,029** (Mork), **3,493,135** (Novotny), **3,510,018** (Mork et al), and **3,517,960** (Mork et al), however, cannot be said to allow free pivoting of the bucket since, in each case, the body of the cylinder and the hoses attached thereto (for supplying pressurized fluid to the cylinder) rotate with the bucket. The hoses, of course, by their very nature, do not allow free rotation of the bucket.

U.S. Pat. Nos. **3,413,029** to Donovan and **3,451,150** to Pitaval do provide means where such hoses do not interfere with such pivoting. However, in the Donovan apparatus, the means provided, being positioned adjacent the cylinder area of the apparatus, are not conveniently associated with the cylinders provided, but must communicate therewith through a plurality of hoses. And the device of Pitaval depends on pivoting of the piston within a cylinder, with the sealing problems attendant thereto.

In addition, of course, it sometimes is necessary to move or pivot to an extent the complete bucket assembly, as contrasted with the bucket itself. In such case, even though it is desirable to provide that the hoses are free of the pivoting of the bucket, they may well be designed to move with the whole bucket assembly. In such case, it would be desirable to allow a certain degree of pivoting of the hose ends relative to the bucket assembly as a whole.

Furthermore, such movement of the bucket assembly is generally relative to the arm which is part of the excavating machine and which supports the complete bucket assembly. Such movement may in some cases bring the bucket assembly quite close to or in contact with the arm, with possible damage to the assembly. It would be advantageous, therefore, to provide safety means for preventing such damage.

In the past, it has also been found desirable to open the jaws of the bucket as quickly as possible. Achieving the response desired has been in the past difficult because of the relatively great bulk of the jaws. It would certainly be advantageous to provide means for opening the jaws in an extremely rapid manner, meanwhile

with such means being extremely simple and effective, without the necessity of complicated external hoses and the like.

In addition to the quick-opening feature, positive stop means associated only with the jaws of the bucket for determining the fully opened position would be advantageous. This would protect from damage the cylinder structure and linkages used for opening and closing the jaws. In combination with the quick-opening feature, such stop means for determining the fully opened position would come into play quite suddenly, providing the advantage of aiding in the cleaning of the jaws upon such opening thereof.

While additional U.S. Pat. Nos. **2,188,672** to Atkinson and **2,605,563** to Browning may be of general interest in these contexts, a study of them reveals that they do not add anything pertinent to this subject matter.

SUMMARY OF THE INVENTION

It is therefore an object of this invention to provide, in an excavating machine having an arm which supports a bucket assembly including a cylinder, means which insure that the bucket is freely pivotable through **360°** without the cylinder hoses thereof hindering such pivoting, the means for allowing such pivoting being simple in design and efficient in use.

It is a further object of this invention to provide, in an excavating machine, means which, while fulfilling the above object, provide that the hoses for providing fluid pressure to the cylinder are pivotable to an extent relative to the bucket assembly.

It is a still further object of this invention to provide, in an excavating machine, means which, while fulfilling the above objects, provide that movement between the arm and bucket assembly does not damage the bucket assembly.

It is a still further object of this invention to provide, in an excavating machine, means which, while fulfilling the above objects, open the jaws of the bucket as quickly as possible.

It is a still further object of this invention to provide, in an excavating machine, means which, while fulfilling the above objects, provide stop means for determining the fully opened position of the jaws.

Broadly stated, disclosed herein is a joint assembly comprising a tubular member generally fixed in position and defining a longitudinal bore and a lateral tubular member passage through the body thereof. A longitudinal shaft is disposed within the bore of the tubular member with the outer surface thereof in intimate relation with the inner surface of the tubular member, and rotatable about its longitudinal axis within the tubular member, and defining through the shaft body a shaft passage. An annular passage is defined between the inner surface of the tubular member and the outer surface of the shaft, providing continuous communication therethrough of the tubular member passage and the shaft passage, irrespective of the rotative position of the shaft relative to the tubular member. In addition, there is further included a hose defining an internal passage, and a coupling interconnecting the hose end and the tubular member, said coupling comprising means for providing a degree of movement of the hose end relative to the tubular member, meanwhile providing continuous communication of the hose internal passage with the tubular member passage.

In combination with a fluid pressure source actuating a cylinder the rod of which is movable to first and second positions by application of fluid under pressure to one and the other end of the cylinder, means are included for selectively applying fluid pressure from the source to the one end of the cylinder. Valve means are provided for directing fluid pressure from the source to the other end of the cylinder, the valve means cutting off fluid pressure to the other end of the cylinder upon application of fluid pressure to the one end of the cylinder at substantially the same time as such application of fluid pressure to the one end of the cylinder, and allowing communication between the other end of the cylinder and the one end of the cylinder so that the fluid flow from the other end of the cylinder aids the fluid flow directed to the one end of the cylinder.

In apparatus including a bucket comprising a pair of openable and closable jaws, and means for opening and closing the jaws, stop means are associated with the jaws, said stop means comprising a pair of stop members, one associated with each jaw, the stop members being positioned to contact each other to limit the opening movement of the jaws.

In apparatus including an arm, an implement and means pivotally attached to the arm and interconnecting the arms and the implement to support the implement, cushion stop means are associated with the arm and means pivotally attached to the arm for limiting the pivoting of the means pivotally attached to the arm in the direction of the arm.

BRIEF DESCRIPTION OF THE DRAWINGS

These and other objects of the invention will become apparent from a study of the following specification and drawings, in which:

FIG. 1 is a side elevational view of a hydraulic excavating machine with the clamshell bucket assembly attached to the end of a stick arm;

FIG. 2 is an enlarged side elevational view of the clamshell bucket assembly with the bucket in the closed position;

FIG. 3 is an enlarged front elevational view of the clamshell bucket assembly;

FIG. 4 is an enlarged side elevational view of the clamshell bucket assembly with the bucket in a fully opened position;

FIG. 5 is an enlarged side view, partially in section, of the upper portion of the clamshell bucket assembly, and showing the hydraulic change valve and details of the swivel joint;

FIG. 6 is a cross-sectional view of the swivel joint taken along the line VI—VI of FIG. 5;

FIG. 7 is a cross-sectional side view of the swivel joint and the outer portion of the hydraulic cylinder and further showing the hydraulic change valve; and,

FIG. 8 is a cross-sectional view of the hydraulic quick change valve taken along the line VIII—VIII of FIG. 7.

DESCRIPTION OF THE PREFERRED EMBODIMENT

Referring to FIG. 1, a clamshell bucket assembly, designated generally by the reference numeral 10, is shown attached to the end of a stick arm 12 of an excavating machine 14. The stick arm 12 is fastened to the end of a boom 16, and the movement of the stick arm 12 is controlled by a hydraulic cylinder 18 carried on boom 16. Movement of the boom 16 is controlled by a pair of hydraulic cylinders, one of which is shown at 20. The assembly 10 is shown in larger detail in FIGS. 2–4. Such assembly 10 includes a trunnion support assembly 22, a swivel joint assembly 24, a hydraulic cylinder 26, and an implement, bucket 28. Trunnion assembly 22 is pivotally fastened to stick arm 12 by means of pin 30, and the swivel joint assembly 24 is pivotally mounted to trunnion assembly 22 by means of pin and plate assemblies 32, 34 which fasten to the swivel joint assembly 24 by means of a plurality of capscrews 36. The pivotal planes determined by pin 30, and pin and plate assemblies 32, 34, it should be noticed, are perpendicular. The particular construction of pin and plate assemblies 32, 34 can be seen in FIGS. 5 and 6.

The swivel joint assembly 24 is shown in detail in FIGS. 5, 6 and 7. As shown therein, pin and plate assemblies 32, 34 support a fixed joint frame 38, A longitudinal shaft 40 is disposed within the frame 38, the upper end of the shaft 40 having a stepped portion 42 on which is fixed, by means of nut 44, a support plate 45 and a sprocket 46. The frame 38 defines an annular shoulder 48 which is adapted to position the shaft 40 and support the entire weight of the shaft 40.

Disposed within the frame 38 is a tubular member 50, which defines a longitudinal bore 52. The shaft 40 is disposed within the bore 52 of the tubular member 50 with the outer surface thereof in intimate relation with the inner surface of the tubular member 50. The shaft 40 is rotatable about its longitudinal axis within the tubular member 50.

The frame 38 is disposed on either end of the tubular member 50 in spaced relation with said ends. The rotative movement of the tubular member 50 about its axis relative to the frame 38 is limited by means shown in FIG. 6. A pair of external longitudinal ears 54, 56 are defined by the tubular member 50, parallel to the longitudinal axis of the shaft 40, and an internal longitudinal rib 58 is defined by the frame 38, parallel to the longitudinal axis of the shaft 40, and disposed between the ears 54, 56. Through such means, tubular member 50 is allowed a degree of movement along the longitudinal axis of the shaft 40 and relative to the shaft 40, but the rotative movement of the tubular member 50 about its axis relative to the frame 38 is limited by ears 54, 56 and rib 58. Consequently, the tubular member 50 is generally fixed in position relative to the frame 38. It will also be seen that with tubular member 50 being "free floating," none of the weight of the shaft 40 or any of the weight fixed to shaft 40 is supported by tubular member 50, but is totally supported, as described above, by frame 38.

As best shown in FIG. 7, tubular member 50 defines lateral passages 60, 62 through the body thereof, and shaft 40 defines shaft passages 64, 66. Annular passages 68, 70 are each defined between the inner surface of the tubular member 50 and the outer surface of the shaft 40. Passages 68, 70 are disposed in planes generally perpendicular to the longitudinal axis of the shaft 40.

Passage 68 is made up of (i) annular channel 72 formed in the inner surface of the tubular member 50, and (ii) annular channel 74 formed in the outer surface of the shaft 40. Likewise, passage 70 is made up of (i) annular channel 76 formed in the inner surface of the tubular member 50, and (ii) annular channel 78 formed in the outer surface of shaft 40. Passage 60 communicates with channel 72, and passage 66 com-

municates with channel **74**, so that communication is provided between passages **60, 66** through annular passage **68**. Likewise, passage **62** communicates with channel **76**, and passage **64** communicates with channel **78**, so that communication is provided between passages **62, 64** through annular passage **70**. It will be seen that such communication between passages **62, 64**, and between passages **60, 66**, is provided continuously, irrespective of the rotative position of the shaft **40** relative to the tubular member **50**.

Fixed to the bottom portion of shaft **40** by means of bolts **80** is hydraulic cylinder **26**, as shown in FIG. **7**. Suspended from the top of cylinder **26** by means of vertical links **82, 84**, are jaws **86, 88** which make up the bucket **28** (FIGS. **2–5**). The ends of the links **82, 84** are pivotally mounted to the top of cylinder **26**.

Cross tubes **90, 92** extend across the jaws **86, 88** respectively, and are fixed thereto (FIGS. **2** and **3**). Link **82** extends downwardly from the top of cylinder **26** to end in bracket portions **94, 96**. Bracket portion **94** is disposed between a pair of brackets **98, 100** welded to cross tube **90**, and is held there by a pin **102**. Bracket portion **96** is disposed between a pair of brackets **104**, 106 welded to cross tube **90**, and is held there by a pin **108**. A pin **110** passes through eye member **112** of piston rod **114** of cylinder **26**, and through brackets **98**, 104 as shown. End brackets **116, 118** are fixed to cross tube **90** adjacent its ends, and pin assemblies **120, 122** fasten end brackekts **116, 118** to jaw **86**. Like brackets are provided on cross tube **92** of jaw **88** and are similarly associated with the piston rod **114** of the cylinder **26**. End brackets **124, 126** are fixed to cross tube **92** adjacent its ends and are pinned to end brackets **116**, 118 respectively by means of pin assemblies **120, 122**.

It will be seen that, as the piston rod **114** is moved outwardly of cylinder **26**, or downwardly as shown in FIGS. **2, 3** and **4**, the cross tubes **90, 92**, and jaws **86**, 88 pivot about pin assemblies **120, 122** to open as shown in FIG. **4**. It will be seen that, because of this particular linking system, the links **82, 84** are nearly parallel to the cylinder **26** and piston rod **114** when jaws **86, 88** are open. This arrangement of links and pins is such to provide suitable distribution of force throughout bucket closing cycle. Since the links **82, 84** are in such position nearly parallel to the cylinder **26** and piston rod **114**, the chance of bending the cylinder **26** and links **82, 84** is reduced to a minimum.

It is to be noted that the entire weight of the bucket **28** is supported by shaft **40**, and that tubular member **50** does not support any of this load.

Hoses **130, 132** are associated with the tubular member **50**, as best shown in FIGS. **6** and **7**. The hoses **130**, 132 each define an internal passage, and are associated with the tubular member by coupling means **134, 136**. Since the coupling means **134, 136** of hoses **130, 132** are identical, only one will be described in detail.

A bolt **138** is threadably connected to tubular member **50** and defines a longitudinal internal passage **140** which communicates with passage **62** of tubular member **50**. A tubular coupling body **142** is disposed about the bolt **138** with the inner surface of the body **142** in intimate relation with the outer surface of the bolt **138**. A tubular body **142** defines a lateral body passage **144**, the hose **130** end being fixed to the tubular body **142** to provide communication between the internal passage of the hose **130** and the tubular body passage **144**. An annular open path **146** is defined between the inner surface of the tubular body **142** and the outer surface of the bolt **138**, providing continuous communication therethrough of the tubular coupling body passage **144** and bolt passage **140**, through a plurality of radial bolt passages **148**. Meanwhile, a degree of movement of the tubular body **142**, and the hose **130** fixed thereto, is allowed, about the longitudinal axis of the bolt **138**, but still allowing such continuous communication. Such annular path **146** comprises an annular groove **150** formed in the inner surface of the tubular body **142**.

Passage **66** communicates directly with a passage **160** in the head of cylinder **26** (FIG. **7**), whereby passage **66** communicates directly with the head end of the cylinder **26**. However, passage **64** communicates with a passage **162** in the body of the cylinder **36**, which in turn communicates with valve means **164**, which will now be described in detail. The valve means **164** are fixed to the head end of the cylinder **26**, as shown in FIG. **7**. The valve means **164** comprise a valving body **166**. **166** a valving spool **168** associated therewith (FIG. **8**). The valving body **166** defines a passage **170** which communicates with passage **162** and leads to valving spool **168**. The valving spool **168** is shown in its first position in FIG. **8**, which allows communication of passage **170** with a pipe **172** through a stepped portion **174** of valving spool **168**. Pipe **172** communicates with the other, or rod end of the cylinder **26**. However, movement of the valving spool **168** to the right to its second position will block off the passage **170**, but open up the pipe **172** to a passage **176**, also defined by valving body **166**, which communicates with the head end of cylinder **26** through a passage **178**. Resilient biasing means, comprising a helical spring **180**, interposed between the valving spool **168** and valving body **166**, bias the valving spool **168** in its first position.

In the operation of the system, pressure sources (not shown) are connected to hoses **130, 132**. Assuming that the bucket **28** is opened, i.e., the jaws **86, 88** are apart, fluid pressure is applied to hose **130**, through passages **62, 70, 64, 162, 170** and into hose **172**, to act on the rod end of cylinder **26**. Valving spool **168**, being biased into the position shown in FIG. **8**, allows such communication, but blocks off passage **176** from this pressure. Such pressure on the rod end of cylinder **26** raises the piston rod **114**, closing the jaws **86, 88** as previously described. To open the jaws **86, 88**, fluid pressure is applied to hose **132**, through passages **60, 68**, 66, 160 to the head end of the cylinder **26**. The fluid pressure in the head end of cylinder **26** is also present in passage **178**, and passage **176** of valve means **164**. Such pressure is transferred into a pilot pressure chamber **181** by means of a pilot pressure passage **182** in valving spool **168**, to shift the valving spool **168** rightward against the force of spring **180**, closing off communication between pipe **172** and passage **170**, and allowing communication between pipe **172** and passage **176**, i.e., between the rod end of cylinder **26** and the head end thereof. As fluid enters the head end of cylinder **26**, fluid is expelled from the rod end and flows into pipe **172** and passage **176**. This fluid then flows across the stepped portion **174** of valving spool **168**, and into the head end of cylinder **26** by way of passage **178**. In this manner, the fluid being expelled from the rod end of the cylinder **26** is added to the pressurized fluid being introduced into the head end of cylinder **26** through passage **160**, which establishes a supercharged condition in the head end of the cylinder **26**.

This condition forces the piston rod **114** out of the cylinder **26** very rapidly, and thereby opens the bucket **28** in an extremely short period of time. Under actual test it has been found that the bucket **28** can be opened in approximately ⅔ of a second in this manner.

The spring **180** will shift the valving spool **168** back to its rest position as soon as pressure in the head end of cylinder **26** and passages **176** and **178** is relieved. Since the valving means **164** are connected directly to the top portion of cylinder **26,** response to the increased volume of fluid into the cylinder **26** is extremely rapid and no additional lines or hoses are needed.

It should be noticed that, while such operations are going on, the bucket **28,** through the pivoting of shaft **40,** is freely pivotable through **360°** without the hindrance of hoses, etc. This is because of the novel swivel joint assembly **24** system described above. In addition, the coupling means **134, 136,** provide a degree of pivoting of hoses **130, 132** relative to the swivel joint assembly **24** itself, allowing for even freer and more convenient use of the apparatus.

As shown in FIGS. **2** and **4,** stop means, comprising stop members **200, 202** are associated with jaws **86, 88,** respectively. Stop members **200, 202** are positioned to contact each other to limit the opening movement of the jaws **86, 88** (FIG. **4**). The stop members **200, 202** actually comprise extended portions of jaws **86, 88** respectively, with end portions that define flat surfaces **204, 206** which contact each other across the full flat surface of each to limit opening movement of the jaws **86, 88.** Such positive stop means serve also to protect the links **82, 84** and cylinder **26** and piston rod **114** thereof, since there is no danger of the jaws **86, 88** contacting them upon the sudden opening of the jaws **86,** 88.

Such positive stop means have the additional advantage that, in combination with the quick opening provided by the valve means **164,** the sudden positive stop of the opening jaws **86, 88** acts to clean the jaws **86, 88,** resulting in more efficient use.

A cushioned stop **210** is fixed to the trunnion support assembly **22,** as best shown in FIGS. **2, 4** and **5.** The cushioned stop **210** is positioned to contact the stick arm **12** if the bucket assembly **10** should pendulate in a wide arc toward the stick arm **12** (FIG. **2**). In such situations, the cushioned stop **210** would absorb the force of the bucket assembly **10,** and prevent it from striking the stick arm **12.**

With particular reference to FIGS. **5** and **7** of the drawings, an optional bucket rotating assembly **220** is shown for providing powered rotation of the bucket assembly **10.** The powered rotating assembly **220** includes a hydraulic motor **222,** sprocket **46,** and a chain **224.** A sprocket **226** secured to the shaft **228** of the hydraulic motor **222** drives the chain **224** and thereby rotates the sprocket **46.** The sprocket **46** is secured to the stepped portion **42** of shaft **40** by a key **230.** It can be seen therefore that rotation of the sprocket **46** by the chain **224** will cause shaft **40** of the swivel joint assembly **24** to rotate also. Thus, the entire bucket assembly **10** below the joint frame **38** rotates with shaft **40.** Even without the powered rotating assembly **220,** the entire bucket assembly **10** can be rotated by hand in view of the construction of the swivel joint assembly **24.**

What is claimed is:

1. A joint assembly comprising: a tubular member generally fixed in position and defining a longitudinal bore and a lateral tubular member passage through the body thereof; a longitudinal shaft disposed within the bore of the tubular member with the outer surface thereof in intimate relation with the inner surface of the tubular member and rotatable about its longitudinal axis within the tubular member, and defining through the shaft body a shaft passage; and, an annular passage defined between the inner surface of the tubular member and the outer surface of the shaft, providing continuous communication therethrough of the tubular member passage and the shaft passage, irrespective of the rotative position of the shaft relative to the tubular member, wherein the tubular member defines through the tubular member body thereof a second lateral tubular member passage, the shaft defining through the shaft body thereof a second shaft passage, and further comprising a second annular passage defined between the inner surface of the tubular member and the outer surface of the shaft, providing continuous communication therethrough of the second tubular member passage and second shaft passage, irrespective of the rotative position of the shaft relative to the tubular member, wherein the first-mentioned and second annular passages are each disposed in planes generally perpendicular to the longitudinal axis of the shaft, wherein are further included a fixed frame associated with the joint assembly for generally fixing the tubular member in position relative to the frame, wherein the first and second annular passages comprise annular channels formed in the inner surface of the tubular member, wherein the first and second annular passages further comprise annular channels formed in the outer surface of the shaft, wherein the frame is disposed on either end of the tubular member to allow a degree of movement of the tubular member along the longitudinal axis of the shaft, and relative to the shaft, and further including means for limiting rotative movement of the tubular member about its axis relative to the frame, meanwhile allowing said degree of movement of the tubular member along the longitudinal axis of the shaft and relative to the shaft, wherein the frame is configured to position the shaft therein and to totally support the weight of the shaft, with none of the weight of the shaft being supported by the tubular member, wherein the means for limiting rotative movement of the tubular member about its axis relative to the frame, meanwhile allowing a degree of movement of the tubular member along the longitudinal axis of the shaft and relative to the shaft, comprise a pair of external longitudinal ears defined by the tubular member, parallel to the longitudinal axis of the shaft, and an internal longitudinal rib defined by the frame and parallel to the longitudinal axis of the shaft, and disposed between the ears, and further including a cylinder downwardly extending from and supported by the shaft, and a bucket comprising a pair of downwardly extending openable and closable jaws associated with the shaft and supported thereby, a cylinder having a rod movable to a first position by means of fluid pressure applied to one end thereof to open the jaws, and movable to a second position by means of fluid pressure applied to the other end thereof to close the jaws, a source of fluid pressure associated with the tubular member for selectively applying said fluid pressure (i) through the first-mentioned tubular member passage, first annular passage, and

first-mentioned shaft passage to the one end of the cylinder, and (ii) through the second tubular member passage, second annular passage, and second shaft passage, and valve means interconnecting the second shaft passage with the other end of the cylinder and adapted to allow direction of fluid pressure from the second shaft passage to the other end of the cylinder, the valve means cutting off fluid pressure to the other end of the cylinder upon application of fluid pressure to the one end of the cylinder at substantially the same time as such application of fluid pressure to the one end of the cylinder, and allowing communication between the other end of the cylinder and the one end of the cylinder, so that the fluid flow in the other end of the cylinder aids the fluid flow directed to the one end of the cylinder in opening the jaws of the bucket.

2. The joint assembly of claim **1** wherein said valve means comprise a valving body and a valving spool associated therewith, and movable to a first position to allow direction of fluid pressure from the fluid pressure source to the other end of the cylinder, and movable to a second position to cut off fluid pressure from the fluid pressure source to the other end of the cylinder, and allow communication between the other end of the cylinder and the one end of the cylinder.

3. The joint assembly of claim **2** and further comprising means for resiliently biasing the valving spool in its first position, and means for moving the valving spool against the resilient biasing means to its second position.

4. The joint assembly according to claim **3** wherein the means for moving the valving spool against the resilient biasing means to its second position comprise fluid pressure directed from the one end of the cylinder to the valving spool.

5. The joint assembly according to claim **4** wherein the resilient biasing means comprise a helical spring interposed between the valving spool and valve body.

6. The joint assembly according to claim **5** wherein the valve means are fixed to the one end of the cylinder.

* * * * *