July 25, 1950 A. M. TOWE 2,516,275

SWING

Filed Jan. 3, 1946 3 Sheets-Sheet 1

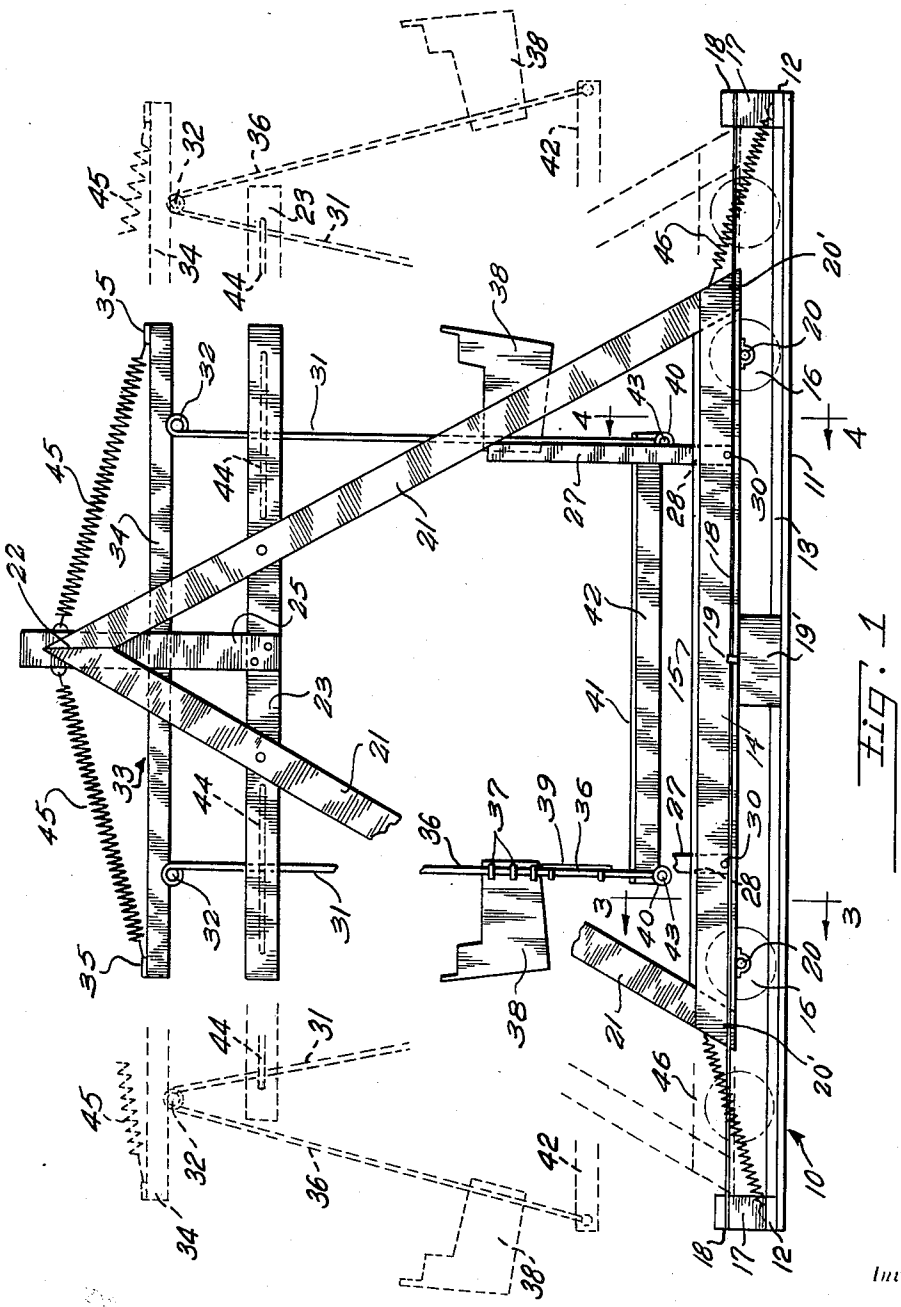

Fig. 1

Inventor

AMOS M. TOWE

By Clarence A. O'Brien and Harvey B. Jacobson

Attorneys

July 25, 1950 A. M. TOWE 2,516,275

SWING

Filed Jan. 3, 1946 3 Sheets-Sheet 2

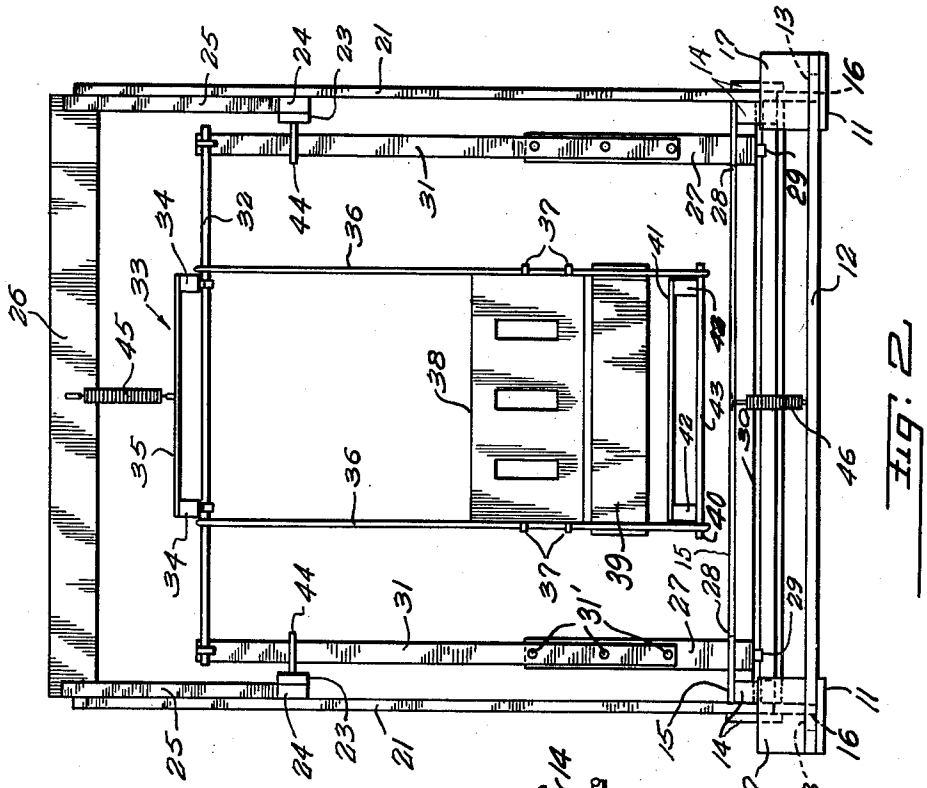

Fig. 2

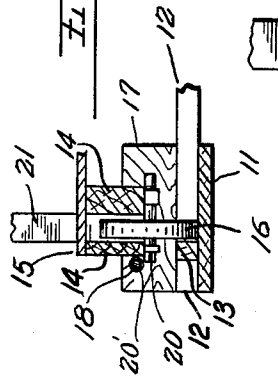

Fig. 3

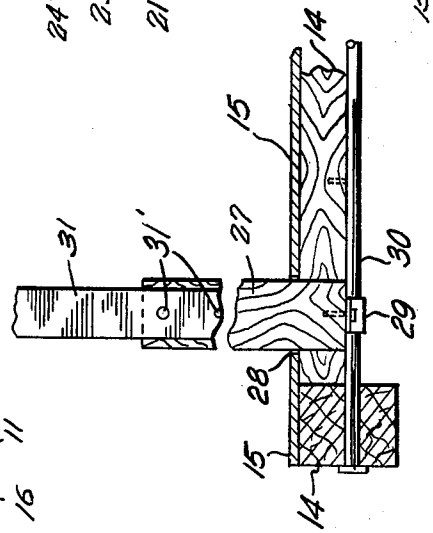

Fig. 4

Inventor

Amos M. Towe

By Clarence A. O'Brien and Harvey B. Jacobson

Attorneys

July 25, 1950 A. M. TOWE 2,516,275

SWING

Filed Jan. 3, 1946 3 Sheets-Sheet 3

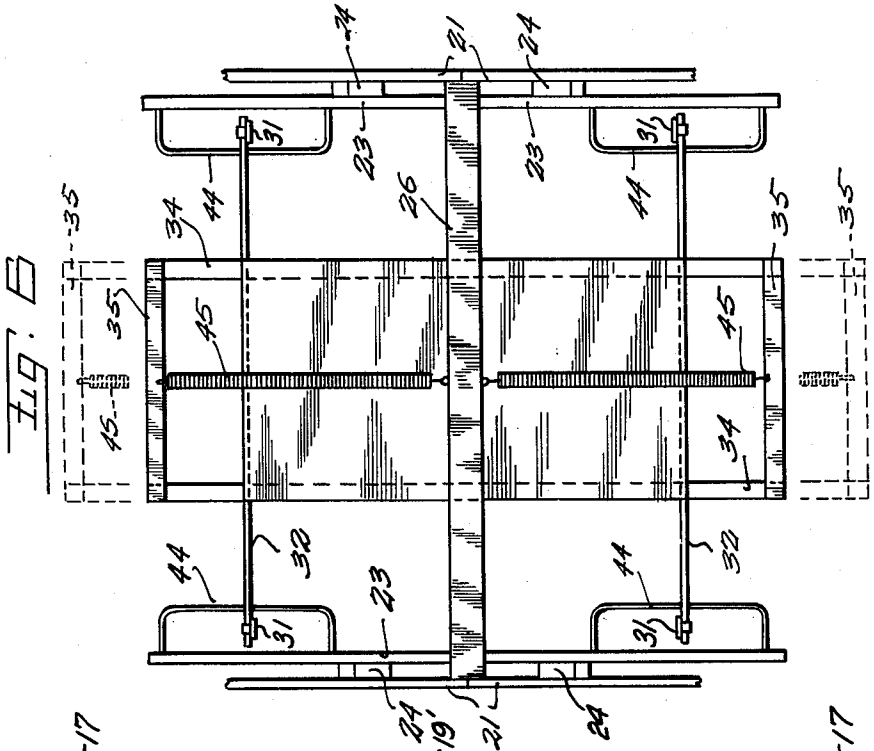

Fig. 6

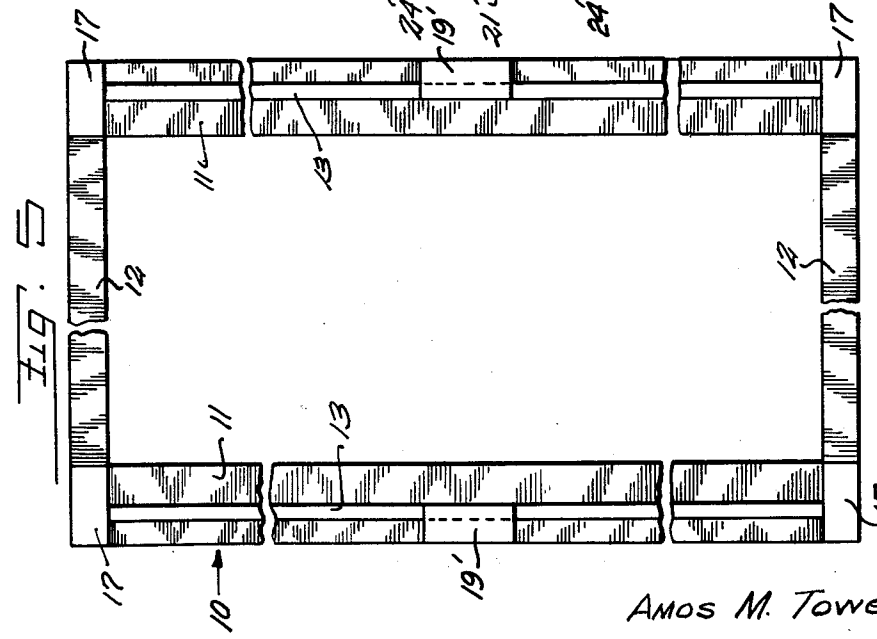

Fig. 5

Inventor

AMOS M. TOWE

By Clarence A. O'Brien and Harvey B. Jacobson

Attorneys

Patented July 25, 1950

2,516,275

UNITED STATES PATENT OFFICE

2,516,275

SWING

Amos M. Towe, Dayton, Ohio

Application January 3, 1946, Serial No. 638,824

9 Claims. (Cl. 155—60)

1

My invention relates to lawn swings of the type by having two seats opposing each other in opposite directions and adapted to be operated or swung back and forth from a superstructure, except that in the present invention, the seats are hung to swing in unison with a floor board there beneath, the suspension being from the upper ends of uprights pivotally mounted at their lower ends on a carriage adapted to roll back and forth on trackways supporting the entire structure with a rolling or gliding motion of the carriage and slightly pitching movement of the uprights and connected seats suspended thereby at the limits of the movements of the uprights in either direction, while means are provided tending to yieldingly return and hold the superstructure and carriage in normally centralized position but adapted to permit of their swinging and rolling movements back and forth in either direction.

It is also an object of the invention to provide a swing in which the superstructure, seats suspended therefrom to swing back and forth and floorboard connecting the same are suspended from the upper ends of flexible uprights pivotally supported at their lower ends, while means is provided for engagement by said uprights to limit the swinging movement thereof in either direction and by engagement of the uprights therewith, to cause flexing of the uprights whereby a slight pitching movement is imparted to the suspended seats, to render the swinging action more zestful, interesting and enjoyable, while at the same time requiring less effort on the part of the occupant in propelling the swing seats alternately back and forth by alternately shoving or pressing with the feet on the floorboard.

Another object of the invention is to provide a swing in which the swinging movements are not only from the top as with the conventional lawn swing, but also upon fulcrums at both the top and bottom, giving a relatively double action swinging movement in addition to the pitching movement above referred to, and which can be manufactured and sold with the additional advantages and features set forth, at a price not appreciably above the cost of the ordinary lawn swing.

Other objects and advantages reside in the details of construction and operation as more fully hereinafter described and claimed, reference being had to the accompanying drawings forming part hereof, wherein like numerals refer to like parts throughout, and in which:

Figure 1 is a side elevation of a lawn swing

2

constructed in accordance with the invention and shown in its normal position in full lines, and in positions at either end of its swing in opposite directions, in dotted lines, as well as showing the rolling movement of the carriage upon the tracks.

Figure 2 is an end elevation of the swing.

Figure 3 is a fragmentary detail vertical sectional view showing the manner of supporting the swing and its carriage upon the trackway.

Figure 4 is an enlarged detail fragmentary transverse sectional view showing the manner of supporting the resilient uprights from which the swing seats and footboard are suspended.

Figure 5 is a plan view of the trackway, and

Figure 6 is a fragmentary top plan view of the swing with the ends of the carriage and trackway omitted to show the uprights supporting the superstructure at their upper ends and from which the seats are supported together with the means for limiting the back and forth swinging motions and causing slight pitching movement thereof.

Referring to the drawings in detail, the swing is shown as comprising a base frame or trackway 10 of rectangular outline having parallel side rail 11 connected at the ends by cross-members 12 and bearing longitudinal parallel tracks or rails 13. A carriage or supplemental base 14 also comprising a rectangular frame consisting of parallel side bars and cross bars connecting the same and having a flooring 15 disposed on and connecting the side bars, is adapted to roll back and forth within the trackway upon the runways formed by the members 11 by means of wheels 16 which are guided in their movements and prevented from becoming displaced from the runways, by longitudinal parallel guard rails formed by the tracks or rails 13 and from running off the trackway at either end of the runways, by transverse bumpers 17 at the ends of the runways on the cross-members 12 by extension above the same. The carriage may be guided in its movements back and forth on the runways and prevented from flying up or jumping the tracks or guard rails, by means of rods or cables 18 running longitudinally over the runways between the bumpers 17 to which the ends thereof are anchored and centrally anchored to the base frame or platform by blocks 19' as indicated at 19 on each side. The outer ends of the wheel axles 20 engage under the rods or cables 18 and loops 20' on each side of the swing carriage 14 at each outside corner also engage or encircle rods or cables 18 to prevent upward

displacement of the carriage to keep same from jumping the tracks or getting out of line. A frame structure is supported on the carriage 14 and includes oppositely inclined standards 21 connected to the side bars of the carriage 14 in slots at the ends thereof and abutting each other at their upper beveled ends, as indicated at 22. These standards support parallel horizontal side bars 23 bolted at the inside of the standards 21 in spaced relation thereto through interposed spacers 24 and having their ends terminating short of the ends of the base frame and runways or tracks, as well as slightly short of the ends of the carriage 14. These horizontal members or bars 23 have uprights 25 connected thereto at their outer sides, and intermediately of the ends thereof in the space provided by the spacing blocks 24 between standards 21 and bars 23 and extend upwardly, where they are secured to the upper abutting ends of the standards 21 and extend slightly above the same where they are connected by a cross-beam or bar 26 bracing the structure transversely.

Instead of supporting the seats and floorboard from the top of the frame as in the conventional swing, they are supported by a pair of uprights 27 at each side which have their lower extremities extending through openings 28 in the flooring 15 of the carriage 14 and fixed as at 29 to transverse pivot rods 30 mounted in the side bars or rails of the carriage 14, so that all of the uprights 27 will move in unison. The upper portions of the uprights 27 consist of spring steel strips 31 attached at their lower portions to uprights 27 as at 31' and connected or pivoted at their upper ends in pairs at each end of the seat structure or swing proper by cross rods 32 on which the super-structure 33 rests, and from which the swing proper is suspended. This super-structure consists of a rectangular frame including side bars 34 secured or pivoted to the cross-rods 32 and connected by cross-members 35 at the ends of the side bars 34.

Hangers 36 are suspended from the cross-rods 32, there being a pair suspended from each rod and rigidly secured at their lower ends, as at 37, to the sides of seats 38 provided with depending front panels 39 secured to hangers 36. The lower ends of the hangers 36 are pivotally connected to the swing proper or seat structure as at 40 beneath the ends of a floorboard or platform 41 and more particularly side rails 42 thereof on transverse pivot rods 43 extending between and connecting the hangers 36 and side rails 42 at each end of the floor board 41 and beneath the seats 38 which also connect the hangers. Thus, in addition to the seats and floorboard swinging from the top by means of the suspended hangers 36 with the top of the super-structure forming a support for a roof or canopy thereover, they and the super-structure are also adapted to swing with the hangers 36 and slide back and forth with the carriage 14 and uprights 27, which latter are limited in their sliding movements back and forth with carriage 14 and swinging movements back and forth due to the flexing of the portions 31 within and by the ends of the guards or guide loops 44 horizontally attached to the horizontal side bars 23 adjacent to the ends thereof, so that at the limit of the flexing and swing of the uprights 27 in either direction, the uprights at flexible spring portions 31, will strike the ends of the loops 44 below the upper end of the spring steel strips 31 and cause a whipping or pitching movement thereof for a slight distance, due to the flexing of the resilient strips 31 of the uprights 27 and add an additional zestful and enjoyable movement to the swing and the occupants of the seats thereof. This operation is effected in the usual manner of operating a lawn swing by alternately shoving or pressing with the feet on the floorboard 41, to cause the same to swing back and forth. In addition, when this motion is accelerated, the super-structure will also swing or move back and forth causing or assisted by the action of stretching and retracting springs or other elastic members 45 connecting the cross members or bars 35 with the cross beam or bar 26 alternately contracting or compressing at one side and expanding at the other side. The pitching effect comes when the uprights 27 supporting the superstructure, reach the end of their movements at the resilient or flexible strips 31 and strike the ends of the guide loops or guards 44 which also serve to guide the uprights in their movements. Moreover, when the swing begins to move back and forth, hangers 36 of the floor board and seat structure start the superstructure to which the uprights 27 are attached at their upper ends to move back and forth, and since the seats are suspended or hung from this superstructure, as the motion is accelerated, by reason of the throw in either direction, the thrust and weight thereof will cause the carriage 14 to move or roll back and forth at the wheels 16 upon the trackway to the ends of the runways or in close proximity thereto. If the carriage should run to the ends of the trackway, it will strike the bumpers 17 which limit the movements of the carriage and then from this position, the carriage will move with the swing of the swing proper consisting of the seats and floorboard, in the opposite direction. This movement is effected by the movements of the swing proper and uprights, causing the stretching and retracting action of springs or outer resilient members 46, connected intermediately of the widths of the carriage 14 to the ends thereof and to the cross-rails or members 12 of the supporting base and trackway which alternately contract and expand or stretch, as the carriage and swing supported thereby move back and forth. This gives an additional enjoyable motion to the swing not possible in any prior swing of this character. At the same time, in addition the bumpers 17 limit the movements at either end of the motion of the carriage, in moving back and forth. The rods or cables 18 by reason of the engagement of projecting means on the carriage, such as the axles or shafts 20, therebeneath for sliding motion thereunder, and loops 20' engaged around or encircling the rods or cables 18, will prevent upward displacement of the swing and carriage to keep the swing structure from flying up or jumping the tracks.

In view of the foregoing description taken in conjunction with the accompanying drawings it is believed that a clear understanding of the construction, operation and advantages of the device will be quite apparent to those skilled in the art. A more detailed description thereof is accordingly deemed unnecessary.

It is to be understood, however, that even though I have herein shown and described a preferred embodiment of my invention the same is susceptible to certain changes fully comprehended by the spirit of the invention as herein described and the scope of the appended claims.

Having thus described the invention, what I claim is:

1. A swing comprising a base, a frame sup-

ported thereon, flexible uprights fixed to the frame, a superstructure mounted on the upper ends of the uprights and adapted to swing back and forth therewith, hangers suspended from the superstructure, opposed seats carried by the opposed hangers and connections between the lower portions of the hangers.

2. A swing comprising a base, a frame supported thereon, flexible uprights fixed to the frame, a superstructure mounted on the upper ends of the uprights and adapted to swing back and forth therewith, hangers suspended from the superstructure and pivotally connected to the upper ends of the uprights, means for centralizing the superstructure with respect to the frame, opposed seats secured to the hangers and a floorboard connecting the lower ends of the hangers and extending between the seats.

3. A swing comprising a base, an upright frame supported thereon, uprights fixed to the frame and having flexible upper portions, a superstructure mounted on the upper ends of the uprights and adapted to swing back and forth therewith, hangers pivotally suspended from the superstructure, means for centralizing the superstructure with respect to the frame, opposed seats secured to the hangers, a floorboard connecting the lower ends of the hangers and extending between the seats, a carriage adapted to move back and forth on the base to which carriage the frame is anchored, and means to guide the carriage in its movements back and forth.

4. A swing comprising a base, a carriage movable back and forth thereon and a frame supported on the carriage, oscillatable flexible uprights fixed to the carriage, a superstructure mounted on the upper ends of the uprights and adapted to swing back and forth therewith, hangers pivotally suspended from the superstructure, connections between the lower portions of the hangers, and means to guide the carriage in its movements back and forth on the base.

5. A swing comprising a base, an upright frame supported thereon, flexible uprights fixed to the frame, a superstructure mounted on the upper ends of the uprights and adapted to swing back and forth therewith in flexing, hangers suspended from the superstructure, connections between the lower portions of the hangers, said frame including oppositely inclined standards at each side of the base, a cross-member connecting said standards and means on the frame to check the movements of the uprights in either direction to cause flexing thereof.

6. A swing comprising a base, a frame supported thereon, uprights fixed to the frame, a superstructure mounted on the upper ends of the uprights and adapted to swing back and forth therewith, hangers suspended from the superstructure and connected thereto, means for centralizing the superstructure with respect to the frame, opposed seats secured to the hangers and a floorboard connecting the lower ends of the hangers and extending between the seats, said

uprights having resilient upper portions, and means on the frame limiting the movements of the uprights in either direction and adapted to cause flexing of said resilient portions to impart a pitching movement to the hangers and parts carried thereby.

7. A swing comprising a base having guideways, a carriage supported to roll back and forth on the guideways, means between the base and carriage to centralize the movement of the carriage, means to prevent displacement of the carriage from the guideways, means to limit the movement of the carriage in either direction, a frame mounted on the carriage, uprights fixed to the carriage at their lower ends and having resilient upper portions, a superstructure supported on the upper ends of the uprights, means between the frame and the superstructure for centralizing the position thereof, means to cause flexing of the upper portions of the uprights in a direction of movement, hangers suspended from the superstructure, seats supported on the hangers, and a floorboard connecting opposite pairs of hangers between the seats.

8. A swing comprising a base, a frame reciprocally supported thereon, flexible uprights pivoted to the bottom of the frame, a superstructure pivoted on the upper ends of the uprights and adapted to move back and forth therewith, hangers pivotally suspended from the superstructure, opposed seats carried by the opposed hangers, connections between the lower portions of the hangers, and means on the base to limit the reciprocation of the frame thereon.

9. A swing comprising a base, a carriage adapted to move back and forth on the base, means to centralize the carriage on the base, means to limit the movement of the carriage in opposite directions, an upright frame structure supported on the carriage, uprights fixed to the carriage and having flexible upper portions, a superstructure mounted on the upper ends of the uprights and adapted to swing back and forth therewith, means on the frame to engage the uprights to limit the flexing thereof, hangers pivotally suspended from the superstructure to swing back and forth and cause movement of the uprights and carriage back and forth on the base, means for centralizing the superstructure with respect to the frame and carriage, opposed seats supported on the hangers and a connection between the hangers below the seats.

AMOS M. TOWE.

REFERENCES CITED

The following references are of record in the file of this patent:

UNITED STATES PATENTS

Number	Name	Date
678,192	Olson	July 9, 1901
1,646,160	Milan	Oct. 18, 1927
1,956,772	Morton	May 1, 1934