US 20110240323A1

(19) United States

(12) Patent Application Publication

Winkes

(10) Pub. No.: US 2011/0240323 A1

(43) Pub. Date: Oct. 6, 2011

(54) VIBRATORY MECHANISM FOR A PILE DRIVER AND A PILE DRIVER

(75) Inventor: **Jasper Stefan Winkes**, Amsterdam (NL)

(73) Assignee: **Fistuca B.V.**, Amsterdam (NL)

(21) Appl. No.: **13/132,988**

(22) PCT Filed: **Dec. 2, 2009**

(86) PCT No.: **PCT/EP2009/066244**

§ 371 (c)(1), (2), (4) Date: **Jun. 6, 2011**

(30) **Foreign Application Priority Data**

Dec. 4, 2008 (EP) 08170711.9

Publication Classification

(51) **Int. Cl.**

E02D 7/14 (2006.01)

E02D 7/06 (2006.01)

(52) **U.S. Cl.** **173/113**; 173/143

(57) **ABSTRACT**

A vibratory mechanism for a pile driver com-prises a static part and a dynamic part. The dynamic part is movable with respect to the static part. The static part is provided with a drivable crankshaft and the dynamic part comprises a housing and a vibration member. The vibration member is drivably coupled to the crankshaft through a connecting rod and linearly movable with respect to the housing in a direction of vibration. The housing is resiliently coupled to the vibration member.

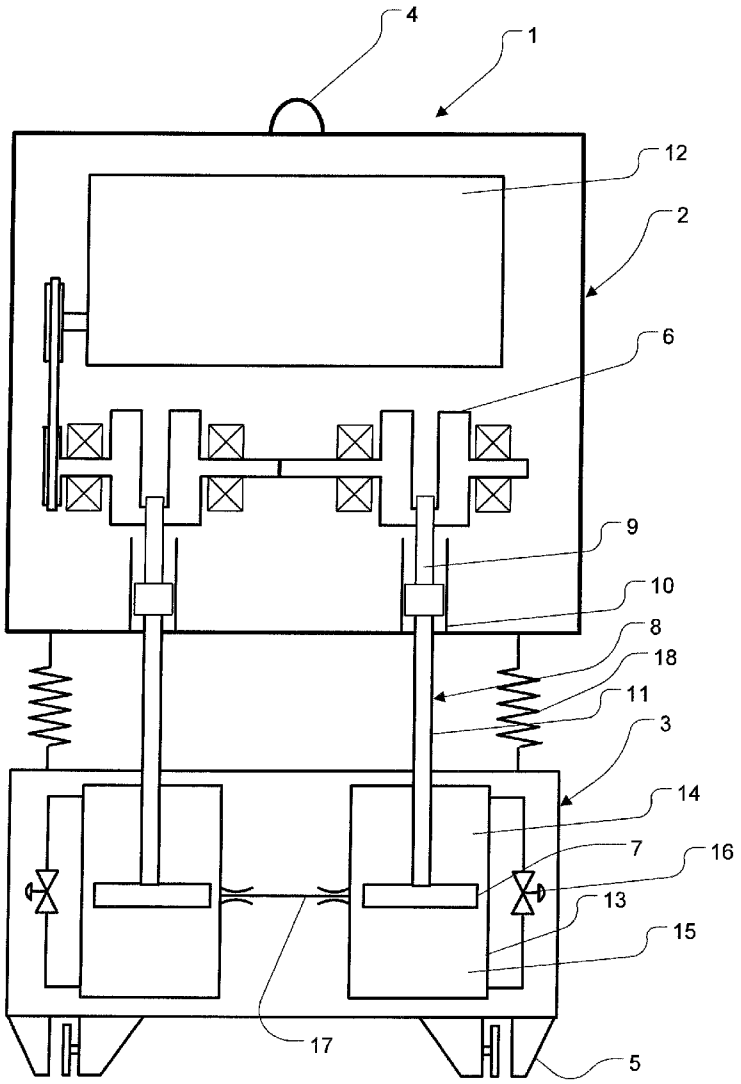

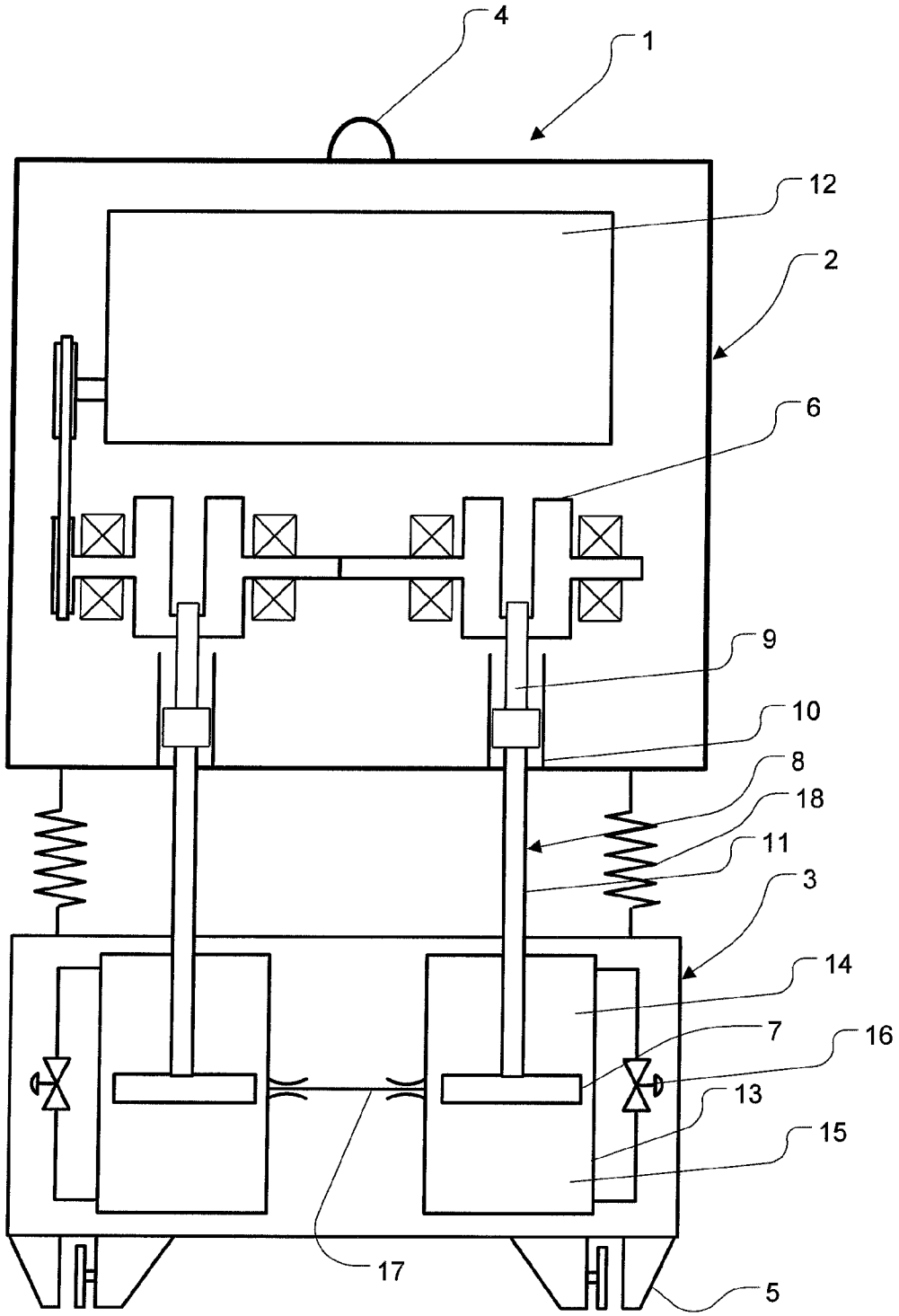

Figure 1

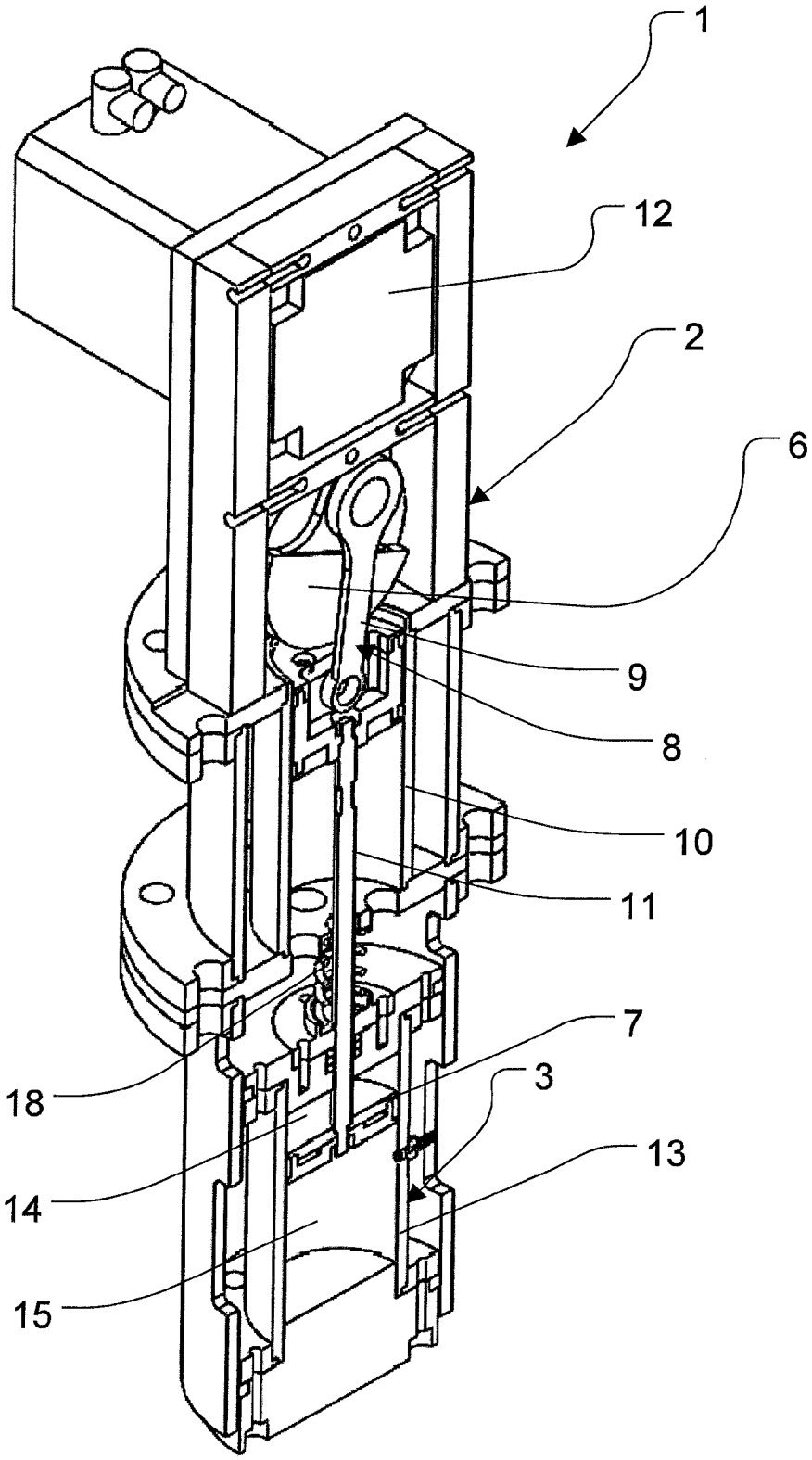

Figure 2

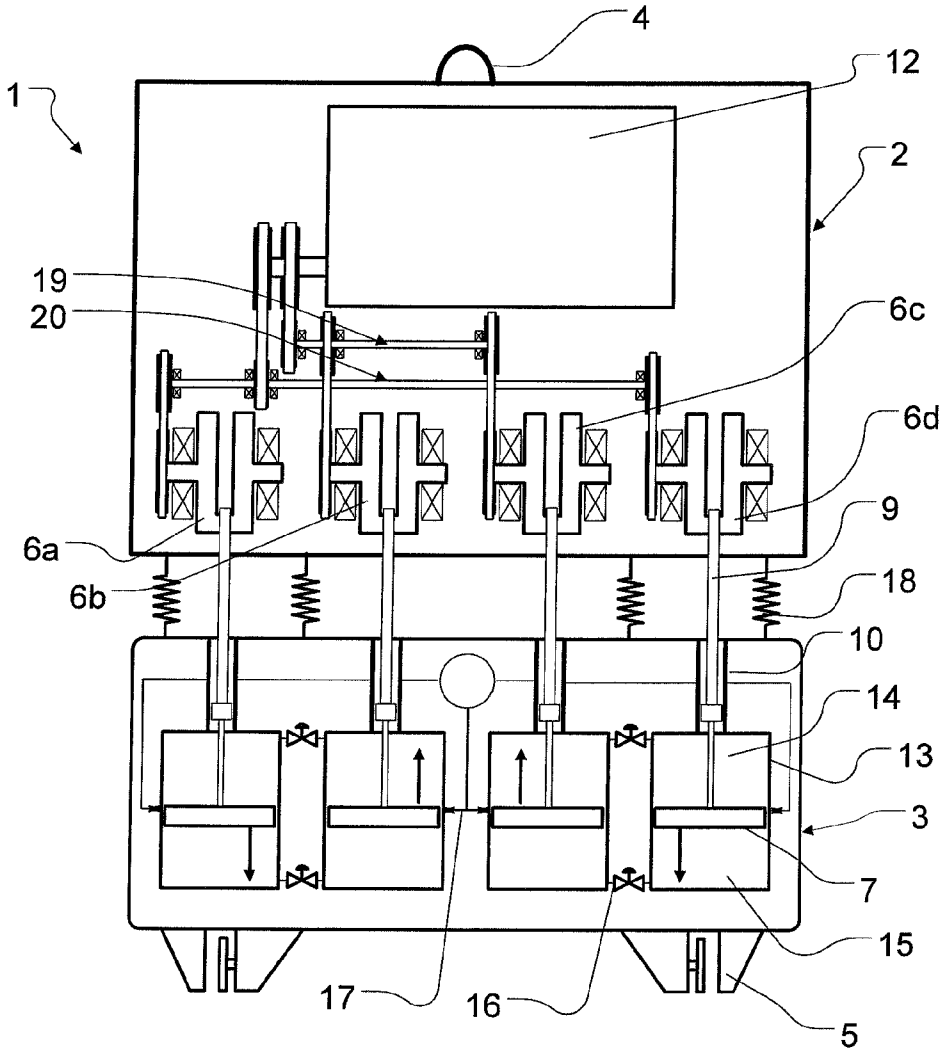

Figure 3

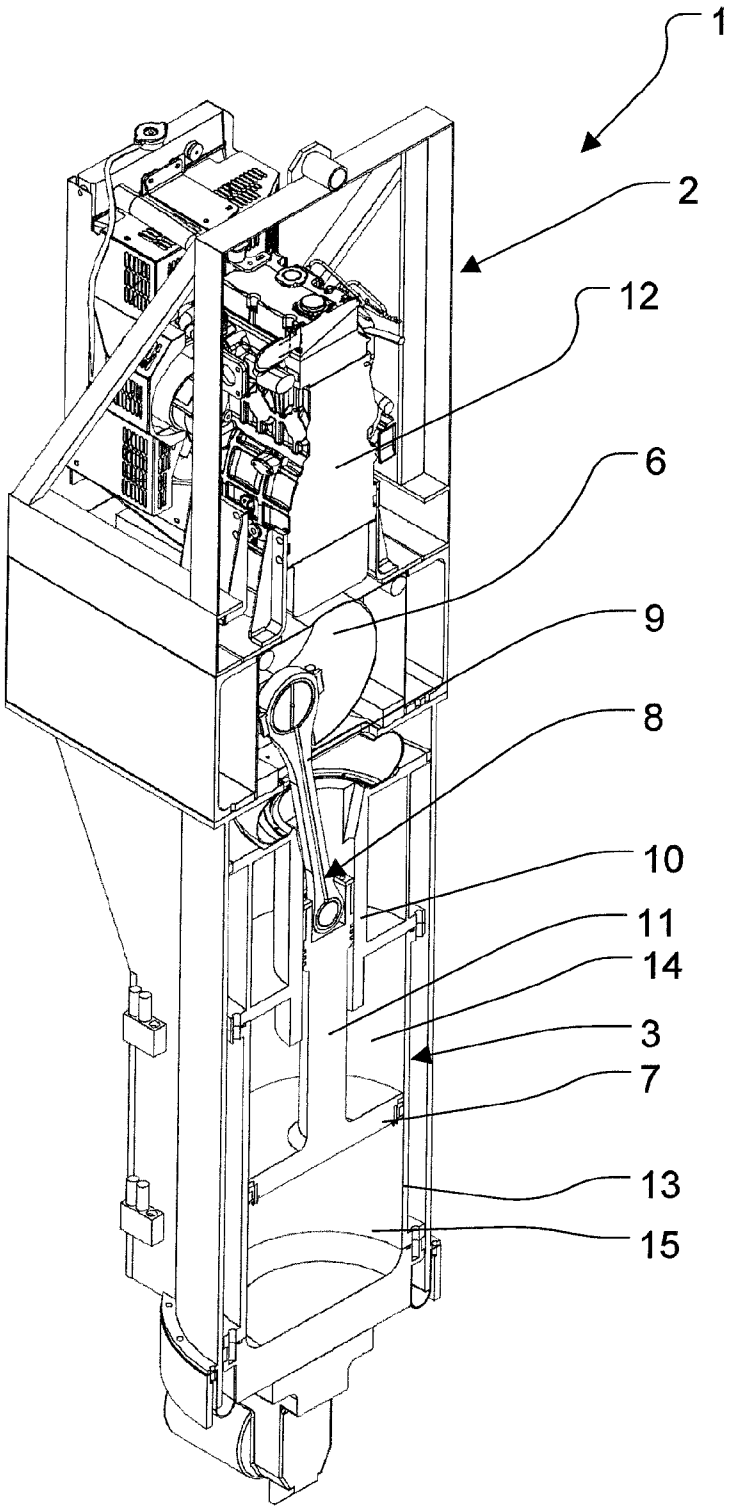

Figure 4

VIBRATORY MECHANISM FOR A PILE DRIVER AND A PILE DRIVER

CROSS-REFERENCE TO RELATED APPLICATION

[0001] This application is a Section 371 National Stage Application of International Application PCT/EP2009/066244 filed Dec. 2, 2009 and published as WO2010/063764 in English.

BACKGROUND

[0002] The discussion below is merely provided for general background information and is not intended to be used as an aid in determining the scope of the claimed subject matter.

[0003] Aspects of the invention relate to a vibratory mechanism comprising a static part and a dynamic part being movable with respect to the static part.

[0004] Such a vibratory mechanism is known from U.S. Pat. No. 5,088,565. The static part of the prior art mechanism is attached to a cable of a crane and the dynamic part comprises jaws for clamping a pile to be driven into the ground or to be extracted out of the ground. The dynamic part is provided with a pair of eccentrically rotatable weights which can be rotatably driven by a hydraulic motor. The weights rotate in opposite directions with respect to each other resulting in a vertical vibration of the dynamic part. A disadvantage of the known mechanism is that bearings of the rotatable weights are heavily loaded resulting in relatively high operational costs due to maintenance and replacement of the bearings.

[0005] SU 631 597 is related to a vibrating hammer which comprises an inner casing that is provided with a crankshaft which is connected to a piston via a connecting rod. The piston is movable within a cylinder. The crankshaft is driven via compressed air which is fed to the cylinder through a pipe being provided with a control valve for allowing compressed air to the cylinder. The mechanism is unbalanced. The inner casing is connected to an outer casing through springs. Under operating conditions, the inner casing will vibrate within the outer casing due to the unbalanced mechanism. Under certain conditions the inner casing hits the outer casing at the upper or lower inner side thereof, depending on the presence of hitting plates at the outer casing.

SUMMARY

[0006] This Summary and the Abstract herein are provided to introduce a selection of concepts in a simplified form that are further described below in the Detailed Description. This Summary and the Abstract are not intended to identify key features or essential features of the claimed subject matter, nor are they intended to be used as an aid in determining the scope of the claimed subject matter. The claimed subject matter is not limited to implementations that solve any or all disadvantages noted in the Background.

[0007] A mechanism having an aspect of the invention includes a static part that is provided with a drivable crankshaft and a dynamic part that comprises a housing and a vibration member being drivably coupled to the crankshaft through a connecting rod and linearly movable with respect to the housing in a direction of vibration, wherein said housing is resiliently coupled to the vibration member via a fluid spring, wherein the mechanism is adapted such that under operating conditions the vibration member is driven upon driving the crankshaft by driving means.

[0008] Upon driving the crankshaft the vibration member will vibrate linearly with respect to the housing of the dynamic part. Due to the resilient coupling between the vibration member and the housing, the housing of the dynamic part will vibrate as well. In case the vibratory mechanism is applied in a pile driver the housing of the dynamic part may be provided with clamping means for clamping a pile. The mechanism provides the opportunity to select the rotation speed of the crankshaft, the weights of the vibration member and the housing and the degree of resiliency between the vibration member and the housing such that the dynamic part vibrates at a certain frequency, whereas transfer of inertia forces in the mechanism via the crankshaft to the remainder of the static part is minimized. In fact the reciprocating forces of the first order, affected by the vibration member weight, can be used to balance the vibrational forces of the housing of the dynamic part on the crankshaft under certain conditions. This means that forces on crankshaft bearings in the static part are minimized, hence reducing wear and operational costs. It is noted that the term "reciprocating forces of the first order" is typically used in case of balancing reciprocating piston-crank-connecting rod mechanisms, such as present in internal combustion engines, in order to indicate inertial forces of the piston acting in the direction of piston movement and occurring at the frequency of rotation of the crank.

[0009] A further advantage of the crank-connecting rod mechanism is that it can be built in a compact way compared to a conventional dynamic part comprising oppositely rotating weights, since in the latter case at least two rotatable weights must be located next to each other as seen in horizontal direction so as to achieve a vertical vibration.

[0010] Moreover, due to the resilient coupling between the housing and the vibration member sudden peak forces on the housing are not directly transferred to the vibration member and the static part. Such a sudden peak force may typically happen in a pile driver if a pile is fixed to the housing to be driven into the ground and the pile touches a rigid layer or a stone or the like. The resulting so-called rebound effect is smoothly transferred to the static part by the mechanism. In a specific embodiment the fluid spring of the mechanism could be replaced by an alternative resiliency, for example a coil spring.

[0011] It is noted that the crankshaft and the piston in the mechanism as disclosed in SU 631 597 is mounted in the same inner casing. This is fundamentally different from the mechanism herein since the known mechanism does not provide the opportunity to create a static part having minimized vibrational forces; on the contrary the vibrational forces are required to effect hammering of the inner casing onto the outer casing. This results in heavy loads onto the crankshaft bearings. The vibratory mechanism herein enables to solve the problem due to providing the static part with the crankshaft and providing the dynamic part with the vibration member. This also allows a direct and simple coupling between the crankshaft and a driving means for driving the crankshaft. Furthermore, the crankshaft bearings are not adversely affected by sudden loads on the dynamic part.

[0012] In one embodiment the characteristics of the fluid spring can be adjusted. The characteristics can be manipulated such that the natural frequency of the mass-spring system comprising the vibration member and the fluid spring is similar to or approaches the frequency of the crankshaft under operating conditions. If this situation is achieved under operating conditions the inertia force of the vibration member on

the crankshaft is minimized. The relationship between the mentioned frequencies may be slightly influenced by the weight of the housing of the dynamic part, but this weight will be high with respect to the weight of the vibration member, in practice, such that the weight ratio is rather stable under operating conditions. It is also noted that the natural frequency of the mass-spring system comprising the vibration member and the fluid spring is much higher than the natural frequency of the mass-spring system comprising the housing of the dynamic part and the fluid spring.

[0013] The fluid spring characteristics can be influenced by modifying its fluid properties, for example. In case of an alternative resiliency between the housing and the vibration member, such as a coil spring, the spring characteristics could be influenced by an actuator.

[0014] In a practical embodiment the vibration member is a piston and the housing comprises a cylinder within which the piston is slidable, and the fluid spring is formed by a fluid chamber being present between the piston and the cylinder. When the piston is movable in the cylinder and a fluid such as air or an alternative gas is present in the fluid chamber, the fluid chamber functions as a fluid spring. It is noted that a part of the connecting rod weight contributes to the vibration member weight.

[0015] In one embodiment the fluid spring is formed by two fluid chambers located at opposite sides of the piston. This provides more flexibility in influencing the spring characteristics of the resiliency between the piston and the cylinder.

[0016] The fluid chambers may be allowed to communicate with each other through a controllable valve. When opening the valve and moving the piston within the cylinder the fluid will flow from the fluid chamber of which the volume reduces to the fluid chamber of which the volume increases. If the valve is open such that no compression/expansion occurs in the fluid chambers the spring characteristics created by the fluid chambers are negligible. This may be desired under certain conditions, for example in case of a pile driver which is starting-up. In that case the housing should not be driven before the piston vibration has reached a certain frequency. When the valve is open the piston may vibrate within the cylinder without driving the housing of the dynamic part. In practice, when the vibratory mechanism is applied in a pile driver the valve may be closed at a piston frequency exceeding for example 1200 rpm, such that the starting-up period during which the frequency of the housing of the dynamic part is relatively low, is short.

[0017] It is also conceivable that the fluid chambers communicate with the ambient air through a controllable valve during the starting-up period.

[0018] In an alternative embodiment the mechanism comprises at least two vibration members, wherein the mechanism is adapted such that under operating conditions the vibration members can be driven in opposite directions, for example in counter phase. This allows the opportunity to increase the vibration frequency of the vibration members to a relatively high level, for example the operational frequency in case of a pile driver, whereas the vibration of the housing in the direction of vibration remains negligible, because the forces of the oppositely moving vibration members on the housing via the resiliency can be balanced.

[0019] The characteristics of the resiliency between the housing and the vibration members can be varied. Due to this feature the resiliency can be adjusted such that the counter force of the resiliency on the vibration members at least partly reduce the inertia forces of the vibration members on the static part during the increase of the vibration frequency of the vibration members whereas the vibration of the housing remains negligible. When reaching the operational speed and vibration of the housing is desired, the mechanism can be set such that the vibration members move synchronously in the same direction. In practice, during increase of the frequency the resiliency will be adjusted to a stiffer level.

[0020] In case the vibrating members are pistons moving oppositely in corresponding cylinders and the resiliency is formed by the fluid chambers located at opposite sides of each of the pistons, the fluid pressure in the fluid chambers can be increased during the period of increasing the frequency of the reciprocating speed of the pistons in order to reduce the reciprocating inertial forces of the pistons on the static part.

[0021] In an embodiment which comprises at least two pistons and two corresponding cylinders the fluid chamber of one cylinder can communicate with the fluid chamber of the other cylinder such that under operating conditions a decreasing fluid chamber volume in one cylinder can communicate with an increasing fluid chamber volume in the other cylinder. During starting-up of, for example, a pile driver the fluid chambers can be connected to each other in fluid communication which means that the piston in one cylinder pushes the fluid from the fluid chamber in that cylinder to the fluid chamber of the other cylinder, whereas the piston of the other cylinder synchronously sucks the fluid from the one cylinder. During such a starting-up period the pistons vibrate within the cylinders without driving the housing of the dynamic part.

[0022] In case the pistons can be driven in counter phase two cylinders may be disposed parallel to each other and the fluid chambers at the same side of the pistons can be connected to each other. During the starting-up period the pistons can be driven in counter phase such that the volumes of the mutually connected fluid chambers at the same side of the pistons also vary in counter phase. As a consequence, the sum of the volumes of the connected fluid chambers substantially remains the same. Of course, the fluid communication can be effected by a controllable valve or the like.

[0023] Alternatively, the mechanism may comprise adjusting device for adjusting the stroke of the vibration member with respect to the eccentricity of the crankshaft in order to minimize the amplitude of the vibration member during a starting-up period.

[0024] In a particular embodiment the fluid spring can communicate with a compressor for increasing or decreasing the pressure of the fluid in the fluid spring. This feature provides the opportunity to influence the amplitude of the housing, for example. A variable pressure, depending on the operation frequency is also conceivable. Alternative adjusting devices for manipulating the fluid spring characteristics are conceivable.

[0025] The housing of the dynamic part and the static part may be connected to each other via a spring and/or a damper so as to create a coupling between the static part and the dynamic part in addition to the coupling via the connecting rod, and to reduce any transfer of vibrations from the dynamic part to the static part.

[0026] In a particular embodiment a first part of the connecting rod is guided by a crosshead guide in the static part or in the dynamic part and a second part thereof being fixed to the vibration member is movable along its longitudinal center

line only. This means that the second part has a one-dimensional motion in the direction of vibration of the vibration member.

[0027] In one embodiment the vibration speed of the vibration member, the weight of the housing and the characteristics of the resiliency between the housing and the vibration member are selected such that the vibration member and the housing substantially vibrate in counter phase under operating conditions, and the weight of the vibration member is selected such that its inertia force of the first order substantially balances the inertia force of the housing. In practice, the weight of the vibration member and the housing may be selected first and the characteristics of the resiliency between the housing and the vibration member is then adjusted to optimize the functioning of the mechanism. For example, the characteristics of the resiliency can be influenced by the volume of the fluid chamber in case of a fluid spring.

[0028] An aspect of the invention is also related to a pile driver comprising a vibratory mechanism as described hereinbefore.

[0029] The static part of the vibratory mechanism may be provided with a drive for driving the crankshaft. This is advantageous in terms of mobility compared to a mobile pile driver of which the drive is located on the ground. This is also advantageous in terms of efficiency and reduced complexity with respect to conventional pile drivers in which hydraulic systems are used and power must be transmitted from a power supply on the ground to the static part.

[0030] In one embodiment, the drive is an internal combustion engine.

BRIEF DESCRIPTION OF THE DRAWINGS

[0031] Aspects of the invention will be explained in more detail hereinafter with reference to drawings, which are schematic representations of embodiments of the invention.

[0032] FIG. **1** is a schematic view of an embodiment of the vibratory mechanism.

[0033] FIG. **2** is a perspective view of an alternative embodiment of the vibratory mechanism of FIG. **1**.

[0034] FIG. **3** is a similar view as FIG. **1** of an alternative embodiment on a smaller scale.

[0035] FIG. **4** is a similar view as FIG. **2** of another alternative embodiment.

DETAILED DESCRIPTION OF THE ILLUSTRATIVE EMBODIMENT

[0036] FIG. **1** shows an embodiment of the vibratory mechanism **1** according to the invention. The vibratory mechanism **1** is part of a pile driver in this example, but may be suitable for alternative technical devices.

[0037] The vibratory mechanism **1** as shown in FIG. **1** comprises a static part **2** and a dynamic part **3**. The dynamic part **3** is movable with respect to the static part **2**. The static part **2** is provided with a lifting eye **4**. In a pile driver the lifting eye **4** suspends from a cable of a crane (not shown). The dynamic part **3** is provided with a pair of clamps **5** for clamping a pile to be driven into the ground or to be extracted out of the ground. The pair of clamps **5** may be driven mechanically, hydraulically or the like.

[0038] Under operating conditions the dynamic part **3** oscillates in a vertical direction at a predetermined frequency and with a predetermined amplitude with respect to the static part **2**.

[0039] FIG. **1** shows that the static part **2** is provided with a drivable crankshaft **6**. The crankshaft **6** comprises two crankpins located eccentrically with respect to the center line of the crankshaft **6**.

[0040] The dynamic part **3** is provided with two pistons **7** as vibration members. Each of the pistons **7** is coupled to the crankshaft **6** through a connecting rod **8**. In this case the connecting rod **8** comprises a first part **9** which is guided by a crosshead guide **10** in the static part **2**, and a second part **11** which is movable along its longitudinal center line only. The piston **7** is fixed to the second part **11**. As a consequence of this configuration, a through hole in the dynamic part **3** through which the second part **11** of the connecting rod **8** moves up and down may have the shape of the cross-sectional area of the second part **11** and the dimensions of the cross-sectional area of the through hole may be slightly larger than those of the second part **11**.

[0041] In the embodiment as shown in FIG. **1** the crankshaft **6** is driven by an internal combustion engine **12**. Alternative driving means are conceivable, for example a hydraulic or electric motor. An advantage of applying the internal combustion engine **12** is that it can be used as stand-alone unit in the static part **2**. Thus, under operating conditions the piston is driven upon driving the crankshaft **6** by driving means.

[0042] The dynamic part **3** further comprises a housing in the form of cylinders **13** which function as guides for guiding the pistons **7**. The cylinders **13** have a fixed position with respect to the dynamic part **3**. The pistons **7** are slidable within the cylinders **13**. The cylinders **13** are filled with a fluid, for example air. In each of the cylinders **13** the piston **7** divides the cylinder space into two fluid chambers **14**, **15** located at opposite sides of the piston **7**. If the fluid chambers **14**, **15** are closed spaces or nearly closed spaces, they form a fluid spring. This means that the housing of the dynamic part **3** or the cylinder **13** is resiliently coupled to the piston **7**. In case the fluid is a gas, the fluid chambers **14**, **15** form a gas spring.

[0043] The fluid spring characteristics can be adjusted by modifying the fluid properties in the fluid chambers **14**, **15**. In the embodiment of FIG. **1** the fluid chambers **14**, **15** can communicate with each other through a controllable valve **16**. When the valve **16** is fully opened the fluid chambers **14**, **15** communicate with each other. This means that in case of a downward displacement of the piston **7** the fluid from the lower fluid chamber **15** is pressed to the upper fluid chamber **14** via the valve **16**. In that case the housing of the dynamic part **3** or the cylinder **13** will not follow the displacement of the piston **7**. When the valve **16** is closed and the piston **7** is displaced down-wardly the fluid in the lower fluid chamber **15** will be compressed and the fluid in the upper fluid chamber **14** will be expanded. As a result the cylinder **13** will follow this displacement in downward direction. Depending on the frequency of the piston movement, the weight of the housing of the dynamic part **3** and the properties of the fluid in the fluid chambers **14**, **15** the housing of the dynamic part **3** will follow the piston movement at a certain phase shift, comparable to a conventional spring-mass system.

[0044] It appears to be advantageous to select the influencing parameters of the mechanism **1** such that the pistons **7** and the housing of the dynamic part **3** vibrate in counter phase. In this case the actual inertia force of the housing of the dynamic part **3** is directed opposite to the actual deceleration of the pistons **7**. Since the inertia force is transferred to the static part **2** via the connecting rod **8** and the crankshaft **6**, vibrations of the dynamic part **3** would be transferred to the static part, as

well, and bearings of the crankshaft **6** would be loaded heavily. However, this effect can be minimized by selecting the weights of the pistons **7** such that inertia forces of the first order, generated by the pistons **7**, balance the inertia force of the housing of the dynamic part **3**. The inertia forces of the first order are directed in the direction of deceleration of the pistons **7**. It is noted that the inertia forces of the pistons **7** include the inertia forces of the reciprocating portions of the connecting rods **8**.

[0045] More generally, the weights of the pistons **7** and the housing **13** are more or less fixed; in practice it is desired that the natural frequency of the spring-mass system comprising the pistons **7** and the fluid springs is similar to the actual frequency of the crankshaft **6** under operating conditions. This can be achieved by manipulating the characteristics of the fluid spring under operating conditions.

[0046] The valve **16** can also be used in case of starting-up the vibratory mechanism **1**. In case of driving a pile into the ground it may be desired to avoid low frequency vibrations which might occur during a starting-up period of the mechanism **1**. This can be avoided by opening the valve **16** during increase of frequency of the piston **7** such that the housing of the dynamic part **3** remains in a non-vibration mode. Once a predetermined desired frequency has been reached the valve **16** is closed and the starting-up period of vibration of the housing of the dynamic part **3** up to its desired frequency is relatively short. Alternatively, an adjusting mechanism (not shown) for adjusting the piston stroke with respect to the eccentricity of the crankshaft **6** may be present.

[0047] The spring characteristics of the fluid chambers **14**, can be influenced by varying the pressure of the fluid. This can be achieved by applying a compressor (not shown) which increases or decreases the fluid pressure in the fluid chambers **14**, **15** via a press line **17**.

[0048] It is noted that it is not necessary that the fluid chambers **14**, **15** can communicate with each other. It is also possible to vent the fluid chambers **14**, **15** to the ambient air during the starting-up period, such that pressure build-up in the fluid chambers **14**, **15** is negligible.

[0049] The vibratory mechanism **1** further comprises springs **18** to hold the static part **2** and the dynamic part **3** at a substantially constant distance with respect to each other. The spring **18** may also have damping characteristics to eliminate any residual vibrations between the static part **2** and the dynamic part **3**.

[0050] FIG. **2** shows an alternative embodiment of the vibratory mechanism **1** as part of a pile driver. The reference signs of the embodiment of FIG. **2** refer to similar components as being present in the embodiment of FIG. **1**. The embodiment as shown in FIG. **2** is provided with a single piston **7**. This provides the opportunity to design a compact vibratory mechanism **1** as seen in a direction perpendicular to the direction of vibration of the piston **7**.

[0051] FIG. **3** shows another alternative embodiment, which is provided with four pistons **7** in line. The reference signs in FIG. **3** refer to corresponding components as shown in FIG. **1**. It can be seen that each piston **7** is coupled to a separate crankshaft **6***a*-**6***d*. Two inner crankshafts **6***b*, **6***c* located between two outer crankshafts **6***a*, **6***d* are driven by the internal combustion engine **12** via a first transmission **19** and the outer crankshafts **6***a*, **6***d* are driven via a second transmission **20**. During a starting-up period the first and second transmissions **19**, **20** are controlled such that the two inner pistons **7** located in the middle of the dynamic part **3** are moving in counter phase with respect to the two outer pistons **7** located at the outer sides of the dynamic part **3**, as indicated by arrows in FIG. **3**. During this period the valves **16** are open. When both inner pistons **7** move upwardly and both outer pistons **7** move downwardly the fluid in the upper fluid chambers **14** of both inner cylinders **13** flow to the associating upper fluid chambers **14** of both outer cylinders **13**, and the fluid in the lower fluid chambers **15** of both outer cylinders **13** flow to the associating lower fluid chambers **15** of both middle cylinders **13**.

[0052] It may be clear that upon increasing the rotation frequency of the crankshafts **6***a*-**6***d*, whereas the pistons **7** only displace the fluid in and out of the fluid chambers **14**, **15** the reciprocating inertial forces of the piston **7** on the crankshafts **6***a*-**6***d* become relatively high, because the counter force of the fluid in the fluid chambers **14**, **15** is negligible. Therefore, at a certain rotation speed of the crankshafts **6***a*-**6***d* the valves **16** are closed whereas both inner pistons **7** are still running in counter phase with respect to both outer pistons **7**. Because of the opposite forces of the pistons **7** on the housing via the fluid in the fluid chambers **14**, **15**, the housing of the dynamic part **3** does not start vibrating or vibrating significantly. Increasing inertia forces of the pistons **7** on the crankshafts **6***a*-**6***d*, hence on the static part **2**, due to further increasing the speed of the pistons **7** can be compensated by increasing the pressure of the fluid in the fluid chambers **14**, **15**. In this way the speed of the crankshafts **6***a*-**6***d* can be set to a desired operational speed whereas the vibration of the housing of the dynamic part **3** remains negligible, and the inertia forces of the pistons **7** on the static part are minimized. If vibration of the housing must be started, the first and/or second transmission **19**, **20** are controlled such that the movement of the pistons **7** are synchronized in the same direction of movement. When closing the valves **16** during starting-up the mechanism it is preferred to close them slowly in order to balance the fluid in the fluid chambers **14**, **15** and to avoid that the fluid caught in the upper fluid chamber **14** differs from that in the lower fluid chamber **15**.

[0053] When a pile driver has driven a pile into the ground, for example, and the vibration of the dynamic part **3** should be stopped, the first and/or second transmission **19**, **20** can be controlled such that the movement of the inner pistons **7** is opposite to the movement of the outer pistons **7**, whereas the crankshafts **6***a*-**6***d* remain running at the operational frequency.

[0054] In the embodiment as shown in FIG. **3** the crosshead guide **10** is disposed in the dynamic part **3**. The advantage of this configuration is that it improves the flexibility of mutual displacement of the static part **2** with respect to the dynamic part **3**.

[0055] FIG. **4** shows another alternative embodiment. This embodiment is comparable to that of FIG. **2** and corresponding reference signs are used. In this case the cross-head guide **10** is provided in the dynamic part **3**. FIG. **2** also illustrates that a combustion engine **12** drives the crankshaft **6** of the vibratory mechanism **1**.

[0056] From the foregoing, it will be clear that the invention provides a relatively simple but robust vibratory mechanism.

[0057] The invention is not limited to the embodiments shown in the figures, which can be varied in several ways within the scope of the invention. It is for example possible that the piston is resiliently coupled to the housing of the dynamic part through a mechanical spring instead of a fluid spring. The crankshaft may be replaced by an alternative shaft

including an eccentric to which the connecting rod can be pivotally mounted. Furthermore, the mechanism is not only suitable for pile drivers, but it can be applied in alternative devices, for example for inserting elements into the ground by vibration, for compacting soils, cement, concrete, asphalt or the like.

[0058] The invention is also related to the following aspects:

[0059] Aspect 1: A vibratory mechanism (**1**) for a pile driver comprising a static part (**2**) and a dynamic part (**3**) being movable with respect to the static part (**2**), wherein the static part (**2**) is provided with a drivable crankshaft (**6**) and the dynamic part (**3**) comprises a housing (**13**) and a vibration member (**7**) being drivably coupled to the crankshaft (**6**) through a connecting rod (**8**) and linearly movable with respect to the housing (**13**) in a direction of vibration, wherein said housing (**13**) is resiliently coupled to the vibration member (**7**).

[0060] Aspect 2: A vibratory mechanism (**1**) according to aspect 1, wherein the housing (**13**) is resiliently coupled to the vibration member (**7**) via a fluid spring (**14**, **15**).

[0061] Aspect 3: A vibratory mechanism (**1**) according to aspect 2, wherein the vibration member is a piston (**7**) and the housing comprises a cylinder (**13**) within which the piston (**7**) is slidable, and the fluid spring is formed by a fluid chamber (**14**, **15**) being present between the piston (**7**) and the cylinder (**13**).

[0062] Aspect 4: A vibratory mechanism (**1**) according to aspect 3, wherein the fluid spring is formed by two fluid chambers (**14**, **15**) located at opposite sides of the piston (**7**).

[0063] Aspect 5: A vibratory mechanism (**1**) according to aspect 4, wherein the fluid chambers (**14**, **15**) can communicate with each other through a controllable valve (**16**).

[0064] Aspect 6: A vibratory mechanism (**1**) according to one of the preceding aspects, wherein the mechanism (**1**) comprises at least two vibration members (**7**), and wherein the mechanism (**1**) is adapted such that under operating conditions the vibration members (**7**) can be driven in opposite directions.

[0065] Aspect 7: A vibratory mechanism (**1**) according to aspect 6, wherein the characteristics of the resiliency between the housing (**13**) and the vibration members (**7**) can be varied.

[0066] Aspect 8: A vibratory mechanism (**1**) according to one of the aspects 2-5, wherein the fluid spring (**14**, **15**) can communicate with compressing means for increasing or decreasing the pressure of the fluid in the fluid spring (**14**, **15**).

[0067] Aspect 9: A vibratory mechanism (**1**) according to one of the preceding aspects, wherein the mechanism (**1**) comprises adjusting means for adjusting the stroke of the vibration member (**7**) with respect to the eccentricity of the crankshaft (**6**).

[0068] Aspect 10: A vibratory mechanism (**1**) according to one of the preceding aspects, wherein the housing (**13**) of the dynamic part (**3**) and the static part (**2**) are connected to each other via a spring and/or a damper (**18**).

[0069] Aspect 11: A vibratory mechanism (**1**) according to one of the preceding aspects, wherein a first part (**9**) of the connecting rod (**8**) is guided by a crosshead guide (**10**) in the static part (**2**) or in the dynamic part (**3**) and a second part (**11**) thereof being fixed to the vibration member (**7**) is movable along its longitudinal center line only.

[0070] Aspect 12: A vibratory mechanism (**1**) according to one of the preceding aspects, wherein the vibration speed of the vibration member (**7**), the weight of the housing (**13**) and the characteristics of the resiliency between the housing (**13**) and the vibration member (**7**) are selected such that the vibration member (**7**) and the housing (**13**) substantially vibrate in counter phase under operating conditions, and wherein the weight of the vibration member (**7**) is selected such that its inertia force of the first order substantially balances the inertia force of the housing (**13**).

[0071] Aspect 13: A pile driver comprising a vibratory mechanism (**1**) according to one of the preceding aspects.

[0072] Aspect 14: A pile driver according to aspect 13, wherein the static part (**2**) is provided with driving means (**12**) for driving the crankshaft (**6**).

[0073] Aspect 15: A pile driver according to aspect 14, wherein the driving means is an internal combustion engine (**12**).

1. A vibratory mechanism comprising a static part and a dynamic part being movable with respect to the static part, wherein the static part is provided with a drivable crankshaft and the dynamic part comprises a housing and a vibration member being drivably coupled to the crankshaft through a connecting rod and linearly movable with respect to the housing in a direction of vibration, wherein said housing is resiliently coupled to the vibration member via a fluid spring, wherein the mechanism is adapted such that under operating conditions the vibration member is driven upon driving the crankshaft by a drive device.

2. The vibratory mechanism according to claim **1**, wherein the characteristics of the fluid spring is adjustable, preferably such that the natural frequency of the mass-spring system comprising the vibration member and the fluid spring is similar to or approaches the frequency of the crankshaft under operating conditions.

3. The vibratory mechanism according to claim **1**, wherein the vibration member is a piston and the housing comprises a cylinder within which the piston is slidable, and the fluid spring is formed by a fluid chamber being present between the piston and the cylinder.

4. The vibratory mechanism according to claim **3**, wherein the fluid spring is formed by two fluid chambers located at opposite sides of the piston.

5. The vibratory mechanism according to claim **4**, wherein the fluid chambers can communicate with each other through a controllable valve.

6. The vibratory mechanism according to claim **1**, wherein the mechanism comprises at least two vibration members, and wherein the mechanism is adapted such that under operating conditions the vibration members can be driven in opposite directions.

7. The vibratory mechanism according to claim **6**, wherein the characteristics of the resiliency between the housing and the vibration members is adjustable.

8. The vibratory mechanism according to claim **1**, and further comprising a compressor wherein the fluid spring is coupled to the compressor.

9. The vibratory mechanism according to claim **1**, wherein the mechanism comprises adjusting means for adjusting the stroke of the vibration member with respect to the eccentricity of the crankshaft.

10. The vibratory mechanism according to claim **1**, wherein the housing of the dynamic part and the static part are connected to each other via a spring and/or a damper.

11. The vibratory mechanism according to claim **1**, wherein a first part of the connecting rod is guided by a crosshead guide in the static part or in the dynamic part and a second part thereof being fixed to the vibration member is movable along its longitudinal center line only.

12. The vibratory mechanism according to claim **1**, wherein the vibration speed of the vibration member, the weight of the housing and the characteristics of the resiliency between the housing and the vibration member are selected such that the vibration member and the housing substantially vibrate in counter phase under operating conditions, and wherein the weight of the vibration member is selected such that its inertia force of the first order substantially balances the inertia force of the housing.

13. A pile driver comprising a vibratory mechanism according to claim **1**.

14. The pile driver according to claim **13**, wherein the static part comprises a drive device coupled to the crankshaft.

15. The pile driver according to claim **14**, wherein the drive device is an internal combustion engine.

* * * * *