(12) INTERNATIONAL APPLICATION PUBLISHED UNDER THE PATENT COOPERATION TREATY (PCT)

(19) World Intellectual Property Organization
International Bureau

(43) International Publication Date
03 November 2022 (03.11.2022)

WIPO | PCT

(10) International Publication Number
WO 2022/229389 A1

(51) International Patent Classification:
B01D 29/68 (2006.01)

(21) International Application Number:
PCT/EP2022/061490

(22) International Filing Date:
29 April 2022 (29.04.2022)

(25) Filing Language: English

(26) Publication Language: English

(30) Priority Data:
2106272.4 30 April 2021 (30.04.2021) GB
2116312.6 12 November 2021 (12.11.2021) GB

(71) Applicant: **INHERITING EARTH LIMITED** [GB/GB]; Unit 5, Avon Trading Estate, St Philips, Bristol Bristol BS2 0XA (GB).

(72) Inventors: **D'ORTON GIBSON, Reuben**; Inheriting Earth Limited, Unit 5, Avon Trading Estate, St Philips, Bristol Bristol BS2 0XA (GB). **LAWRANCE-OWEN, Michael**; Inheriting Earth Limited, Unit 5, Avon Trading Estate, St Philips, Bristol Bristol BS2 0XA (GB). **KETTLE AIERS, Reuben**; Inheriting Earth Limited, Unit 5, Avon Trading Estate, St Philips, Bristol Bristol BS2 0XA (GB). **FEENEY, Fergal**; Inheriting Earth Limited, Unit 5, Avon Trading Estate, St Philips, Bristol Bristol BS2 0XA (GB). **ROOT, Adam**; Inheriting Earth Limited, Unit 5, Avon Trading Estate, St Philips, Bristol Bristol BS2 0XA (GB).

(74) Agent: **WILLIAMS, Ben**; Ben Williams IP Limited, St John's House, St John's Street, Chichester Sussex PO19 1UU (GB).

(81) Designated States *(unless otherwise indicated, for every kind of national protection available)*: AE, AG, AL, AM, AO, AT, AU, AZ, BA, BB, BG, BH, BN, BR, BW, BY, BZ, CA, CH, CL, CN, CO, CR, CU, CZ, DE, DJ, DK, DM, DO, DZ, EC, EE, EG, ES, FI, GB, GD, GE, GH, GM, GT, HN, HR, HU, ID, IL, IN, IR, IS, IT, JM, JO, JP, KE, KG, KH, KN, KP, KR, KW, KZ, LA, LC, LK, LR, LS, LU, LY, MA, MD, ME, MG, MK, MN, MW, MX, MY, MZ, NA, NG, NI, NO, NZ, OM, PA, PE, PG, PH, PL, PT, QA, RO, RS, RU, RW, SA, SC, SD, SE, SG, SK, SL, ST, SV, SY, TH, TJ, TM, TN, TR, TT, TZ, UA, UG, US, UZ, VC, VN, WS, ZA, ZM, ZW.

(84) Designated States *(unless otherwise indicated, for every kind of regional protection available)*: ARIPO (BW, GH, GM, KE, LR, LS, MW, MZ, NA, RW, SD, SL, ST, SZ, TZ, UG, ZM, ZW), Eurasian (AM, AZ, BY, KG, KZ, RU, TJ, TM), European (AL, AT, BE, BG, CH, CY, CZ, DE, DK,

(54) Title: A PUMP-EQUIPPED SEPARATOR

Fig. 5

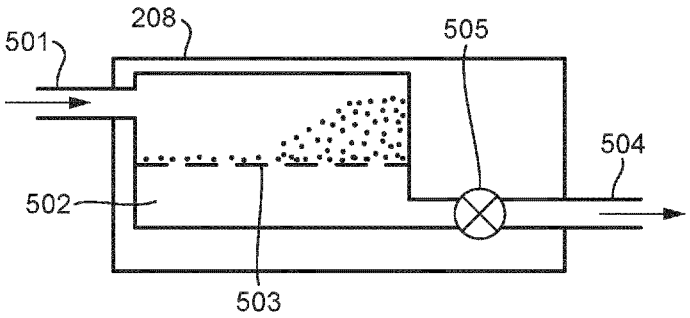

(57) Abstract: The invention relates to preventing microplastics from entering the environment. In particular the invention is directed to regenerating the pressure consumption of filters for removing microplastics in effluent from any source but in particular removing microfibers from domestic and commercial washing machine wastewater, industrial textile processing waste and roadside runoff. A separator is provided for separating microplastics from an effluent, the separator comprising a chamber with an inlet and an outlet, a sieve structure forming a permeable barrier between the inlet and the outlet to filter the effluent, and a pump in fluid communication with the outlet of the chamber.

WO 2022/229389 A1

[Continued on next page]

EE, ES, FI, FR, GB, GR, HR, HU, IE, IS, IT, LT, LU, LV, MC, MK, MT, NL, NO, PL, PT, RO, RS, SE, SI, SK, SM, TR), OAPI (BF, BJ, CF, CG, CI, CM, GA, GN, GQ, GW, KM, ML, MR, NE, SN, TD, TG).

Published:

— *with international search report (Art. 21(3))*

— *in black and white; the international application as filed contained color or greyscale and is available for download from PATENTSCOPE*

A PUMP-EQUIPPED SEPARATOR

BACKGROUND

Field of the Invention

The invention relates to preventing microplastics from entering the environment. In particular the invention is directed to regenerating the pressure consumption of filters for removing microplastics in effluent from any source but in particular removing microfibers from domestic and commercial washing machine wastewater, industrial textile processing waste and roadside runoff.

Description of Related Art

Microfibres are the most abundant form of microplastic pollution in rivers and oceans. Due to their microscopic scale, microfibers are eaten by organisms at all levels of the food chain, from plankton to top predators. Once ingested, plastics reduce feeding efficiency (false satiation) they may damage the gut of the animal and transfer harmful additives like PCBs, pesticides, flame-retardants to the animal that consumed it. Plastics consumed by animals low in the food chain also impact their predators, which consume numerous contaminated prey daily. The pervasiveness of microfibers in the food chain has naturally resulted in concern regarding their transfer to humans, and contamination has been observed in crustaceans, molluscs and fish species destined for human consumption.

Unlike microbeads, which are easily excluded from toiletries and cleaning products, microfibres are formed through damage to clothing. One third of all microplastics in the oceans come from washing of synthetic textiles. Synthetic fabrics derived from petrochemicals make up 65% of all textiles. Wear and tear caused by abrasive forces in washing machines result in the fragmentation of man-made textiles, forming hundreds of thousands of microfibres, less than 5 mm in length, which leak from homes and drainage networks into the ocean.

The vast impact of microplastics on marine ecosystems is starting to be understood. A 2019 study published in the 'Science of the Total Environment' journal found 49% of 150 fish samples from the North East Atlantic Ocean contained microplastics with evidence of this causing harm to brain, gills, and dorsal muscles. These microplastics are also passed onto people consuming fish at a rate of between 518-3078 microplastic items/year/capita.

The impact is not just being seen in fish stocks but also algae, the building blocks of life. A 2015 study published in the 'Aquatic Toxicology' journal demonstrated high concentrations of polystyrene particles reduced algal growth up to 45%. This should be of concern as microalgae are one of the world's largest producers of oxygen on this planet.

Wastewater treatment plants cannot remove the millions of fibres that pass through them every day. Currently, secondary level water treatment removes around 98% of the microplastics that pass through them. However, the small proportion that escapes still equates to tens of millions of fibres per treatment works per day.

Furthermore, wastewater treatment plants produce a "sewage sludge" and plastic microfibers are found on discharge when released into the natural environment when the sludge is spread on agricultural land, thus microfibers make their way into the food chain, waste to energy (which can destroy fibres but release harmful gasses) or discharged into rivers or the ocean.

Solutions are being developed to capture microfibers produced in domestic washing machines by filtering the effluent from these machines.

A typical front-loading domestic washing machine is shown in Figure 1 in schematic form. The machine 100 includes a rotatable sealed drum unit 101 for receiving garments to be washed. The drum unit 101 has a perforated cylindrical rotatable drum mounted inside a static waterproof shroud. Clean water is fed into the drum 101 via a cold-water or hot-water inlet 102 connected to mains and under mains pressure of typically 1-5 bar. An electronic valve, under the control of a CPU 104, manages the water entering the drum 101. The inlet 102 is connected to a drawer 105 where a user can

add liquid or powdered detergent. The drawer has an outlet that leads to the drum unit 101. The drum unit may include a heater under the control of the CPU to heat the water to the desired wash temperature, typically up to 90 degrees Celsius. The drum is rotatable by an electric motor 106 under the control of the CPU 104 at speeds of typically from 5 to 1600 rpm. The drum unit can be emptied via a drain pump 108 controlled by the CPU. The drain pump is rated with a given power to produce a known pressure at its output. The drain pump feeds into an outlet 109, which is connected, to the household or industrial drain and eventually the wastewater network.

A typical top-loading machine will have the axis of the drum vertical but will otherwise share many of the features of the front loading machine.

Figure 2a shows a typical domestic washing machine setup where a washing machine 201 sits on a floor 202 underneath a work surface 203. The waste output 204 of the washing machine is fed into an open soil pipe 205. The opening of the soil pipe is above the floor by a given height, typically 30-100cm and it is open to prevent syphoning of all of the water out of the washing machine when it drains. The top of the soil pipe 206 is known as the waterline and the pump of the washing machine needs to be powerful enough to raise the waste to above this waterline in order to effectively drain it. When a washing machine initially fills, a quantity of water is required to fill the region below the drum before the drum itself fills, the drum being where the water is actually required for the wash process to occur. Typically, a washing machine is designed to retain a small reservoir of water between washes, so that no extra water is required for water to become available in the drum. This is advantageous because the first water to arrive in the drum contains the detergent as it is rinsed out of the drawer into the drum. Without the small reservoir of water, the detergent would be lost and the wash process would be ineffective.

In use, dirty laundry is placed in the drum, and a wash cycle initiated by a user. The CPU allows cold water to flow via the drawer to mix with detergent and then on into the drum, where the water is heated. The combined water,

detergent and laundry is agitated by rotating the drum. During this process, dirt and grease is released into the water and fibres from the clothing too. If the clothing is synthetic, microfibers are typically released as the clothes rub against each other. The resulting effluent at the end of the wash cycle is a mixture of debris, dirt, grease and microfibers and potentially large objects such as coins or nails left in the clothing. This effluent is then drained and pumped out of the drum at a typical rate of 3-8 gallons per minute. Second or third rinse cycles with clean water may be performed, resulting in effluent with less concentrated contaminants. The drain rate of the washing machine is impacted by the level of water in the drum, the height of the outlet point and if a filter is connected to the outlet.

Current washing machine filters are designed to stop pennies and buttons breaking the washing machine pump. These filters often have open aperture of 7-14mm which is too large to effectively capture large amounts of microfibers. The filtration required to stop microfibres is typically less than 400 micrometers (um). Reducing the aperture size will remove a larger proportion of the fibers in the water.

Microfibre separators are being developed that can be retrofitted externally to a washing machine, by connecting the output of the washing machine into a standalone separator unit and the output of the separator unit sent to the open soil pipe. However, the location of such a separator unit is limited to above the water line. If such a separator unit is located below the water-line, then it will not drain fully, which poses problems in emptying the unit because it will be full of contaminated waste water. It therefore needs to be located above the water line. However, fitting a separator unit above the water line can be problematic, as shown in Figure 2b. The filter unit 207 shown in dotted lines needs to be located above the water line but the clearance between the work-surface 203 and the top of the soil pipe 206 is insufficient to allow this.

It is therefore an object of the invention to provide a separator unit that can be fitted in any location, including below the water line.

Another problem is that mesh filters clog up quickly and when this happens their effectiveness drops off considerably. This causes the pressure to drop and the flow rate to reduce, which can lead to damage to pumps and other elements of the system and flooding.

It is therefore a further object of the invention to provide a separator unit for separating microfibers from effluent that does not clog and that maintains an effective operating pressure over time.

SUMMARY OF THE INVENTION

A separator is provided for separating solid material, including microplastics, from a fluid such as effluent, the separator comprising a chamber with an inlet and an outlet, a sieve structure forming a permeable barrier between the inlet and the outlet to filter the fluid, and a pump in fluid communication with the chamber,
wherein the separator may further comprise a filter pressure regeneration apparatus for dislodging filtered material from the sieve structure, wherein the filter pressure regeneration apparatus comprises a conduit and a nozzle assembly having at least one cleaning jet and wherein the pump is arranged to recirculate the filtered fluid to the conduit of the filter pressure regeneration apparatus. The description herein is directed towards filtering microplastics from effluent, but the separator may be applied to separate any solid material from any fluid.

The at least one cleaning jet may be for directing fluid towards the outlet side of the sieve structure.

The pump may be a water pump arranged to also drain the separator or a separate pump may be provided to drain the separator.

A restriction may be provided in a conduit downstream from the pump, wherein the aperture of the restriction may be set to ensure that a preset

amount of filtered fluid is recirculated into the filter pressure regeneration apparatus and an amount of the filtered fluid is drained.

An air vent may be provided in a conduit between the pump and the filter pressure regeneration apparatus to introduce air into the conduit.

The filter pressure regeneration apparatus may comprise a conduit and a nozzle assembly having at least one cleaning jet directed towards the outlet side of the sieve structure and wherein a second pump is arranged to recirculate the filtered fluid to the conduit of the filter pressure regeneration apparatus.

The separator may further comprise an air pump located between the pump and the filter pressure regeneration apparatus to introduce air into the conduit and to drain the separator.

The water pump may be a positive displacement pump or a centrifugal pump.

The filter pressure regeneration apparatus may comprise a conduit and a nozzle assembly having at least one cleaning nozzle directed towards the outlet side of the sieve structure.

The chamber may be cylindrical and the sieve structure may be a coaxial cylinder within the chamber and wherein a wall may be provided to one side of the inlet such that the fluid is guided around the sieve structure through a channel such that filtered solid dislodged by the wash water from the cleaning nozzle accumulates on the side of the wall away from the inlet. The advantage of this arrangement, whereby filtered solid materials progress along a channel, is the better use of space, increased solid material collection capacity and ease of handling filtered solids.

A trap may be provided comprising an opening in the base of the channel to a sub-chamber, where the accumulating filtered solid can be collected.

The nozzle assembly may comprise a plurality of cleaning nozzles that are rotatable around the central axis of the sieve structure.

The nozzle assembly may be rotated by propulsion nozzles arranged to direct a stream of water. The nozzles may be arranged off-centre from the central axis to provide propulsion or have a vector that is tangential to the circumference of the sieve structure.

The nozzle assembly may be rotated by an arrangement of the cleaning nozzles being offset from the central axis of rotation and thus providing the propulsion force.

The chamber may have a closed top and bottom.

The structure may have an opening at the top to relieve pressure.

The separator may further comprise a filter pressure regeneration apparatus for dislodging filtered material from the sieve structure, wherein a fluid detector is provided, and wherein the filter pressure regeneration apparatus is arranged to be activated in accordance with the output from the fluid detector.

A reservoir may be provided below the chamber and the fluid detector is located in proximity to the reservoir.

The fluid detector may be a float switch, capacitive senor, ultrasonic detector, optical sensor or pressure sensor.

A bypass conduit may be provided between the inlet and the outlet to provide an alternative route for fluid in the event that the flow of fluid is impeded.

The nozzle assembly may comprise a nozzle arranged to direct a stream of fluid towards a rotatable plate, wherein the plate is arranged to rotate under the force of the stream of fluid and to project the fluid outwards towards the sieve structure.

In an embodiment, a washing machine with a separator as described above is provided.

In an embodiment, a method of operating a separator of the type described above is provided, comprising the steps of, filtering fluid through a sieve structure, operating a pump to pressurise the filtered fluid.

The pump may be operated to drain the separator.

The pump may be operated to recirculate the filtered fluid to a pressure regeneration apparatus that is arranged to spray the filtered side of the sieve structure with wash fluid to dislodge debris from the unfiltered side of the sieve structure.

BRIEF DESCRIPTION OF THE DRAWINGS

Figure 1 shows a typical domestic washing machine.
Figure 2a shows a washing machine under a counter.
Figure 2b shows the location of a separator externally from a washing machine.
Figure 3a shows a conventional separator.
Figure 4 shows a cross section of a conventional filter assembly.
Figure 5 shows a cross section of an embodiment having a drain pump.
Figure 6 is a graph showing the efficacy of different types of filter assembly.
Figure 7 shows a cross section of an embodiment having a single nozzle for regenerating the pressure consumption of the filter.
Figure 8 shows a cross section of an embodiment having single nozzle for regenerating the pressure consumption of the filter with a combined recirculation and drain pump.
Figure 9 shows a cross section of an embodiment having single nozzle for regenerating the pressure consumption of the filter with separate recirculation and drain pumps.

Figure 10 shows a cross section of an embodiment having single nozzle for regenerating the pressure consumption of the filter with a recirculation pump and an air drain pump.

Figure 11 shows a cross section of an embodiment having an array of nozzles for regenerating the pressure consumption of the filter.

Figure 12a shows an embodiment having a cylindrical sieve structure and an array of fixed cleaning nozzles.

Figure 12b shows another view of the embodiment of 12a.

Figure 13a shows an embodiment having rotating cleaning nozzles.

Figure 13b shows a detailed view of waste material being ejected from the unfiltered side of the sieve structure by spraying with a jet of fluid from the filtered side of the sieve structure.

Figure 13c shows a detailed view of a water pellet being ejected from a nozzle.

Figure 14a shows an alternative arrangement of cleaning nozzles.

Figure 14b shows an alternative arrangement of cleaning nozzles.

Figure 15a shows a propulsion nozzle assembly.

Figure 15b shows a propulsion nozzle assembly in action.

Figure 16a shows a perspective view of an embodiment of a separator.

Figure 16b shows a cross sectional view of an embodiment of a separator.

Figure 16c shows a cross sectional view of an embodiment of a separator.

Figure 16d shows a cross sectional view of an embodiment of a separator.

Figure 17 shows a cross sectional view of an embodiment of a separator having a recirculation pump for recirculating filtered effluent as wash fluid.

Figure 18a shows a cross sectional view of an embodiment of a separator having a combined recirculation and drain pump for recirculating filtered effluent as wash fluid and for draining the separator.

Figure 18b shows an alternative arrangement of pump and conduits.

Figure 19a shows a cross sectional view of an embodiment of a separator having separate recirculation and drain pumps for recirculating filtered effluent as wash fluid and for draining the separator.

Figure 19b shows an alternative embodiment of separate regeneration and drainage pump design.

Figure 19c shows an alternative embodiment using a single pump which can alternate between supplying wash water and draining the filter by a use of a valve or valves.

Figure 19d shows an alternative embodiment of a single pump in which the pump is pumping water to both the regeneration and the drain at the same time.

Figure 20a shows a cross sectional view of an embodiment of a separator having a water pump for recirculation and an air pump for draining the separator.

Figure 20b is a perspective view of a filter assembly having a nozzle assembly with a rotatable plate.

Figure 21a is a perspective view of an embodiment of a separator unit.

Figure 21b is a perspective view of the embodiment of Figure 21a with the jug removed.

Figure 22a is a section view of the embodiment of Figure 21a.

Figure 22b is a perspective view of the pump and ducting assembly of the embodiment of Figure 21a.

Figure 23 is a perspective view of a part of a filter assembly of the embodiment of Figure 21a.

Figure 24 is a perspective view of a nozzle assembly of the embodiment of Figure 21a.

Figure 25 is a top view of the jug of Figure 21b with a cap removed.

Figure 26 is a view of a printed circuit board in place in a component of the embodiment of Figure 21a.

Figure 27a shows a washing machine equipped internally with an embodiment of the separator

Figure 27b shows a washing machine retro-fitted externally with an embodiment of the separator.

DETAILED DESCRIPTION OF THE PREFERRED EMBODIMENT

While the description that follows focuses on washing machines for clothes, it is to be understood that the teachings herein are not limited to use in washing machines as they are equally suited to other processing appliances, such as

but not limited to driers, such as wash-dryer combination machines, tumble driers, dyeing machines, cutting machines, recycling machines, dry cleaning machines and or any other domestic or commercial textile processing equipment. The teachings herein could also be used in other industries in which microparticles may be generated as a result of processing of items. References to washing machines herein are therefore to be understood as comprising any similar appliance of the types contemplated herein.

The separator described herein may be installed within the appliance itself during manufacture as shown in Figure 27a, or retro-fitted externally to a washing machine or other appliance, as shown in Figure 27b.

The separator system 2800 described above may be installed within a washing machine, as shown in Figure 27a. The waste from the washing machine drum connects to the inlet 2807 of the separator 2800 and the outlet of the separator connects to the waste outlet 2809. A supply of fresh water 2806 for the regeneration apparatus is shown but if the recirculation system is used then this supply is unnecessary. A separator system 2808 may be located outside a washing machine, connected to the waste water outlet of the washing machine, as shown in Figure 27b. The inlet 2809 supplies effluent into the separator 2808 and the outlet 2810 feeds into the soil pipe 2805. The embodiment shown is fitted with a drain pump to enable installation below the dotted water line in the figure, i.e. the top of the soil pipe. The embodiment shown also has a recirculation system therefore a separate supply of fresh water is not needed. The device may be connected to an electrical power supply (not shown) to operate the pump or pumps.

It will further be appreciated that the teachings herein are suited to any application that requires the removal of microplastics, including microfibers, from any effluent, including wastewater, within which such materials may be entrained. This also includes the runoff from roadside drains.

It should be noted that wastewater from a washing machine, and other applications, contain a wide variety of compounds including microplastics.

Although the filter is specifically suited to the capture of microplastic, due to the environment in which it operates this system is also robust against the harsh and varied compounds the filter comes into contact with and is also suited to filtering out any solid material entrained in an effluent.

Effluent is understood to include wastewater from the sources mentioned above. It can also include the wastewater from Wastewater Treatment Plants. Effluent includes entrained dirt, detergent and micropollutants including microplastics, which include microfibers.

In a typical wash, the highest concentration of microfibers is in the range 5mm to 150 um but shorter microfibers exist that are still harmful in the environment. If it were required to remove 99% of microfibers of all sizes down to 50um in length, a mesh with apertures of 50um would theoretically be able to achieve this. In practice however, such a mesh placed directly in the stream of effluent will clog almost immediately and the filter will become inoperable. This will create a rise in pressure consumption in the outlet and potentially damage the pump.

A conventional separator or filter arrangement is shown in Figure 3. An inlet 301 directs effluent into a filter housing 302, within which a sieve structure 303 is supported. The sieve structure could be a mesh or other perforated material where the mesh opening size is selected to trap particles of a required dimension. Filtered effluent passes through the sieve structure 303 to an outlet 304. The filtered waste accumulates on what is called the unfiltered side of the sieve structure, while the outlet side of the sieve structure is called the filtered side. Filter efficacy is its effectiveness at removing debris of a given size range while maintaining an acceptable flow rate and is closely related to the filter's pressure consumption. The sieve structure shown in Figure 3 will become blinded over by filtered debris rapidly, so that its pressure consumption will increase, and its efficacy decrease.

Figure 4 shows an alternative arrangement where the effluent inlet 401 is located at one end of a channel 402, where the sieve structure 403 forms a

wall of the channel 402. In this way the incoming effluent will urge the filtered waste towards the other end of the channel.

Figure 5 is an embodiment of the invention, which is a separator unit 208 that can be fitted below the water line, as shown in Figure 2b. The separator unit comprises an inlet 501, a housing 502 and a sieve structure 503 and an outlet 504. The outlet is fitted with a pump 505 which can drain the filter unit. Without the pump, effluent will sit in the pipe between the top of the washing machine outlet and the water line, if the separator unit is fitted below the water-line. With the pump 505 fitted, all of the effluent sitting in the washing machine outlet pipeline 209 on the unfiltered side of the separator can be pulled through the separator and all of the filtered effluent on the outlet side can be pushed up the separator outlet pipeline 210 on the filtered side of the separator and into the soil pipe 205. The pump can be a positive displacement pump or a centrifugal pump or any other type of pump.

The provision of a pump enables greater flexiblility in the location of the filter. This is advantageous to users who may be limited in where they could locate the filter.

In use, as the effluent fills the chamber, particles are filtered out and remain stuck to the outside of the mesh, increasing the power consumption and lowering the efficacy of the filter as the mesh starts to clog.

Curve 1 in Figure 6 is a measure of the effectiveness of the arrangement shown in Figure 5, given a constant flow of dirty water, with a consistent contamination level. The y-axis represents the fluid pressure; P, at the inlet 201 and it can be seen to rise gradually, then exponentially as the mesh becomes blinded over with filtrate.

In practice, the flow of effluent from a washing machine is not constant over time because a limited amount of water is used in each wash cycle. Curve 2 in Figure 6 shows how the inlet pressure varies over time where the flow of effluent stops, drains through the device and then starts again. Reductions in

the pressure can be seen, as the flow stops and debris previously held against the mesh by the pressure of the flow falls away, revealing pores that allow fluid to flow through again, until they become re-blocked in the next cycle. Curve 2 demonstrates that the pressure consumption required by the conventional device increases through use, so the inlet pressure required to filter effluent eventually becomes greater than the pump is able to provide.

It is necessary to open this device and clean the mesh by hand to return its pressure consumption back to a level for it to operate effectively, i.e. to regenerate its pressure consumption. This is a tedious and messy process. For some filter types, regeneration is not possible, for example if the filter is a cartridge type filter. These filters require the user to remove and replace them regularly, which provides a worse user experience and results in wastage from consumable parts. The present invention therefore seeks to overcome the problem of regenerating the pressure consumption of mesh filters used for separating microplastics from a flow of effluent.

Figure 7 shows an embodiment of the invention for separating microplastics from an effluent that regenerates the pressure consumption of a filter, comprising an effluent inlet 701 feeding a channel bounded by a filter housing 702 and a sieve structure 703. The filtered effluent exits from the separator via an outlet 704. A cleaning nozzle 707 is provided that is arranged to direct a cleaning jet of wash fluid towards the filtered side of the sieve structure 703. The cleaning nozzle 707 is connected by conduit 708 to a supply of wash fluid. The cleaning nozzle is periodically activated to dislodge filtered material from the unfiltered side of the sieve structure, which regenerates the pressure consumption and thus allows more effluent to be filtered out and thus regenerate the pressure consumption. As the waste material is dislodged, the flow of effluent carries it further away from the inlet towards the far end of the channel. In this embodiment the supply of wash fluid is the filtered effluent itself. A conduit 705 channels filtered effluent to a pump 706 which supplies pressurised wash fluid to the cleaning nozzle 707. This unit could not be fitted below the waterline.

Figure 8 is a further embodiment where filter pressure is regenerated and the separator unit can be fitted below the waterline. A pump 805 is provided to drain the unit and to supply pressurised wash fluid to a cleaning nozzle 807. The separator unit comprises an inlet 801 into a housing 802 that supports a mesh filter 803. The outlet 804 of the unit is connected to pump 805. The pump is arranged to direct filtered effluent into a conduit 806 that provides pressurised wash fluid to the cleaning nozzle and also to empty the separator via outlet 808. The volume of filtered effluent to be emptied from the washing machine when the filter is in operation is much greater than the volume of filtered effluent required for the cleaning nozzle. Therefore a restriction 809 in the outlet 808 is required to provide enough resistance to the flow through the outlet to encourage filtered effluent into the wash fluid conduit 806.

Optionally an air inlet 810 may be provided in the wash fluid conduit 806 to introduce air into the wash fluid. This can increase the effectiveness of the wash fluid in dislodging debris from the sieve structure.

It may be advantageous to be able to control the drainage of a separator unit and the pressure regeneration separately. Figure 9 shows an embodiment that allows this by the provision of two pumps; a drainage pump 905 and a recirculation pump 908. The separator unit has an inlet 901 into a housing 902 that supports a sieve structure 903 that separates the inlet 901 from the outlet 904. The outlet 904 has a conduit that leads to the drainage pump 905. Also on the filtered side of the sieve structure is a wash fluid conduit 907 that leads to a wash fluid pump 908 and on to a further wash fluid conduit 909 that feeds the cleaning nozzle 910. The drainage pump 905 may be a positive displacement pump or a centrifugal pump that operates at around 0.1 Bar 15litres per minute, but could be in the range up to 1 bar and 30 litres per minute. The recirculation pump 1408 operates at around 0.3 Bar and 8 litres per minute, but could be in the range up to 5 bar and 15 litres per minute.

Figure 10 shows an alternative embodiment of a separator unit where an air pump is used to assist with regeneration and drainage. An inlet 1001 is

provided into a housing 1002 that supports a sieve structure 1003 that separates the inlet 1001 from an outlet 1004. A conduit leads to a pump 1006 that pumps filtered effluent into a further conduit 1007 that feeds wash fluid to a cleaning nozzle 1008. An air pump is connected into the further conduit 1007 to pump air into the wash fluid system. Air enhances the cleaning effect of the wash fluid jet emanating from the cleaning nozzle 1008. The air pump can also be operated to push any remaining fluid in the filter out, which enables this embodiment to be mounted below the water-line. A one-way valve would need to be provided at the inlet (not shown) to prevent fluid from being pushed back into the washing machine.

The pressure regenerating effect can be enhanced by a filter pressure regeneration system. This system comprises a nozzle assembly having an array of cleaning nozzles. Figure 11 shows an embodiment for separating microplastics from an effluent, comprising an effluent inlet 1101 feeding a channel bounded by a filter housing 1102 and a sieve structure 1103. The filtered effluent exits from the separator via an outlet 1104. The nozzle assembly 1105 comprises a plurality of cleaning jets 1105a, b, c, d, e fed with wash fluid by conduit 1107. The cleaning jets are periodically activated to dislodge filtered material from the unfiltered side of the sieve structure, which regenerate the pressure consumption and thus allows more effluent to be filtered out. As the waste material is dislodged, the flow of effluent carries it further away from the inlet towards the far end of the channel.

Figures 12a and 12b show an embodiment of the invention for separating microplastics from an effluent that regenerates the pressure consumption of a filter back to the level, or close to the level, of when it was new. A cylindrical chamber 1201 is provided having an inlet 1202 and a central cylindrical sieve structure 1203. A wall 1204 is provided to one side of the inlet that serves as a baffle to allow effluent to only flow one way when it enters the chamber and to allow filtered debris to collect in a specified location in the chamber. The inner wall of the chamber 1201, the outer wall of the sieve structure 1203 and wall 1204, define a channel through which unfiltered effluent flows around to the other side of the wall 1204 where it can accumulate. An aperture 1205 is

provided through which the filtered material can pass and be trapped. A filter pressure regeneration system is provided comprising a wash fluid conduit 1206 that supplies wash fluid to an array of cleaning nozzles 1207 that project radially outwards from the conduit 1206 and are arranged to direct wash fluid perpendicularly at the filtered side of the sieve structure 1203 to dislodge material that accumulates against the unfiltered side of the sieve structure. As material is dislodged it is swept by the flow of effluent towards the end of the channel, through the aperture 1205 and into the trap. The jets of wash fluid can be operated continuously or periodically. The wash fluid is pressurised and forced through the cleaning nozzles so that the jets of wash fluid emanating from the cleaning nozzles have enough power to dislodge material, against the flow of the fluid component of the effluent passing through the sieve structure. In an embodiment when the filter is in direct communication with the washing machine it may be advantageous to pause washing machine drainage briefly to enable the mesh to be cleaned without the pressure from waste water drainage. The wash fluid could be clean mains water and the pressure provided by mains water pressure. A pump could also be used to pump clean water or another fluid from another source or recirculate the filtered water. If the wash fluid is pressurised by a pump, then the power consumption of the pump is a design consideration; minimising this power consumption is preferred to reduce the costs of the pump itself and its operating cost and energy consumption.

Figure 13a shows an embodiment having a filter pressure regeneration system comprising a nozzle assembly that has two rotatable opposing cleaning nozzles 1301a, b extending radially from a central conduit 1302. The central conduit 1302 feeds the cleaning nozzles with pressurised wash fluid. Effluent enters the separator via inlet 1303 and passes around the channel formed by the outer wall of the chamber and the sieve structure 1304 around to the wall 1305 where filtered material M accumulates in the trap 1306. The cleaning nozzles 1301a, b are aligned perpendicularly to the sieve structure 1304. The cleaning nozzles can be rotated by a motor (not shown) or other means. In Figure 13a, the cleaning nozzles are rotated with or against the direction of flow of the effluent. Figure 13b shows a detailed view of the waste

material M being ejected from the unfiltered side of the sieve structure 1304 by a jet of wash fluid 1307 emanating from the cleaning nozzle 1301a. By having a reduced number of rotating cleaning nozzles, or reduced aperture area, the same coverage of the jet of wash fluid against the sieve structure can be achieved as with the array of fixed cleaning nozzles shown in Figure 12a, but with less power required of the wash fluid pump. The cleaning nozzles could also be directed downwards to urge the ejected material down towards the trap. This arrangement is beneficial as the diameter of the sieve structure can be increased, and thus the surface area of the mesh, without the need for additional cleaning nozzles.

The wash fluid could be water or it could be a mixture of air and water. Figure 13c shows a jet of cleaning fluid that includes water and air, where a pellet of water 1308 is seen being ejected from the cleaning nozzle 1301a. This increases the speed and ejection effect of the wash fluid.

In another embodiment, the nozzle assembly may be attached to a motor that has a shaft, on which an impeller is attached that rests in the reservoir. The motor simultaneously spins the spinner and the impeller. The impeller drains the water from the reservoir. The outlet has a recirculation channel as well as a drainage channel and the flow of water is fed through both, to drain the separator and to spray the filtered side of the sieve structure with filtered effluent.

The cleaning nozzles of the filter pressure regeneration system can be constructed so that a component of the pressurised wash fluid is tangential to the filtered side of the sieve structure. The end of the cleaning nozzles could be angled in the direction of flow of the effluent. This has the effect of ejecting the filtered material further out into the flow of effluent where it can be swept further along towards a trap before it re-attaches to the sieve structure under the action of the flow of effluent through the sieve structure. The nozzle assembly could be rotated in the direction of flow of the effluent or against the flow of effluent.

Figure 14a shows an alternative arrangement of a nozzle assembly for the filter pressure regeneration system. A central hub 1401 supports an array of cleaning nozzles 1402a, b etc that extend radially from the hub 1401. The hub includes a conduit to feed pressurised wash fluid to the cleaning nozzles. The cleaning nozzles are arranged as a stack of four directly above each other and a matching stack directly opposite on the hub. This arrangement ensures that the entire width of the sieve structure is cleaned in each sweep of the nozzle assembly.

Figure 14b shows a nozzle assembly where the array of cleaning nozzles are arranged in a helix configuration around a central hub. This encourages the ejected filtered material downwards in the flow of effluent and to reach the trap more quickly.

Figure 15a shows a nozzle assembly rotation unit 1500 for propelling the nozzle assembly of the filter pressure regeneration system. The nozzle assembly rotation unit 1500 is fixed to the cleaning nozzles. The rotation unit comprises a central hub 1501 that acts as a conduit for propulsion fluid. The propulsion fluid and the wash fluid could be the same fluid, where the wash fluid conduit and rotation unit hub are connected. The rotation unit 1500 has radially extending arms 1502a, b that terminate in propulsion nozzles 1503a, b that are directed perpendicularly to the arms. Fluid exiting the propulsion nozzles is directed tangentially to the axis of the hub, causing the rotation unit 1500 to rotate and thus rotate the nozzle assembly that is fixed to it.

Figure 15b shows a nozzle assembly rotation unit 1500 in action.

Figure 16a shows an embodiment of a separator unit that includes a filter pressure regeneration system. The separator unit 1600 comprises an outer cylindrical wall 1601. In this embodiment the outer wall is transparent so that a user can see when the separator is operational and can also see the accumulated filtered waste. The separator unit 1600 has a circular cap 1602 and base 1603. An inlet 1604 is provided in the wall 1601. An outlet 1605 is provided in the base 1603.

Figure 16b shows a cross section of the separator unit 1600. A cylindrical sieve structure is provided coaxially with the outer wall 1601. The sieve structure extends between the cap 1602 and the base 1603 and provides a seal beyond which unfiltered effluent cannot pass. The sieve structure comprises an open support scaffold to which is fixed a mesh of aperture 50 micrometers. Mesh sizes in the range 5 – 150 micrometers are also suitable. The mesh separates the solid material from the liquid component of the effluent. An interior dividing wall 1607 creates a channel for the effluent to flow around the sieve structure, starting at the inlet 1604. The chamber is divided horizontally into two parts by a partition 1608. The partition 1608 has an opening on the other side of the interior dividing wall 1607. The combination of the opening and the lower part of the chamber beneath the partition 1608 provide a trap 1609 within which waste material can accumulate. The outlet 1605 is connected to a scoop 1610 that collects filtered effluent that passes through the mesh.

Figure 16c is a cross section of the separator unit 1600 taken along line A-A' in Figure 16a, where components of the filter pressure regeneration system are shown. A central vertical conduit 1611 provides wash fluid to the nozzle assembly. The nozzle assembly includes propulsion nozzles 1612 mounted on a rotatable hub 1613.

Figure 16d is a cross section of the separator unit 1600 taken along line B-B' in Figure 16a, where components of the filter pressure regeneration system are shown. The nozzle assembly includes cleaning nozzles 1614a to d mounted on the rotatable hub 1613. The cleaning nozzles extend radially out from the hub to be proximal to the filtered side of the sieve structure.

The separator unit is around 15cm in diameter. However, it will be appreciated that larger or smaller diameters could be selected depending on the application. The size of the unit is selected on the flow rate of effluent to be filtered. A separator diameter of 15 cm is sufficient to process the effluent from a domestic washing machine flowing at a rate of 13 litres per minute.

The open area of the mesh that enables the passage of water at a given flowrate can be adjusted by changing either the surface area of the mesh or the mesh aperture. The mesh aperture effects the efficiency, so a smaller mesh aperture is generally preferable to provide greater efficiency. The mesh surface area is a function of the height and diameter, therefore a given area can be matched by increasing the height if the diameter is reduced, and visa versa. All variables can be adjusted to meet product packaging and efficiency specification requirements.

Figures 17 to 20 show how the pump-assisted embodiments of Figures 7 to 9 can be applied to a separator unit with a complex pressure regeneration system. A separator unit 1770 has an inlet, a cylindrical housing and a sieve structure 1703. An outlet 1705 collects filtered effluent. A portion of the filtered effluent is diverted into conduit 1706, where it is pressurised by pump 1707 and directed into the central vertical conduit 1708 that provides wash fluid to the nozzle assembly 1709.

Figure 18a shows an embodiment that is suitable for location below the waterline and that also recirculates some of the filtered wastewater to regenerate the filter pressure. The separator unit 1800 has an inlet 1801, housing 1802, sieve structure 1803 and outlet 1804. All of the filtered effluent from the outlet 1804 is pumped out via pump 1805. The pump 1805 is arranged to divert a portion of the filtered effluent back via conduit 1806 to the central vertical conduit 1807 that provides wash fluid to the nozzle assembly 1808. A restriction 1809 is provided in the pump outlet pipe 1810 to ensure that an adequate volume of fluid is re-circulated to the pressure regeneration system. Alternatively, the pump 1805 may have a single outlet as shown in Figure 18b and a junction 1812 that diverts some filtered effluent to conduit 1813 to be re-circulated into the pressure regeneration system and the rest to the soil pipe. A restriction 1814 is provided to determine the proportion of filtered effluent that is re-circulated. Alternatively, the pump 1805 may have a single outlet as shown in Figure 18b and an electronically controlled diverter valve that diverts some filtered effluent to conduit 1813 to be re-circulated into

the pressure regeneration system and the rest to the soil pipe. These embodiments remove the need for separate recirculation and drainage pumps. An air inlet 1815 in the conduit 1806 may be provided that allows air into the pressure regeneration system to enhance the cleaning effect of the jet of cleaning fluid against the filtered side of the sieve structure.

It may be advantageous to be able to control the drainage of a separator unit and the pressure regeneration separately. Figure 19 shows an embodiment that allows this by the provision of two pumps; a drainage pump 1905 and a recirculation pump 1908. The separator unit has an inlet 1901 into a housing 1902 that supports a sieve structure 1903 that separates the inlet 1901 from the outlet 1904. The outlet 1904 has a conduit that leads to the drainage pump 1905. Also on the filtered side of the sieve structure is a wash fluid conduit 1907 that leads to a wash fluid pump 1908 and on to a further wash fluid conduit 1909 that feeds the cleaning nozzle assembly 1910. The drainage pump 1905 may be a positive displacement pump or a centrifugal pump that operates from 0.05 to 1 Bar and 5 to 30 litres per minute. The recirculation pump 1908 operates from 0.1 to 5 Bar and 2-20 litres per minute.

Figure 19b shows an alternative embodiment which has a separate wash fluid recirculation pump 1707 and drainage pump 1910. The primary advantage of the setup is that the drainage pump can be sized to drain the filter only and does not need to run during the washing machine drain cycle. This reduces power consumption, size and cost of drainage pump. A one-way valve 1911 is required to prevent the drained water recirculating to the pump inlet.

Figure 19c shows an alternative embodiment that has a single pump 1707, which can supply wash water or drain the filter by a use of a diverter valve 1912. A one-way valve 1913 is required to prevent the drained water recirculating to the pump inlet.

Figure 19d shows an alternative embodiment of a single pump 1707 in which the pump can pump water to both the regeneration system 1708 and the drain at the same time. The drain line has a constriction 1913 to force the majority

of the water through the regeneration route. A one-way valve 1914 is required to prevent the drained water recirculating to the pump inlet.

Figure 20a shows an alternative embodiment of a separator unit where an air pump is used to assist with regeneration and drainage. An inlet 2001 is provided into a housing 2002 that supports a sieve structure 2003 that separates the inlet 2001 from an outlet 2004. A conduit leads to a pump 2006 that pumps filtered effluent into a further conduit 2007 that feeds wash fluid to a cleaning nozzle assembly 2008. An air pump 2009 is connected into the further conduit 2007 to pump air into the wash fluid system. Air enhances the cleaning effect of the wash fluid jet emanating from the cleaning nozzle 2008. The air pump can also be operated to push any remaining fluid in the pipe connected to the outlet 2004 up to the waterline, which enables this embodiment to be mounted below the waterline. A one-way valve would need to be provided at the inlet (not shown) to prevent fluid from being pushed back into the washing machine. An air pump also allows the filtered microplastics to be dried for ease of handling when the unit is emptied, this is due to the force of the air compressing the captured effluent and reducing the water content.

Figure 20b shows an alternative nozzle assembly having a nozzle 2005 arranged to direct a stream of fluid 2010 towards a rotatable plate 2011. The plate has features 2012 that are arranged to deflect the stream of fluid outwards towards the sieve structure 2013. The features 2012 are also arranged to cause the plate to rotate, so that the projected fluid sweeps across the surface of the outlet side of the sieve structure and thus dislodges debris on the other side.

A reservoir with a fluid sensor, such as a float switch may be provided beneath a separator unit. The float switch detects when fluid is present in the reservoir. The float switch is arranged to control the pump to wash the sieve structure to regenerate the filter pressure. A pressure sensor may also be provided. Alternatively a sensor can be provided at the inlet to detect when effluent is backing up and this can be used to activate the pump to regenerate

the filter pressure. The fluid sensor could be arranged so that it is activated when a particular level of fluid is detected and then activates either the drainage of the separator or pressure regeneration apparatus or both. Alternatively, the fluid sensor could be graduated so that it determines the level of fluid in the reservoir and the drainage is activated at a given level and the regeneration is activated at a different fluid level. Another alternative is to use a combination of sensing systems to provide the system with greater intelligence. This could be a capacitive sensor on the filter inlet to identify the presence of fluid and a pressure sensor measuring across either the filter mesh, bypass or both.

A bypass system may be provided to connect the inlet to the outlet. It ensures that if the separator gets blocked or the regeneration system fails for some reason, the entire wash load of effluent will not back up and cause a flood or impact the performance of the washing machine or drainage cycle but be diverted to the waste outlet. The separator unit has an effluent inlet, a housing supporting a sieve structure and an outlet. A bypass conduit links the inlet to the outlet. A pressure-activated valve is located in the conduit. The pressure-activated valve opens when the pressure at the inlet relative to the outlet exceeds a certain predetermined value. Therefore, if effluent backs up at the inlet because the filter is clogged, the valve will open and let effluent through to the outlet where it can safely discharge to a waste pipe. Alternatively, the valve may be of a type that can be electronically controlled. A pressure sensor that detects a pressure differential between the two sides of the sieve structure can control the valve, so that if the pressure differential reaches a predetermined level, the valve is operated and the bypass activated.

The nozzle assembly can be rotated using a direct drive such as an electric motor, as shown in Figure 18. The chamber 1801 has a mesh structure 1802 and nozzle assembly 1803, where the nozzle assembly is driven by motor 1804. This has the advantage of improving the reliability of the nozzle assembly. When the rotation of the nozzle assembly is powered by water pressure, the efficiency of the bearing surfaces between the nozzle assembly

and the mounting spigot is critical. If these surfaces become clogged with debris then the nozzles can stop rotating. Furthermore, the use of a motor to rotate the nozzle assembly can remove the need for a pump to pressurize the wash fluid to the nozzles; the centrifugal force generated in the nozzles draws the wash fluid into the nozzles throws it against the sieve structure.

The separator system described above may be installed within a washing machine or located outside a washing machine and connected to the waste water outlet of the washing machine. A more detailed description of a stand-alone separator is provided below:

A separator unit for locating externally to a textile processing apparatus such as a domestic washing machine is shown in Figure 21a. The unit 2100 comprises a body 2101 that has a waste water inlet and outlet (not shown) and a removable jug 2102. The jug includes a filter that can collect filtered microfibers. Removal of the jug allows the filtered microfibers to be emptied. Figure 21b shows the unit 2100 with the jug removed and separated from the unit. The jug has conduits for effluent inlet, effluent outlet and a pressure consumption regeneration fluid feed. The pressure consumption regeneration fluid is recirculated filtered effluent. The conduits terminate in stubs and the main body of the unit has openings to receive these conduit stubs; effluent inlet 2103, filtered effluent outlet 2104 and recirculated filtered effluent 2105. Each opening has a watertight seal that ensures no fluid leaks from the joints between the stubs and the openings when the jug is in place.

Figure 22a shows a cross section of the unit 2100 taken along line A-A' in Figure 21a. The unit has a waste water inlet 2201 that can be connected to the outlet of a washing machine. A conduit leads to the inlet stub 2202 of the jug 2203 where the waste-water, when the unit is in use, is directed tangentially into a cylindrical chamber 2204 of the jug 2203. Centrally located within the jug 2203 is a cylindrical filter assembly 205, shown in more detail in Figure 23. It is a plastic cage 2301 having a series of openings between a set of vertical ribs. A mesh (not shown) is overmoulded to the plastic cage. The

mesh is flush on the outside of the ribs. A baffle 2302 is provided that forms a wall inside the chamber 2204 to one side of the jug inlet 2202 so that effluent progresses around the inside of the chamber in only one direction. Captured particles pass around the filter, collect at the baffle and build up at the far side of the filter away from the inlet. This limits recirculation of the captured particles. The mesh by the inlet is kept clear and clean from particles. Therefore, when wastewater enters the filter chamber it can pass through the mesh. The filter assembly has a cap 2203b to prevent unfiltered effluent overflowing into the outlet. This filter cap can also be removed to allow the user to gain access to the regeneration apparatus for maintenance. The cap is designed in the top of the filter assembly to ensure that no captured effluent can escape through this route during maintenance. The jug 2203 has an open top so that a user can access the interior to remove filtered microplastics. The jug 2203 has an outer rim with a flange 2206. When the jug 2203 is installed in the unit, a lid 2207 is lowered onto the jug. The lid includes a seal 2208 that engages with the flange 2206. A lever 2209 operates a mechanism to lower the lid onto the jug and provide a water-tight seal of the jug into the unit.

Located within the filter assembly of the jug is a pressure consumption regeneration apparatus comprising a rotatable nozzle assembly 2210 mounted on a hollow spigot 2211. The rotatable nozzle assembly is captive on the spigot by the filter assembly cap 2203b. The spigot is fed by a conduit that is routed through the unit to a recirculating pump 2216a, shown in Figure 22b, that can provide wash fluid to the nozzle assembly. The nozzle assembly is shown in more detail in Figure 24. Two hollow arms 2402a, 2402b are connected to a central hub 2401; they are offset from the rotational axis and project tangentially from the hub. The end of each arm has a vertical column of nozzles 2403a, 2403b that are arranged to extend over the height of the mesh. The nozzles can be flexible so that any limescale build up can be easily cracked off. They may also be made from rigid plastic which may be advantageous for manufacturability and recycling of the product components. The offset tangential arrangement of the nozzle assembly means that when pressurised fluid is forced through the nozzles by the recirculation pump, it will cause the assembly to rotate at around 30-150 rpm. Rotation is arranged to

be in the opposite direction to the flow of fluid around the chamber; in this way, the angle of impact of the jet of fluid emitted from the nozzles is with the flow of effluent, which allows debris that is dislodged to flow further around the mesh than if the angle was against the flow of effluent. Figure 25 shows the nozzle assembly in place within the jug assembly. The spigot on which the regen apparatus is mounted operates as a plain bearing. It has a bleed path at the upper and lower section that allow an amount of wash fluid to exit. This is limited by a labyrinth seal of grooves. It is important to allow wash fluid to exit here as it ensures that any debris that may pass into this mechanical system can also be passed out and limit the risk of jamming. The grooves are toleranced to allow the largest particle that can fit through the mesh aperture in any orientation to pass through this bearing.

The jug 203 is provided with a moulding 2212 that collects the filtered effluent that has passed through the mesh. This moulding channels effluent to the jug outlet 2213. The jug outlet feeds two reservoirs; a recirculation reservoir 2214 and a drainage reservoir 2215. The recirculation reservoir is connected to the recirculation pump 2216a. The drainage reservoir is connected to a drainage pump 2216b, shown in Figure 22b. The outlet from the drainage pump feeds into a chamber 2217 that has a one-way valve 2218 to prevent filtered effluent from returning to the reservoirs 2214, 2215. Filtered effluent leaves the unit via outlet 2219.

Upon drainage from the filter unit the reservoirs are arranged to prioritise filling of the recirculation reservoir before the drainage reservoir. This ensures that there is always a supply of wash fluid for recirculation and it is not removed by the drainage pump.

The volume of the recirculation reservoir is designed to ensure a supply of wash fluid that can provide constant recirculation without fully emptying the reservoir. It might be advantageous in some scenarios to limit this and only provide enough wash fluid for a ‘burst’ as the reduction in this volume enables the product size to be reduced.

The volume of the drainage reservoir is designed to ensure any back flowing fluid from the outlet ducting and hose pipe can back fill into this chamber without overflowing. This ensures that the user can remove the filter jug when the product is installed close to the floor level and not result in any flooding.

The geometry of the reservoirs is designed with an angled base and centralised feed point for the pumps. This reduces sedimentation in the tank by removing static flow areas in the tank and creating a dynamic drainage environment that encourages particles to travel to the feed point and be removed by the pump along with any waste water.

The geometry and depth of the reservoirs is further designed to limit vortexing of the pumps which would otherwise reduce their ability to draw water into the pump and reduce their operational efficiency

The inlet 2201 and outlet 2219 of the unit 2100 are connected by a conduit 2220. A dispensing valve, 2221 is provided at the entrance to the conduit 2220. The dispensing valve opens at a predetermined pressure, so that if there is a fault in the unit and pressure builds up, the valve operates and effluent bypasses the filter section of the unit straight to the outlet. One-way valve 2222 is provided to prevent filtered effluent re-circulating and one-way valve 2223 is provided to prevent by-passing effluent to enter the reservoirs. In another embodiment of the design, the user can gain access to the bypass for maintenance, for example to remove a blockage.

An air valve 2224 is provided in the inlet to prevent the recirculation pump and/ or the drainage pumps from drawing water out of a connected washing machine, to ensure that there is sufficient water left in the washing machine.

Figure 26 shows the arrangement of the electronic control system of the unit, mounted on a PCB 2601. Two sensors are provided; i) a capacitive sensor in the inlet or other areas of the ducting depending on the control method and software logic, which detects the presence of effluent and ii) a pressure differential sensor that is arranged to measure the difference in pressure

between the two sides of the mesh. The pressure differential sensor can be used to indicate a difference in pressure between each side of the mesh. This can be used to monitor the health of the system and can be used to provide feedback to the logic, such as indicating if the mesh is soon to blind over with debris and regeneration should be activated. A microswitch 2602 is provided that detects when the jug is fully located in the unit. Any other type of sensor may be used to detect mechanical movement, such as an IR sensor. If the jug is not located and the unit is switched on, then an alarm is sounded to alert the user to locate the jug before use. This can also be operated on a timer so that during maintenance the user is reminded to replace the jug and not leave the unit disassembled.

The capacitive sensor is a type of fluid sensor; any other type could be used, such as a float switch.

The electronic system is arranged to operate the unit in numerous modes involving different combinations of sensors and software logic, to optimise the system operation or vary it for differing regional, user, functional or cost requirements. For example, only a capacitive sensor could be used (no pressure sensor) to reduce the number of components and cost. The following are examples of modes of use:

Example 1 – Capacitive Sensor and Pressure Sensor

Active Filtering:
If the capacitive sensor indicates that there is effluent present at the inlet (i.e. that the washing machine is emptying) and the pressure sensor indicates that the mesh has blinded over, then the drainage pump can be activated to aid draining of the unit and the recirculation pump is activated to spray the mesh to remove the debris and regenerate the pressure consumption. Active filtering may run for a set time once it has been triggered.

Passive Filtering:

If the pressure sensor indicates that the pressure differential is below a threshold and the capacitive sensor is triggered, then passive filtering is initiated. This is where the recirculation pump is turned off but the drainage pump may be operated.

Drainage Cycle:
If the capacitive sensor indicates that effluent at the input has ceased, then the recirculation pump is operated after a delay, which could be around 100 seconds, to clean the mesh; this delay can be adjusted. Shortly after, for example 2 seconds, the drainage pump is operated to drain the system. The recirculation pump is then turned off after, for example, a further 3 seconds and then the drainage pump is turned off after, for example, 10 seconds.

Standby:
If the capacitive sensor is low, then the recirculation and drain pump can both be turned off.

Example 2 – Capacitive Sensor only
The capacitive sensor is provided on the inlet pipe. When water is detected the pumps are activated until water is not detected anymore. The pumps are programmed to overrun by a predetermined number of seconds to clean the mesh and drain the filter.

Example 3 – Capacitive sensor with current monitoring on the drainage pump.

The capacitive sensor is provided on the inlet pipe. When water is detected, the drain pump is turned on. If current on the drain pump is low while the fluid sensor is reading high, then the recirculation pump is turned on. The recirculation pump is turned off after a predetermined time while the drain pump is left on.

Example 4 – Integrated in washing machine – Pressure Sensor only

The separator unit may be integrated into a washing machine or other textile processing apparatus. No fluid sensor is required as integration with the washing machine control logic enables the filter to know when water is being pumped into the filter. When fluid is pumped through the filter and the pressure sensor is low, the recirculation pump is not run, but the drain pump is activated. When fluid is being pumped through the filter and the pressure sensor is triggered, then the recirculation pump is run. The washing machine drain cycle can be paused at this point for a few seconds to increase the pressure consumption regeneration effectiveness.

The unit may be used to reduce the water consumption of an existing washing machine or other textile processing equipment, by recirculating the water from the output back into the washing machine. This is possible because the filter removes a high proportion of the debris from the effluent and is therefore very clean. A unit that is integrated into a washing machine could provide this functionality too.

The separator unit could be integrated into a washing machine and used to replace the conventional filter that is used to prevent debris from reaching and damaging the washing machine pump. Furthermore, by replacing an existing filter with the advanced filtering technology disclosed herein, a different washing machine pump could be used altogether, one that operates at a higher efficiency.

A separator may be provided where the inlet feeds the interior of the sieve structure and the outlet collects filtered effluent from the outside of the sieve structure.

The separator housing may be opened to empty the trap when the effluent has been drained.

An opening at the top of the sieve structure may be provided to avoid air locks.

An air inlet may be provided at the inlet of the separator to avoid syphoning all of the waste water out of a washing machine.

As an alternative to regenerating the pressure of the separator unit, a disposable cartridge may be provided. The part of the separator that contains the filtering element, i.e. the sieve structure, could be provided as a cartridge, that is removed and disposed of and replaced with a new one. Alternatively, the cartridge could be sent for cleaning or cleaned by the user and then re-used.

Wastewater expelled from textile factories is contaminated with microfibres and it is not guaranteed it will be filtered at municipal facilities. When these facilities exist, they may remove up to 98% of microplastics, however what escapes still equates to millions of microfibres every day. Microfibres removed from water may then be passed to the environment as "sewage sludge", spread on agricultural land as fertiliser. Ultimately microfibres are passed as pollutants into the natural environment - they need to be stopped at source.

Wet-processing factories currently operate in a linear system, whereby microfibre resources are expelled as pollutants from the technical process into the biological environment. Use of the separator system described herein closes the loop into a continued cycle to retain the value of the microfibres within the technical process and stop damage to the biological environment.

An embodiment of the separator system can be retrofitted onto the existing wastewater outlet of wet-processing textile factories to enable microfibre capture at source before pollution of the natural environment can occur.

The separator system can be used to filter microplastics and other micropollutants from environmental drainage systems, such as roadside gullies. A lot of microplastics in the environment break down from larger items of plastic such as car tyres, road surfaces and road markings. After synthetic

textiles, tyres are the largest source of microplastics and contain harmful materials such as mineral oils.

Catalytic converters are fitted on most cars and contain highly valuable materials such as platinum, palladium, copper and zinc. During use, small amounts of these metals are lost from cars and fragments are deposited on the road surface. While metal concentrations vary geographically, collection and recycling of these materials not only reduces environmental pollution but can also be a revenue stream in a circular economy.

A larger-scale embodiment of the invention can be applied to the treatment of effluent in Wastewater Treatment Plants. For example, the chamber of the separator could be 1 meter in diameter or 2 meters or greater.

Typical sewage networks are built along one of two designs:
i) Combined sewers. These collect surface water and sewage together, meaning all waste water passes through a Wastewater Treatment Plant (WWTP). During heavy rainfall, it is common for sewers to overflow, releasing untreated sewage and pollution into waterbodies.
ii) Separate sewers. These discharge surface water directly into waterbodies.

In both systems, roadside runoff, i.e. surface water from the roads, is released into the environment.

Most roadside gullies have drains located at regular points and these drains have a sediment “pot”, which lets heavy materials like gravel and sand settle to prevent blockage. These hold some micropollutants, but the majority of microplastics and valuable metals are too small and are not retained.

An embodiment of the separation system of the present invention can be retrofitted as an insert into the sediment pot of a drain to filter micropollutants at source. It is designed to fit existing gullies and to be emptied using a mobile vacuum pump.

In another embodiment the system can be used as part of a filtration system for maritime waste disposal. At sea shipping vessels dump wastewater contaminated from activities on the ship, which include microplastic from various sources. The filter system can be applied to filter this effluent prior to disposal and thus combat this pollution source.

CLAIMS

1. A separator suitable for separating solid material from a fluid, the separator comprising:
a chamber with an inlet and an outlet,
a sieve structure forming a permeable barrier between the inlet and the outlet to filter the fluid,
and a pump in fluid communication with the chamber, wherein the separator further comprises a filter pressure regeneration apparatus for dislodging filtered material from the sieve structure,
wherein the filter pressure regeneration apparatus comprises a conduit and a nozzle assembly having at least one cleaning jet and wherein the pump is arranged to recirculate the filtered fluid to the conduit of the filter pressure regeneration apparatus.

2. The separator of claim 1, wherein the pump is a water pump arranged to also drain the separator or a separate pump is provided to drain the separator.

3. The separator of claim 1 or 2, wherein the at least one cleaning jet is for directing fluid towards the outlet side of the sieve structure.

4. The separator of claim 1 to 3, wherein a restriction is provided in a conduit downstream from the pump, wherein the aperture of the restriction is set to ensure that a preset amount of filtered fluid is recirculated into the filter pressure regeneration apparatus and an amount of the filtered fluid is drained.

5. The separator of any preceding claim, wherein an air vent is provided in a conduit between the pump and the filter pressure regeneration apparatus to introduce air into the conduit.

6. The separator of any preceding claim, wherein the separator further comprises an air pump located between the pump and the filter pressure

regeneration apparatus to introduce air into the conduit and to drain the separator.

7. The separator of any preceding claim, wherein the water pump is a positive displacement pump

8. The separator of any preceding claim, wherein the water pump is a centrifugal pump.

9. The separator of any preceding claim, wherein the chamber is cylindrical and the sieve structure is a coaxial cylinder within the chamber and wherein a wall is provided to one side of the inlet such that the fluid is guided around the sieve structure through a channel such that filtered material is dislodged by the wash water from the cleaning nozzle accumulates on the side of the wall away from the inlet.

10. The separator of any preceding claim, wherein a trap is provided comprising an opening in the base of the channel to a sub-chamber, where the accumulating filtered material can be collected.

11. The separator of any preceding claim, wherein the nozzle assembly comprises a plurality of cleaning nozzles that are rotatable around the central axis of the sieve structure.

12. The separator of any preceding claim, wherein the nozzle assembly is rotated by propulsion nozzles arranged to direct a stream of water having a vector that is tangential to the circumference of the sieve structure or offset from the central axis.

13. The separator of any preceding claim, wherein the chamber has a closed top and bottom.

14. The separator of any preceding claim, wherein a fluid detector is provided, and wherein the filter pressure regeneration apparatus is arranged to be activated in accordance with the output from the fluid detector.

15. The separator of claim 14, wherein a reservoir is provided below the chamber and the fluid detector is located in the reservoir.

16. The separator of claims 15, wherein the fluid detector is a float switch.

The separator of claims 14, wherein the fluid detector is a pressure sensor.

17. The separator of any preceding claim, wherein a bypass conduit is provided between the inlet and the outlet to provide an alternative route for fluid in the event that the flow of fluid is impeded.

18. The separator of claim 78, wherein the bypass conduit includes a pressure-activated valve.

19. A washing machine with a separator as claimed in claims 1 to 18.

20. The separator of claim 1, wherein the nozzle assembly comprises a nozzle arranged to direct a stream of fluid towards a rotatable plate, wherein the plate is arranged to rotate under the force of the stream of fluid and to project the fluid outwards towards the sieve structure.

21. A method of operating a separator as claimed in claims 1 to 20, comprising the steps of;
filtering fluid through a sieve structure,
operating a pump to pressurise the filtered fluid.

22. The method of claim 21, wherein the pump is operated to drain the separator.

23. The method of claim 21 or 22, wherein the pump is operated to recirculate the filtered fluid to a pressure regeneration apparatus that is arranged to spray the filtered side of the sieve structure with wash fluid to dislodge debris from the unfiltered side of the sieve structure.

5

Fig. 1

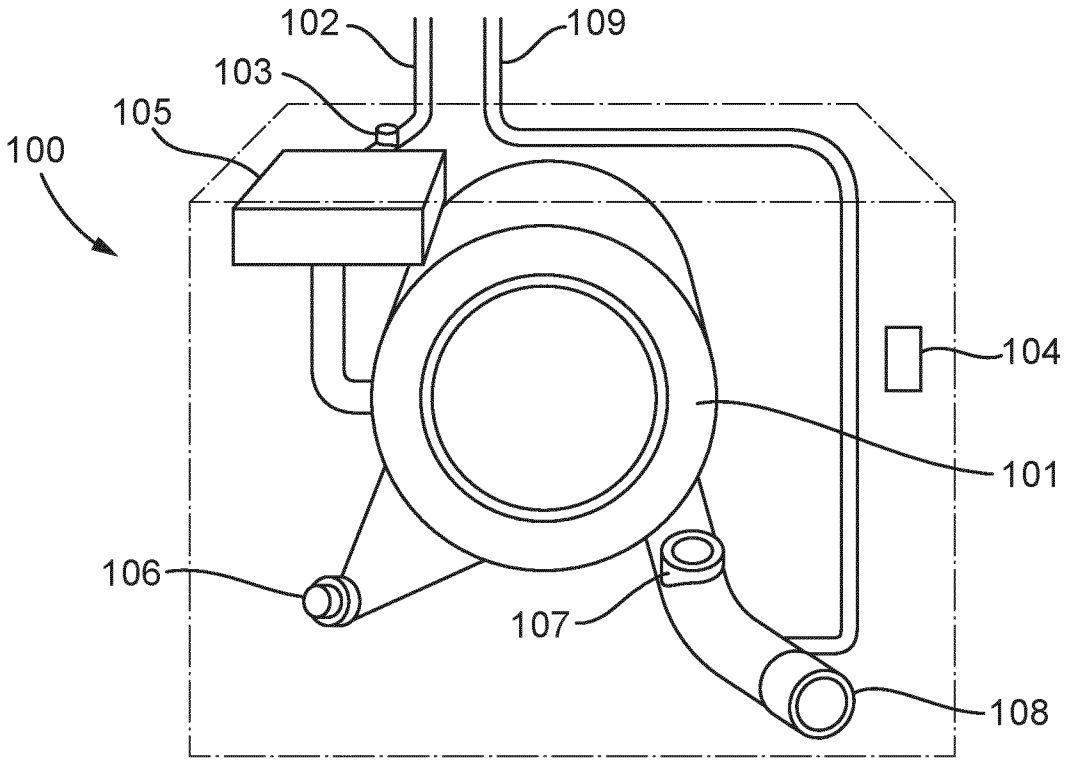

Fig. 2a

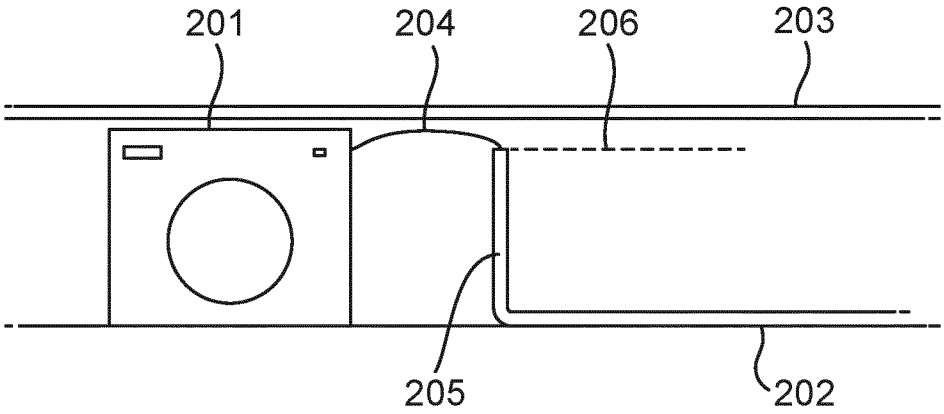

Fig. 2b

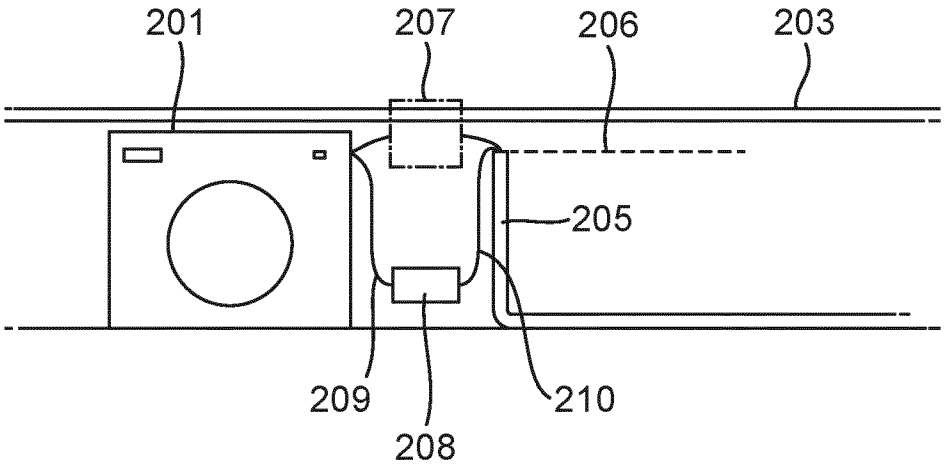

Fig. 3a

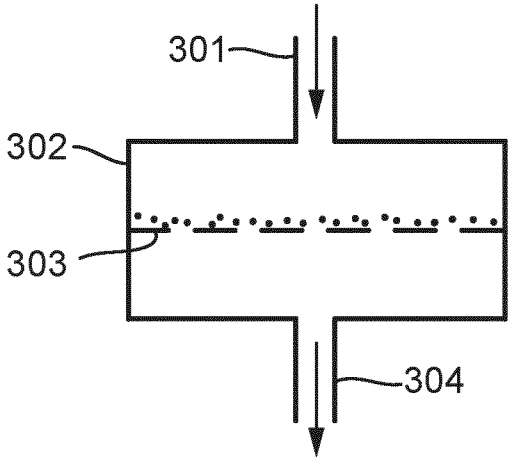

Fig. 4

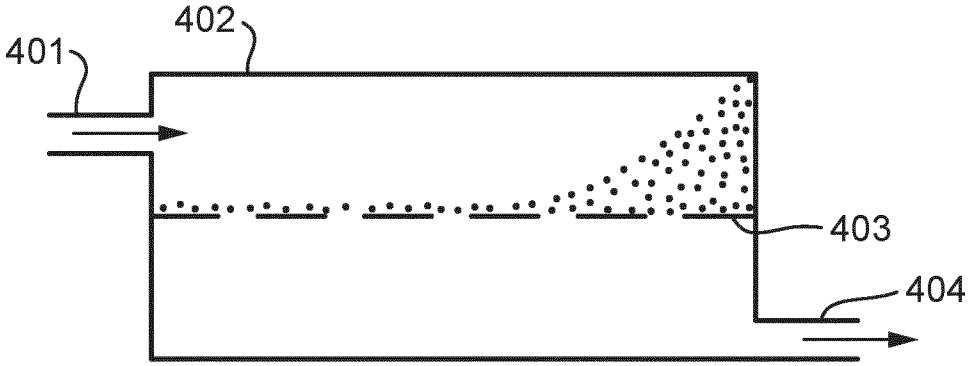

Fig. 5

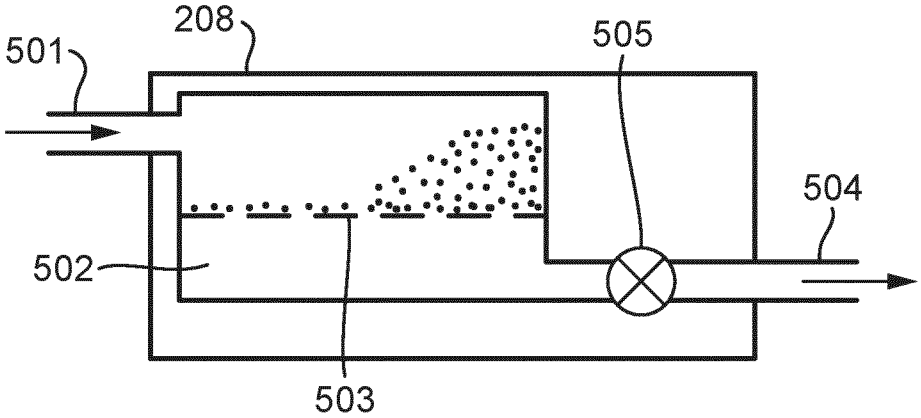

Fig. 6

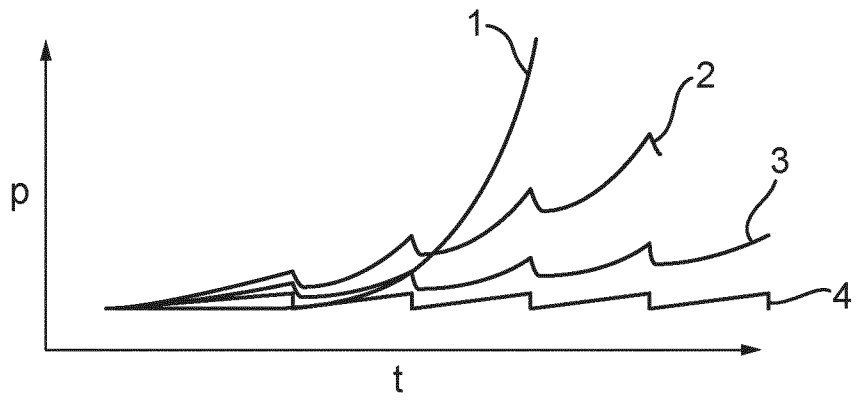

Fig. 7

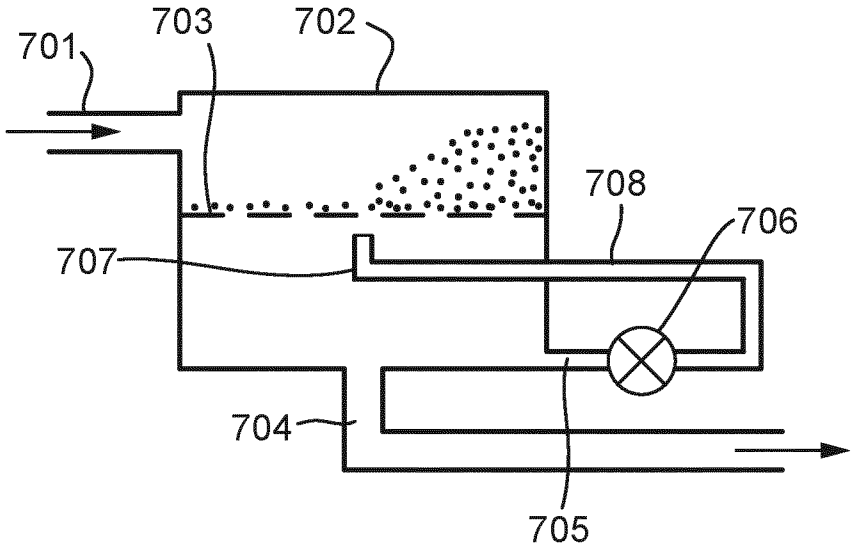
701
703
702
708
706
707
704
705

Fig. 8

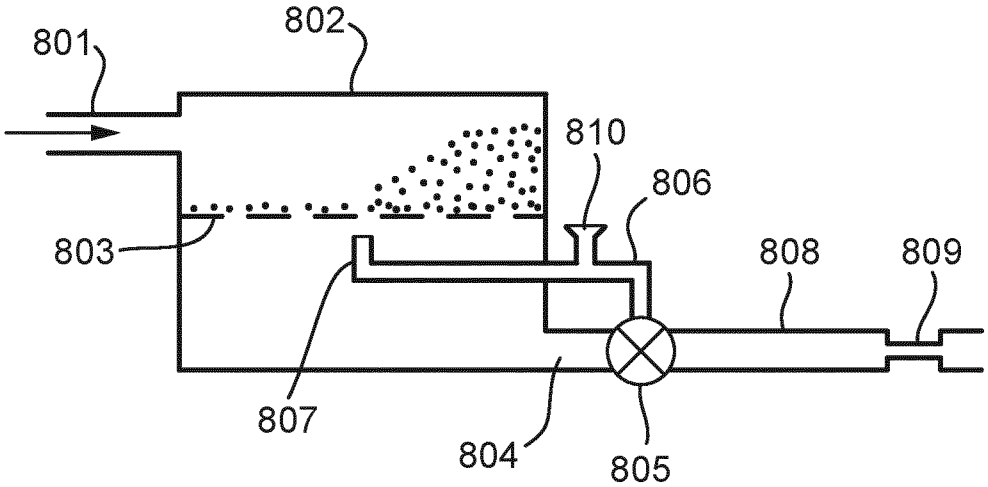
801
802
810
806
803
808
809
807
804
805

Fig. 9

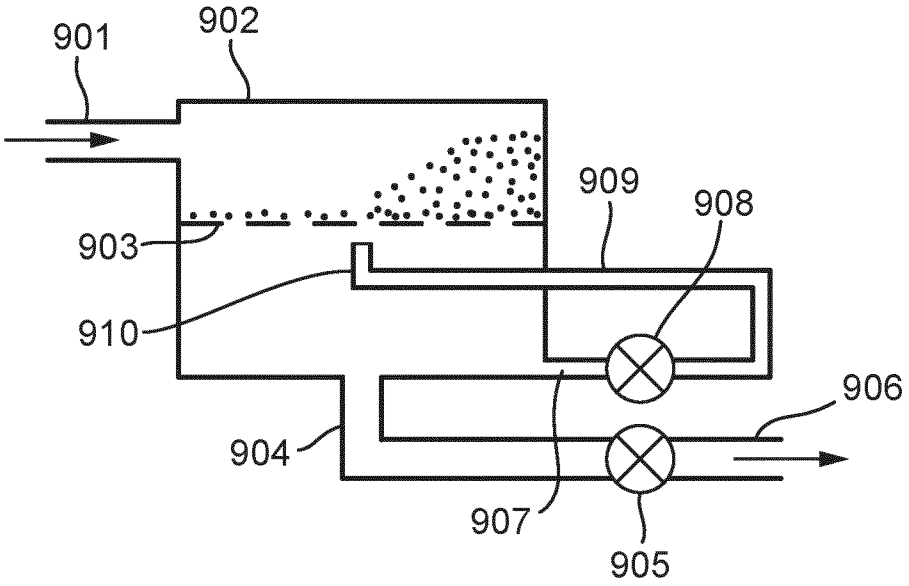
901
902
909
908
903
910
906
904
907
905

Fig. 10

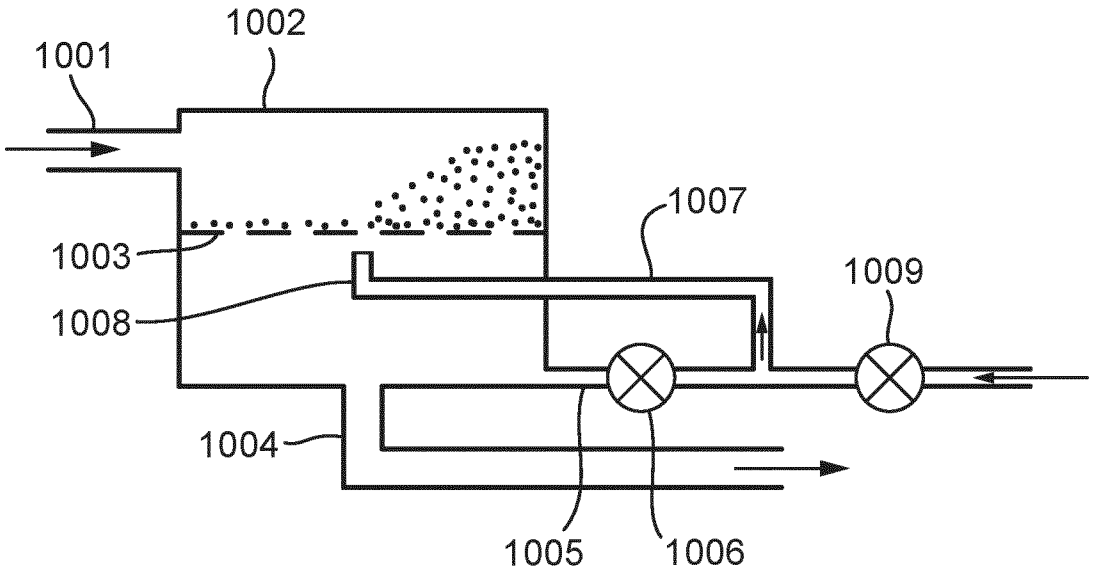
1001
1002
1007
1003
1009
1008
1004
1005
1006

Fig. 11

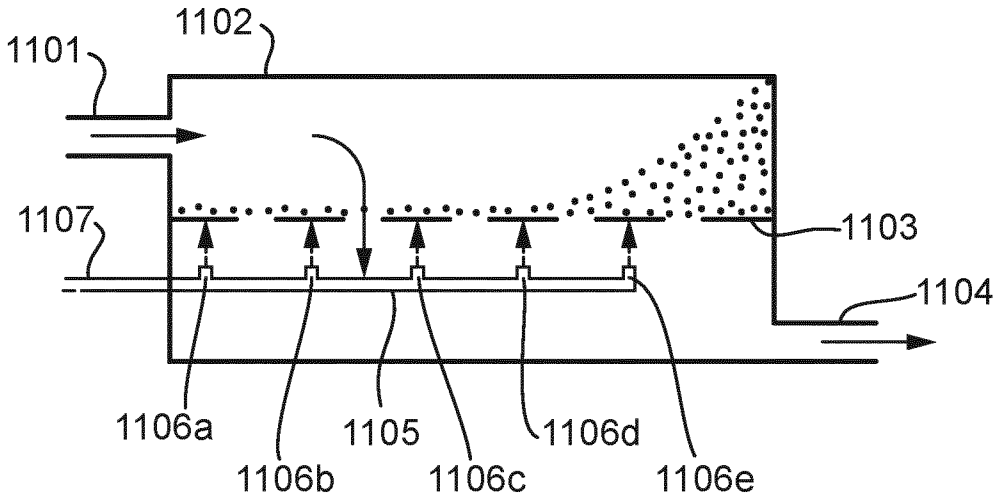

Fig. 12a

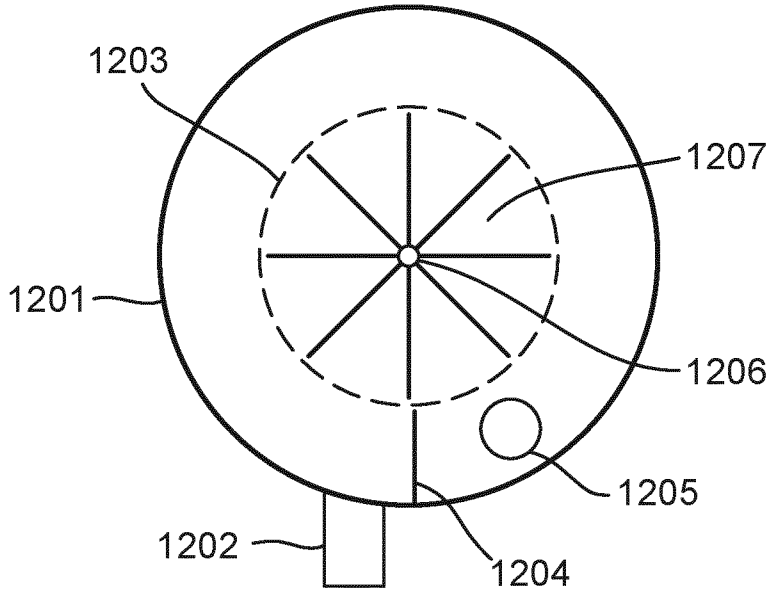

Fig. 12b

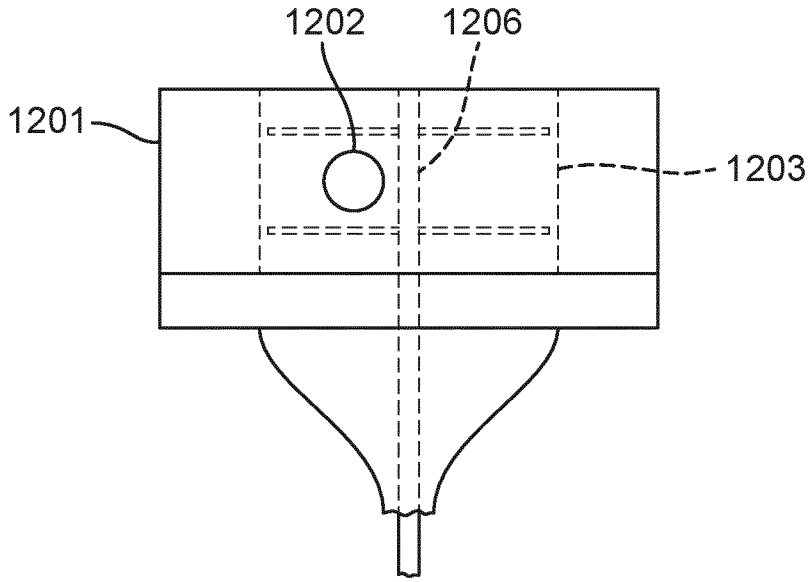

Fig. 13a

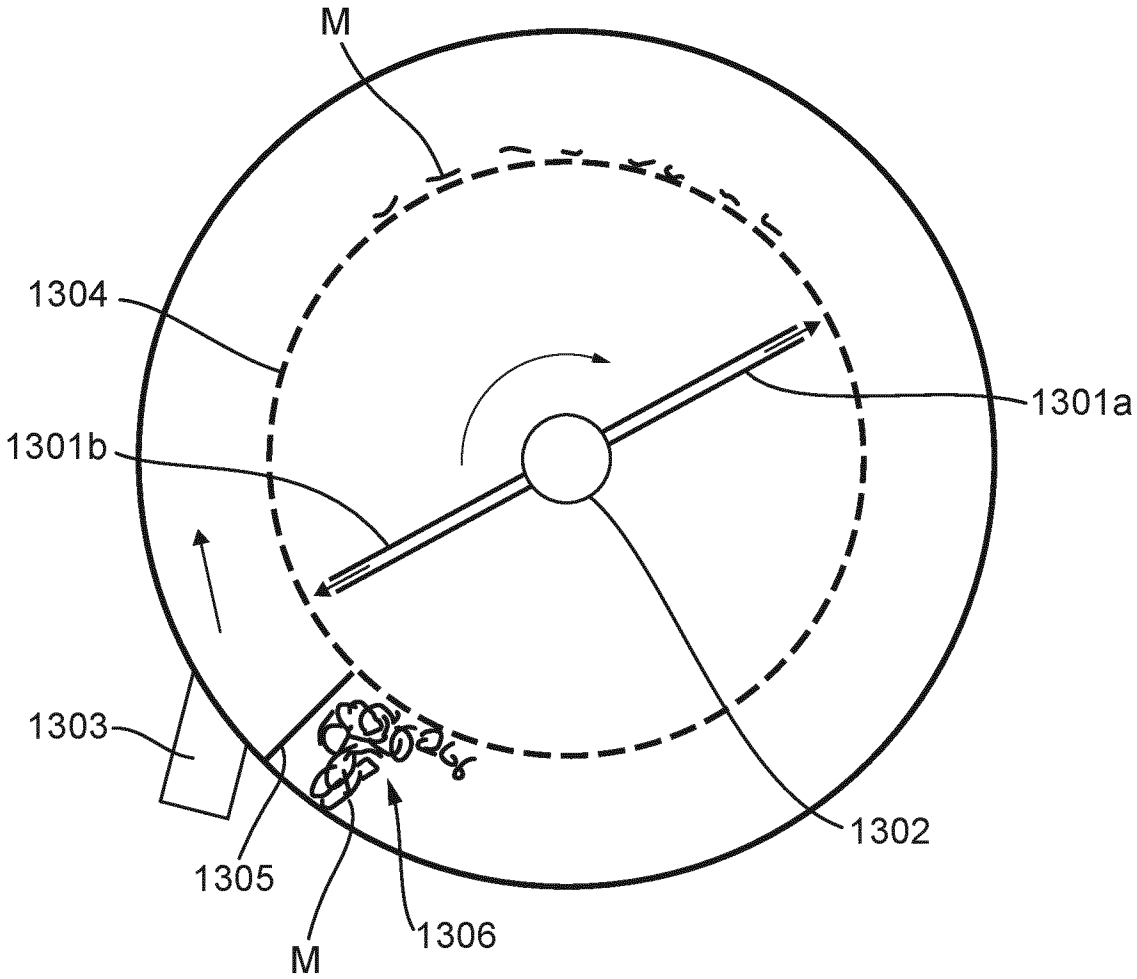

Fig. 13b

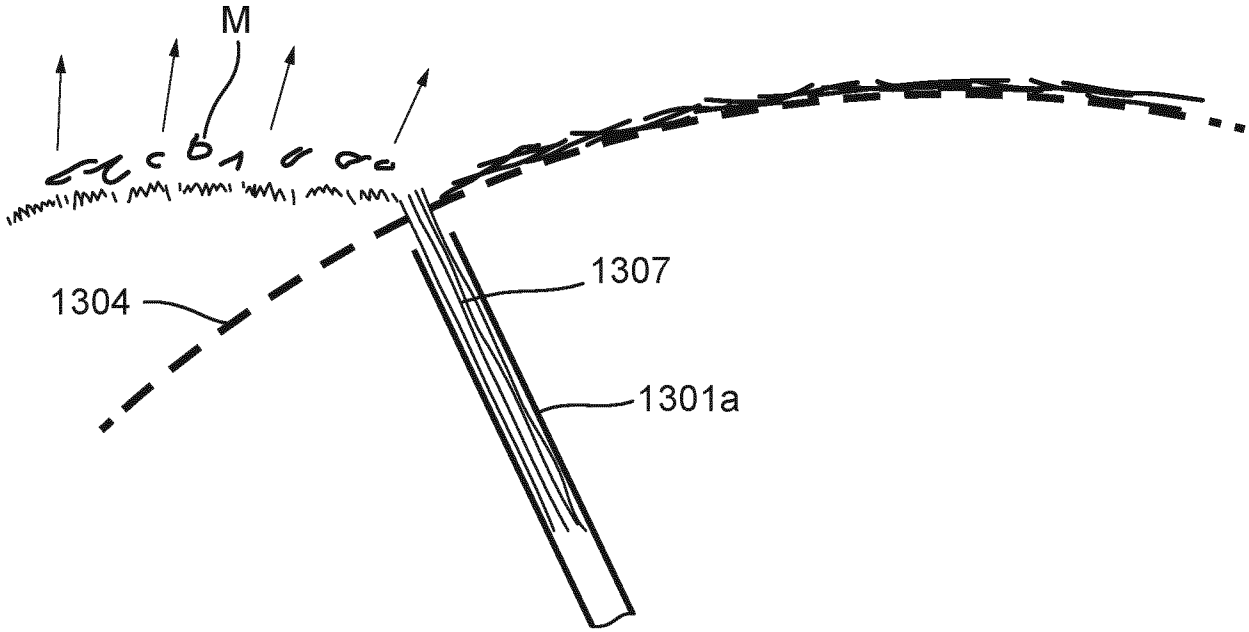

Fig. 13c

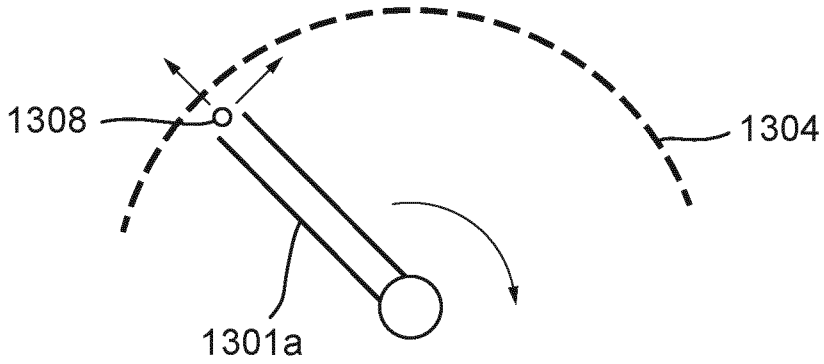

Fig. 14a

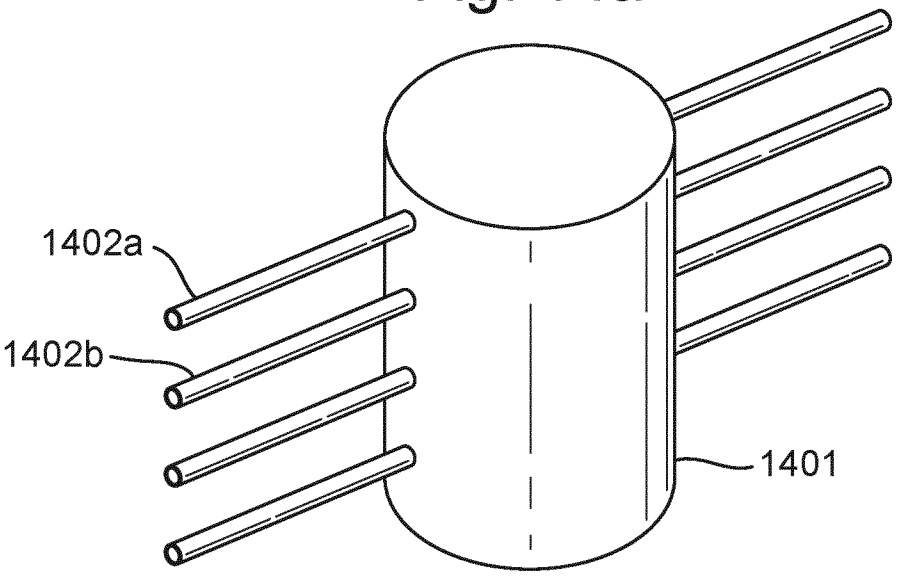

Fig. 14b

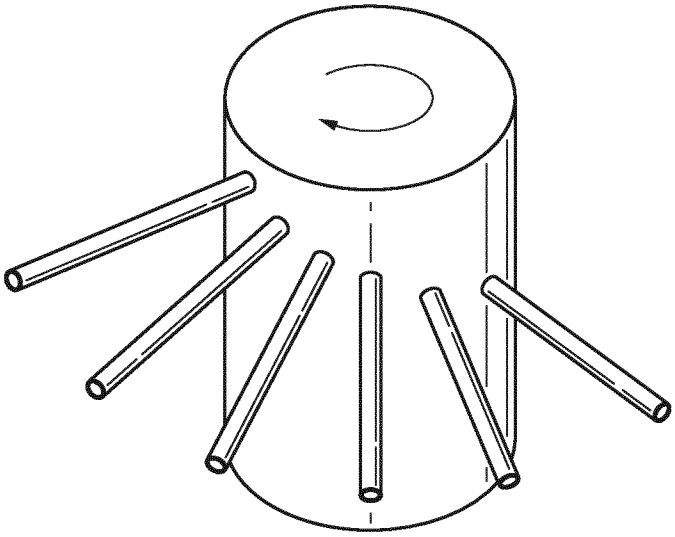

Fig. 15a

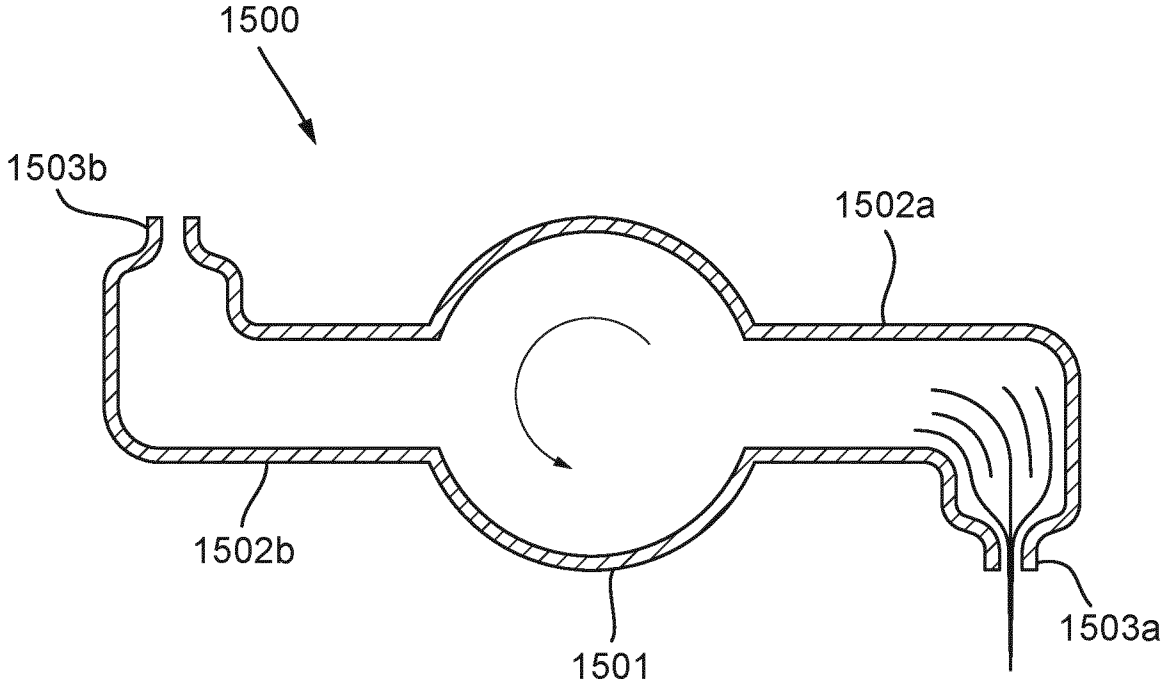

Fig. 15b

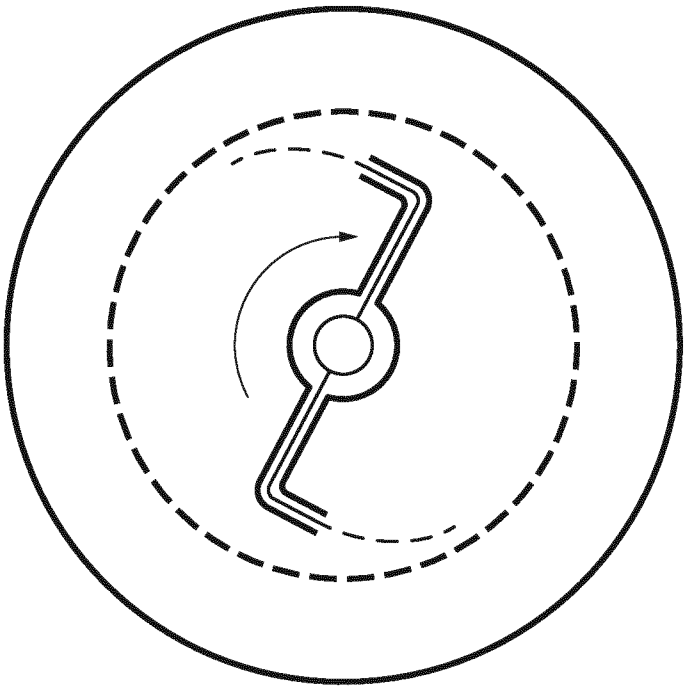

Fig. 16a

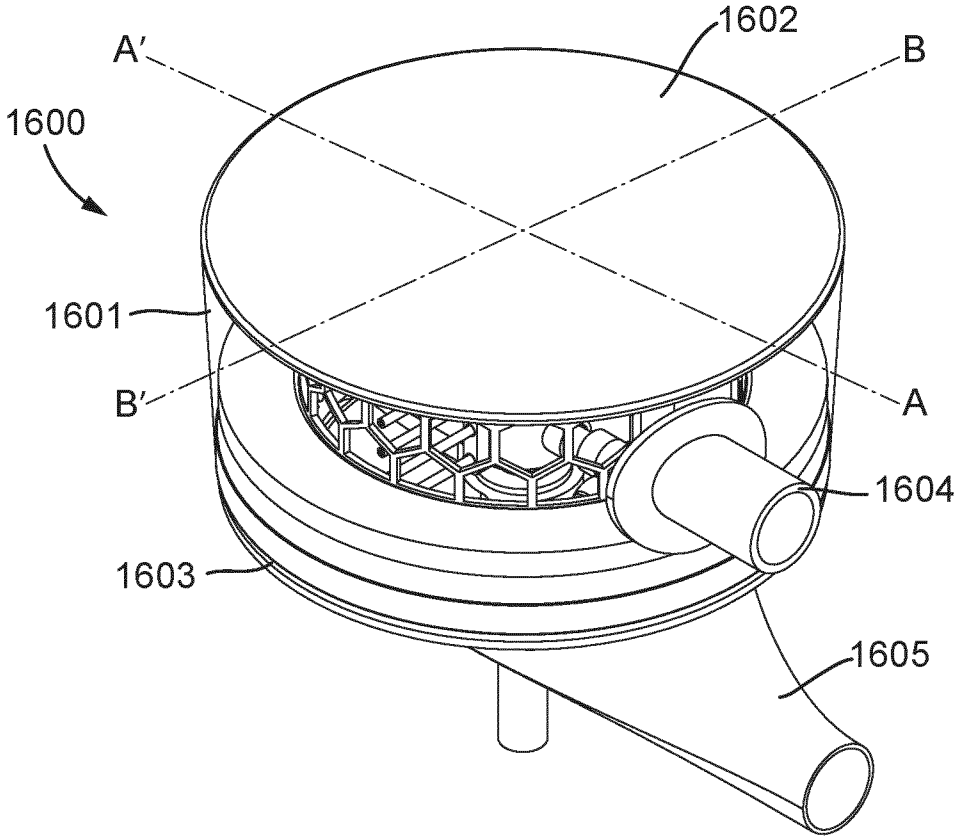

Fig. 16b

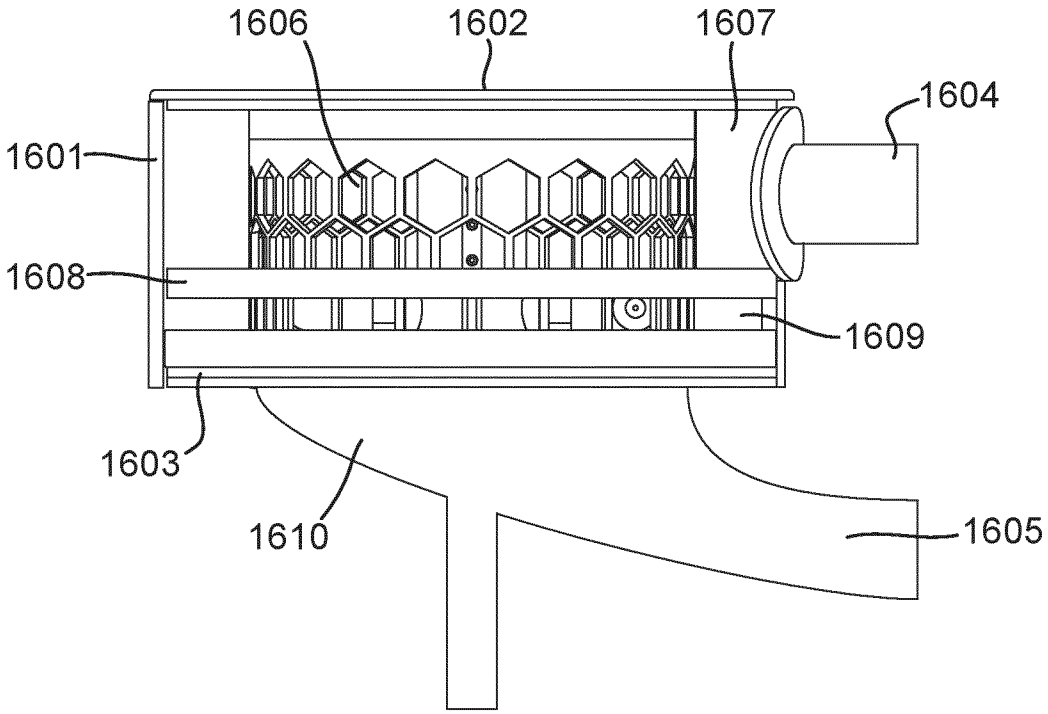

Fig. 16c

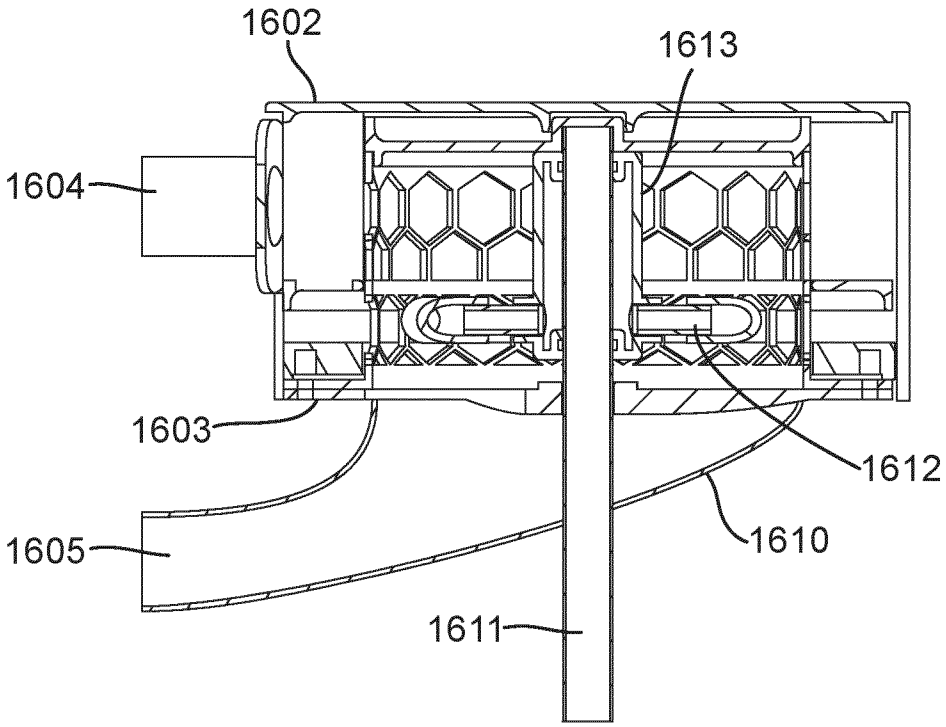

Fig. 16d

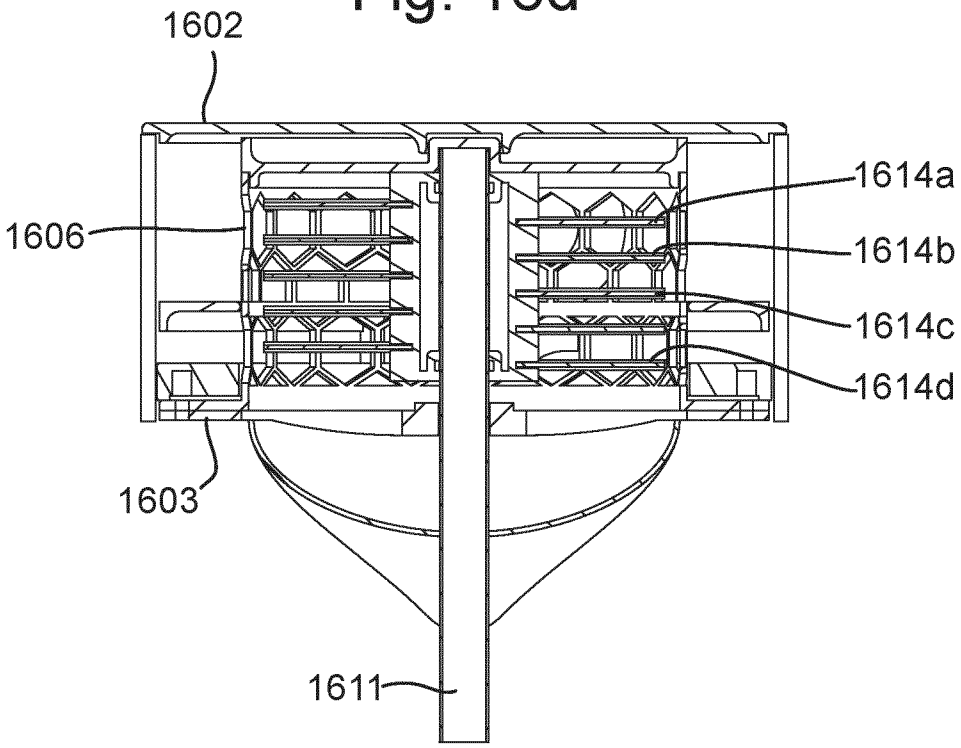

Fig. 17

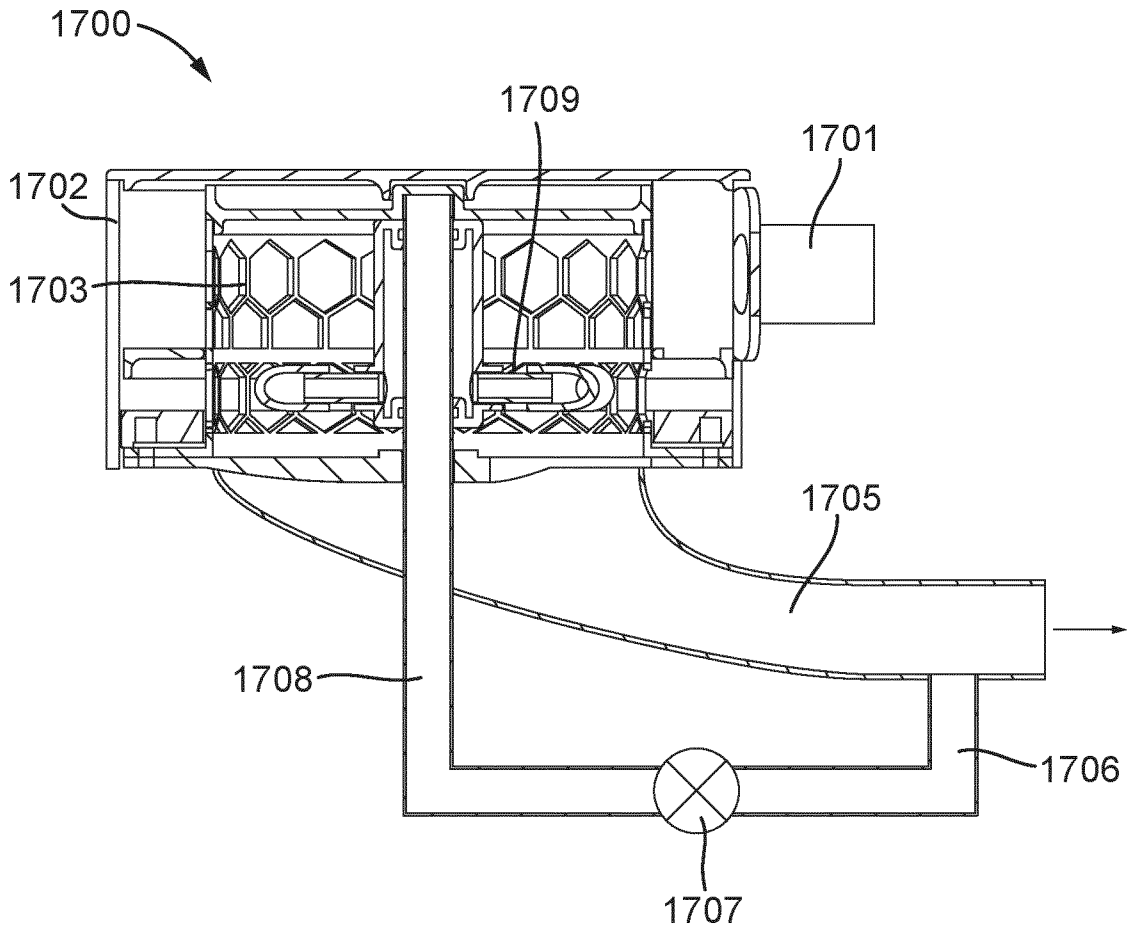

Fig. 18a

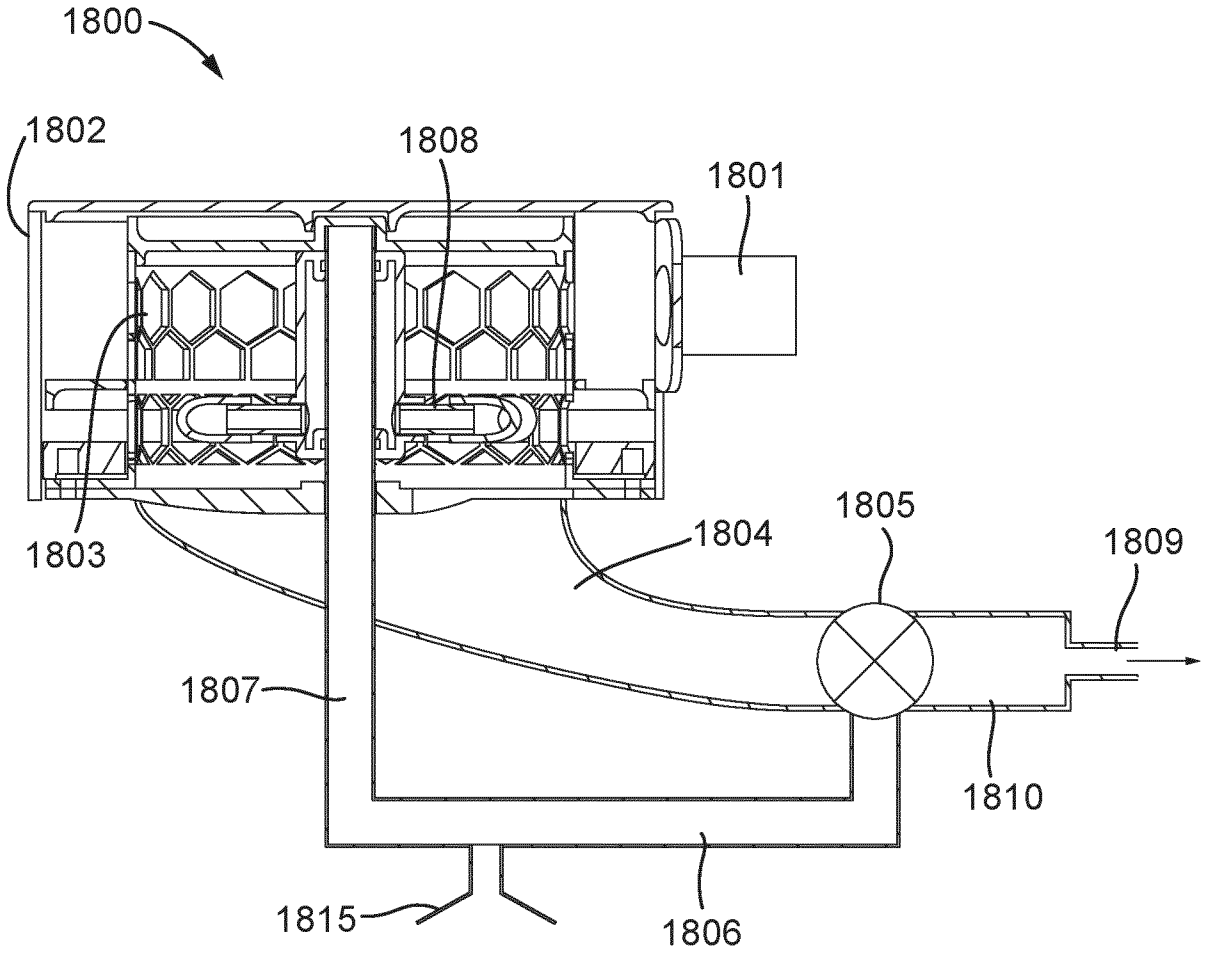

Fig. 18b

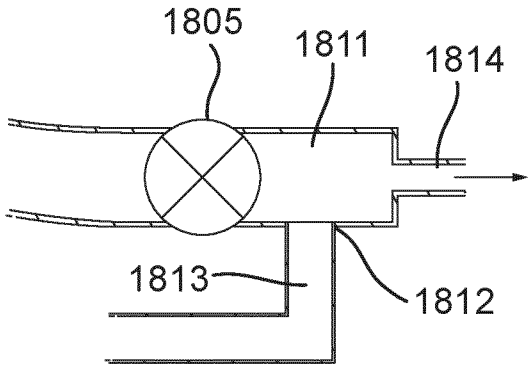

Fig. 19a

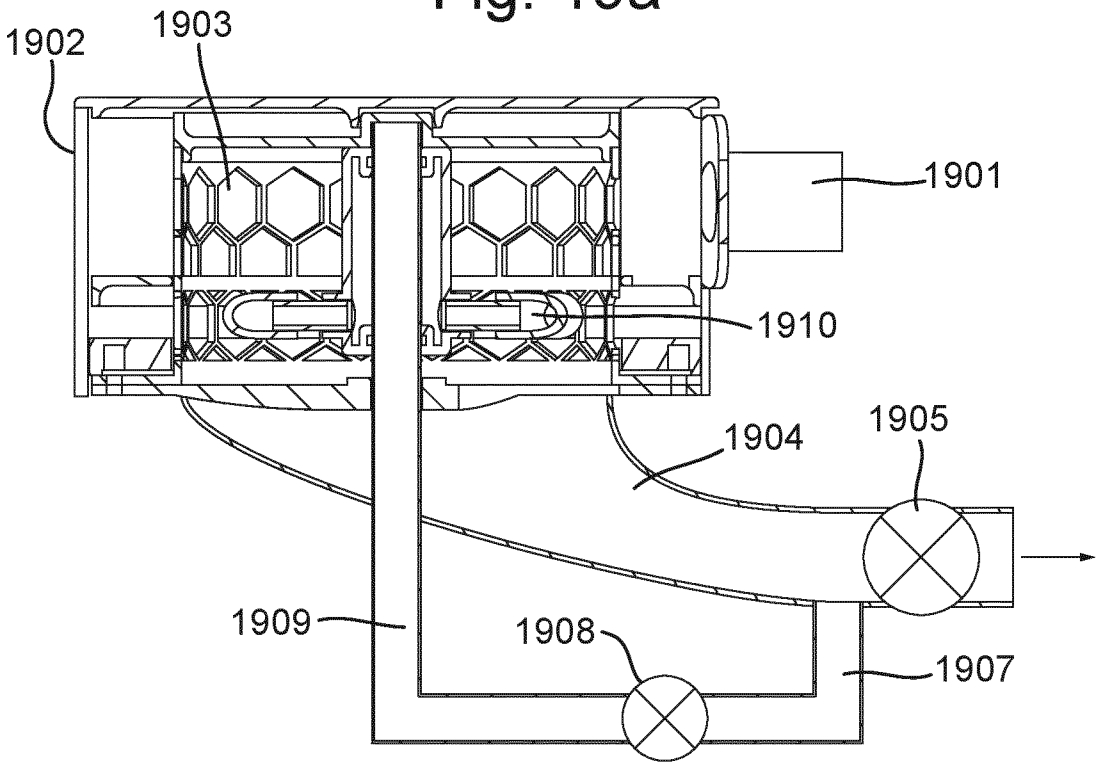

Fig. 19b

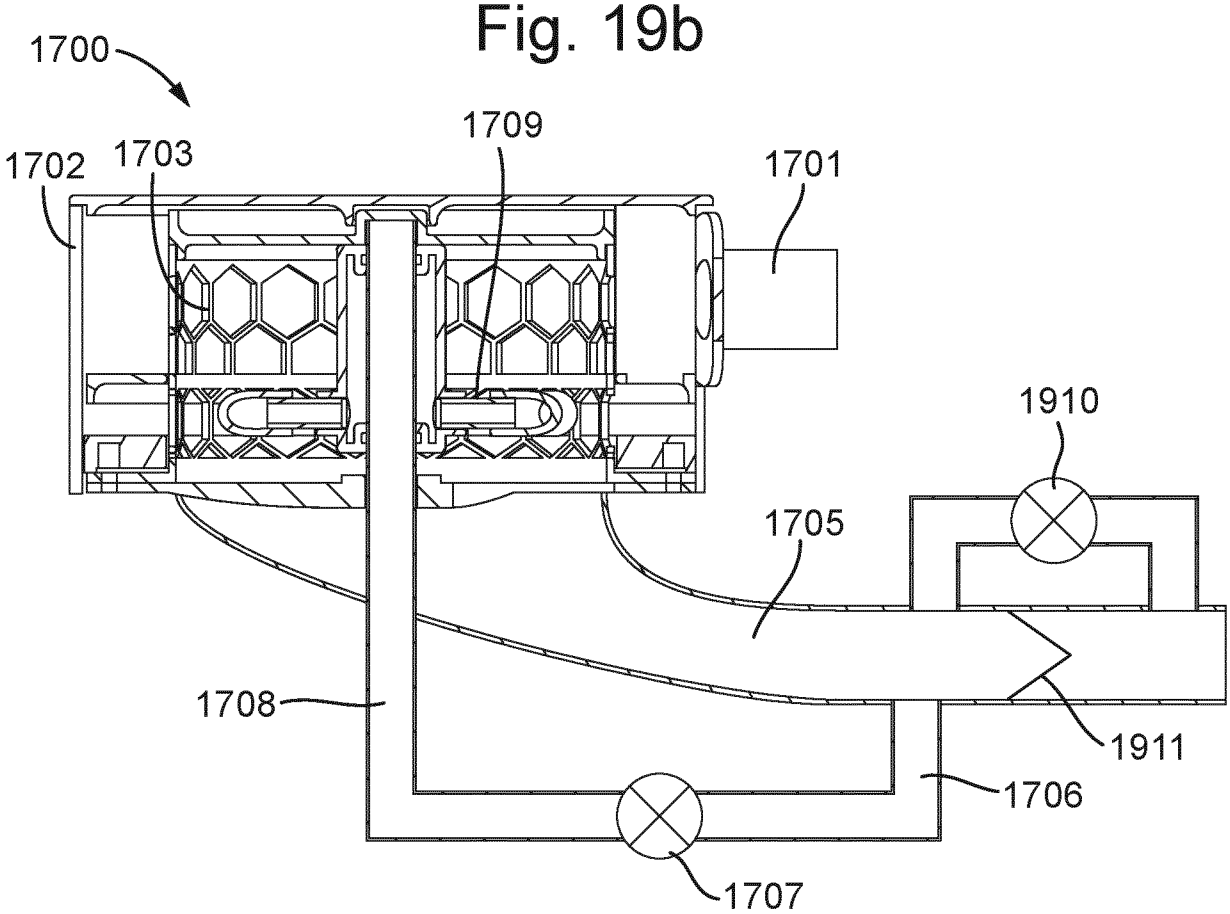

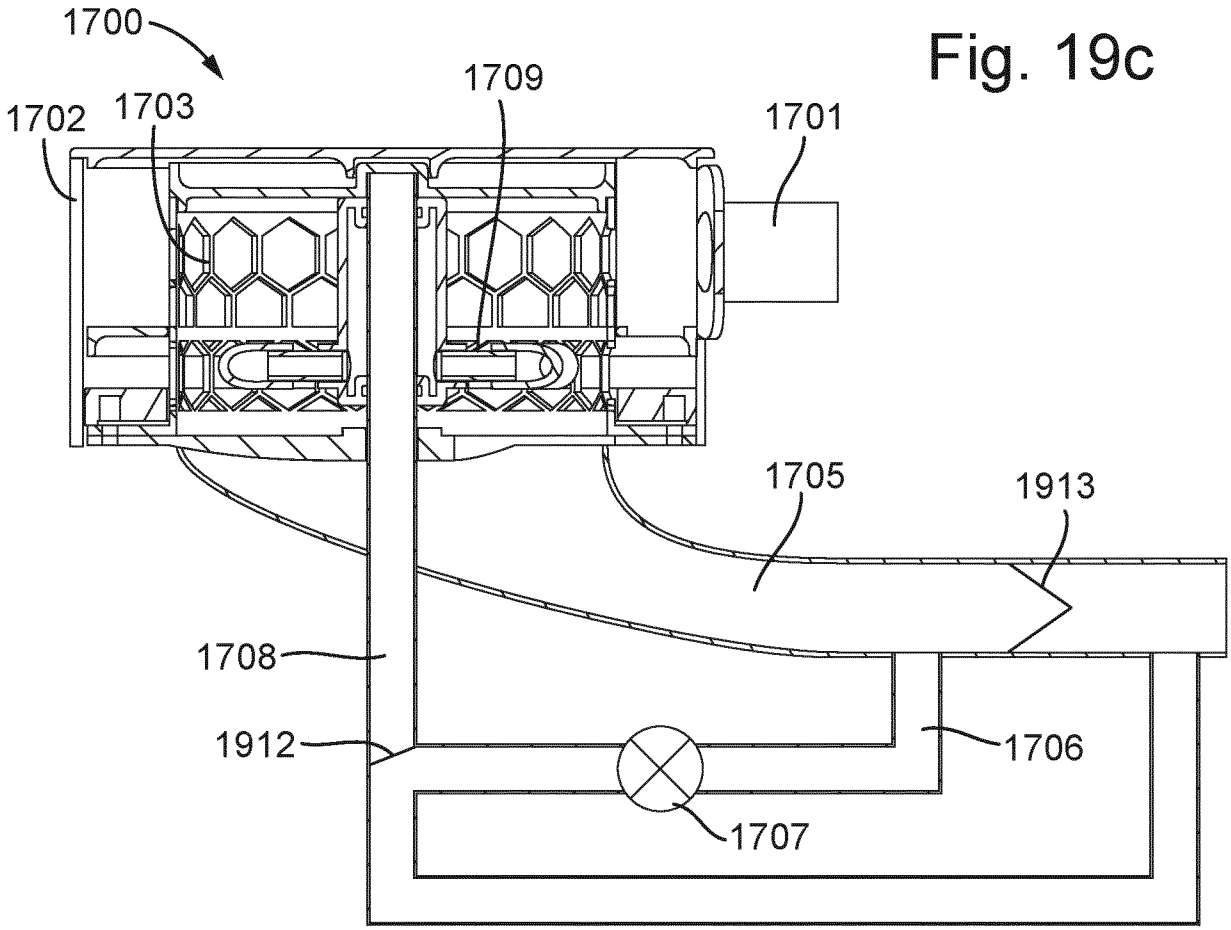

Fig. 19c

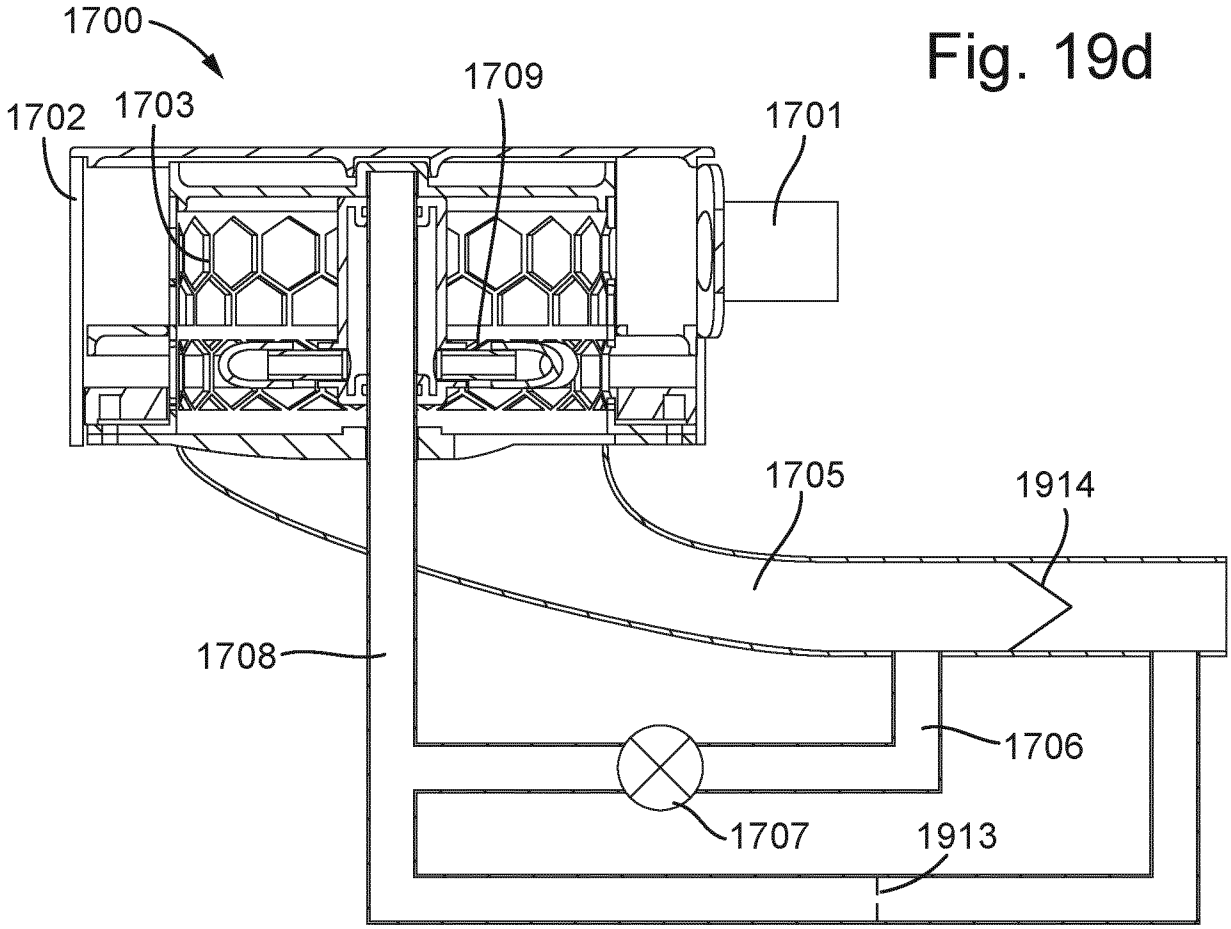

Fig. 19d

Fig. 20A

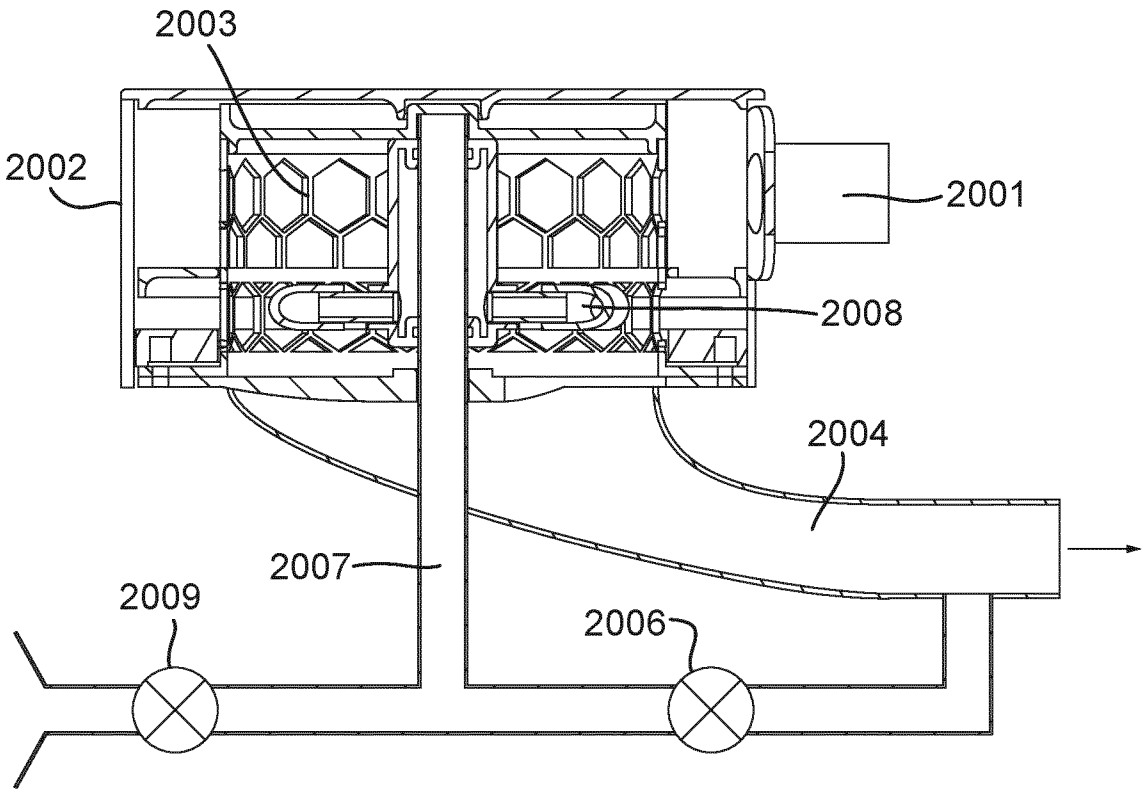

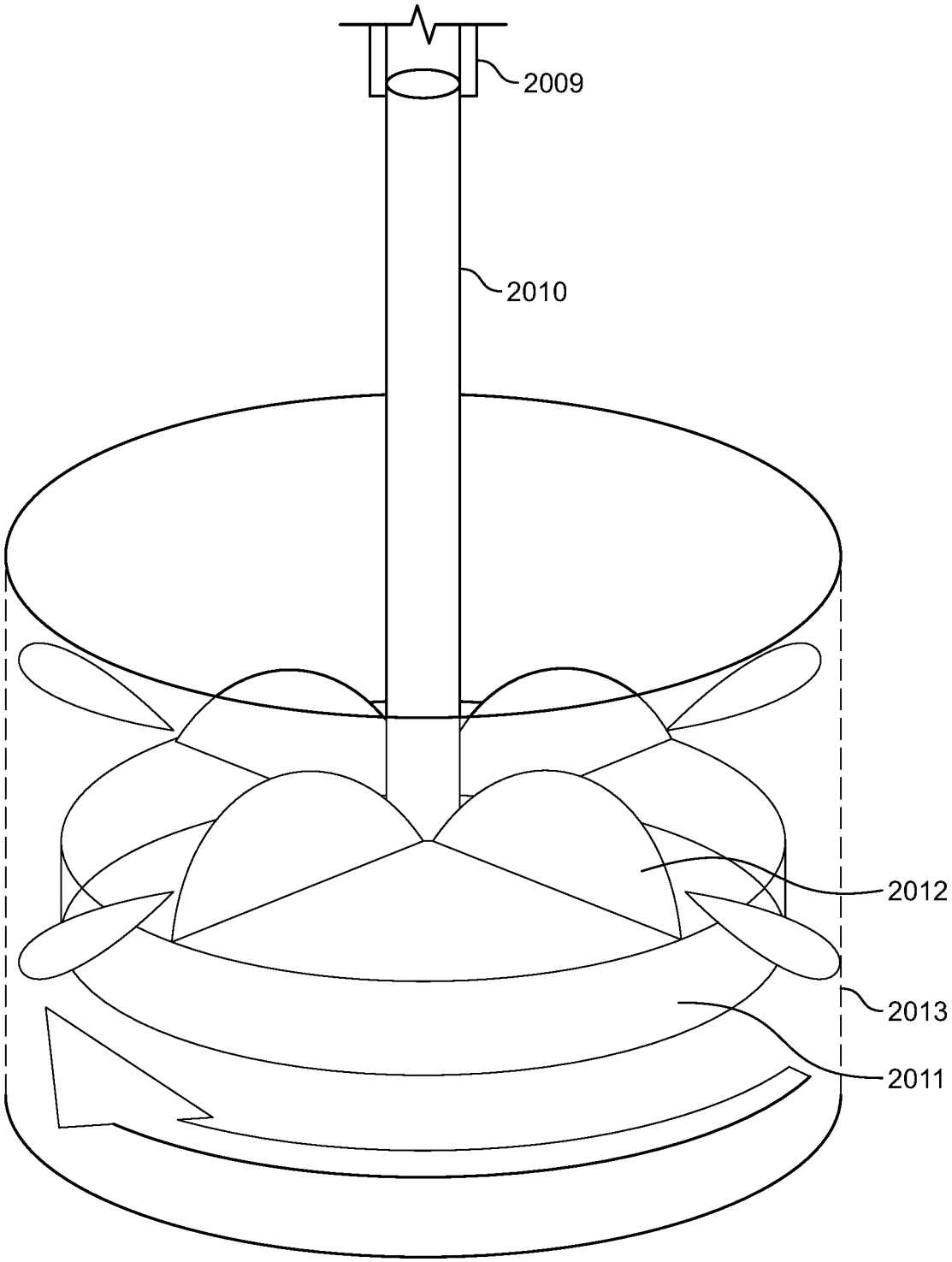

FIG. 20B

Fig. 21a

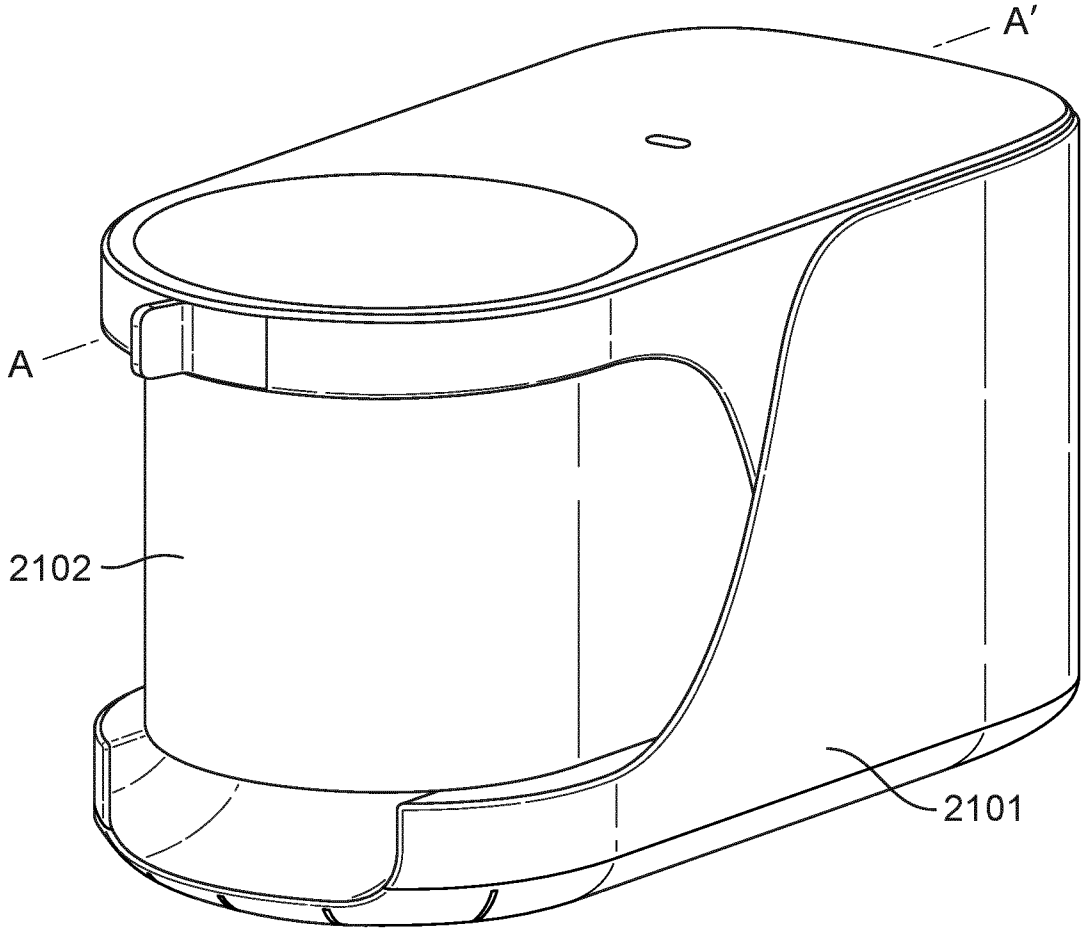

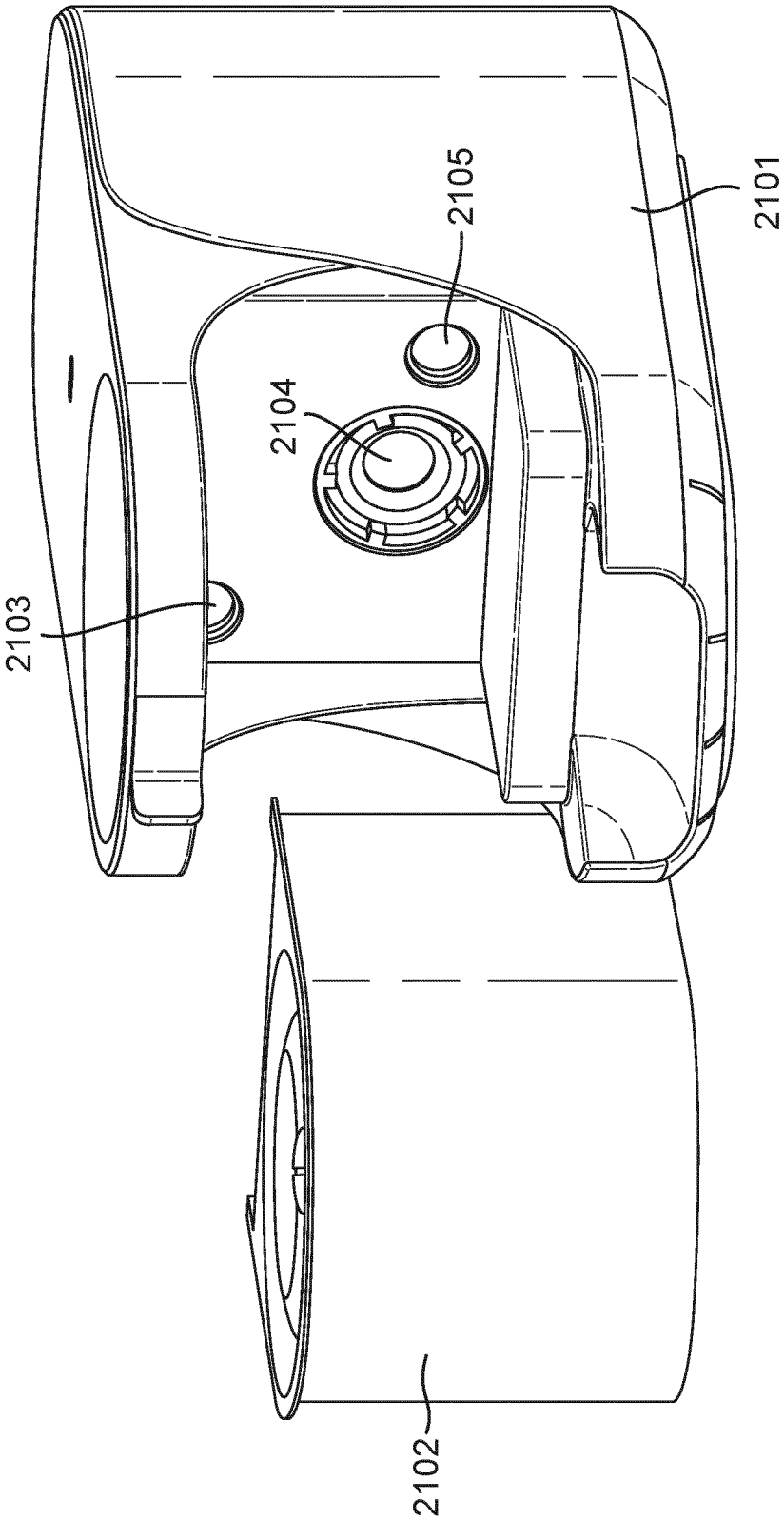

Fig. 21b

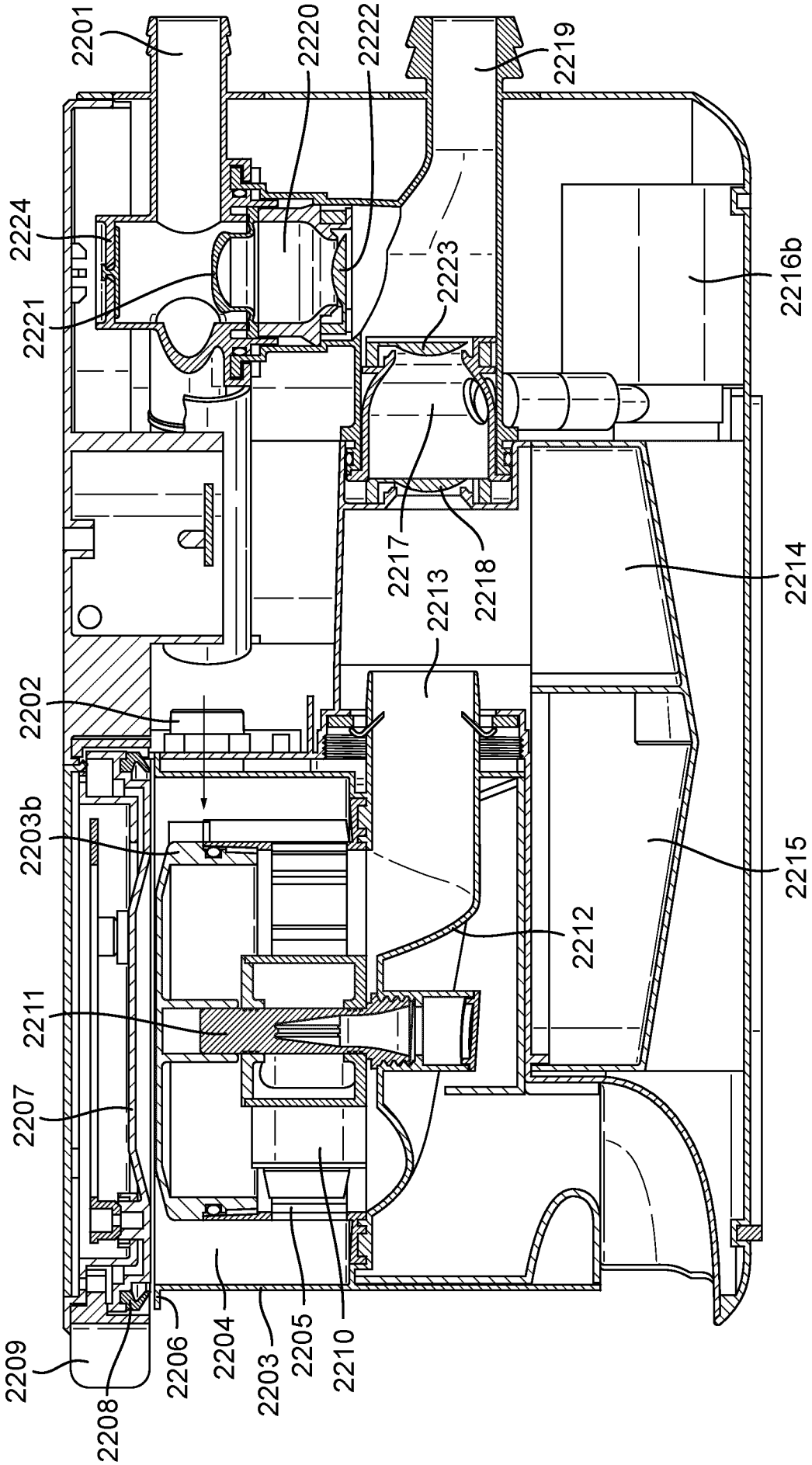
2201
2220
2222
2219
2224
2221
2223
2216b
2217
2218
2213
2214
2202
2203b
2215
2212
2211
2207
2209
2208
2206
2204
2203
2205
2210

Fig. 22a

Fig. 22b

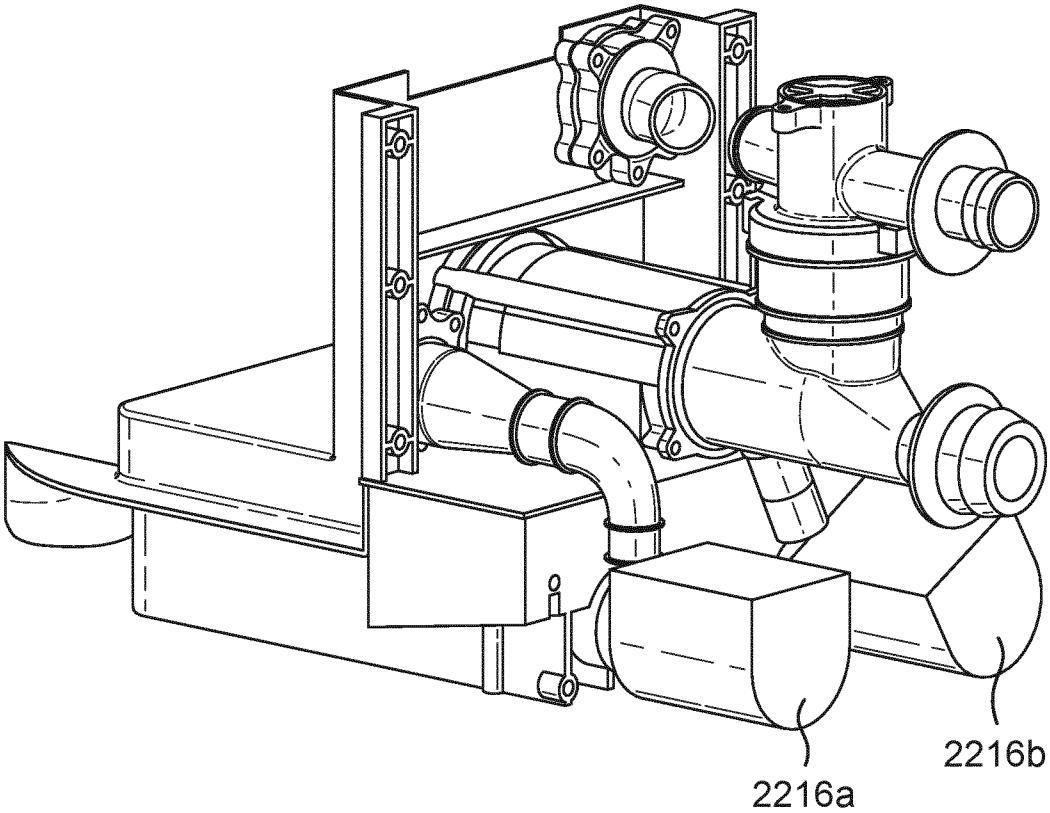

Fig. 23

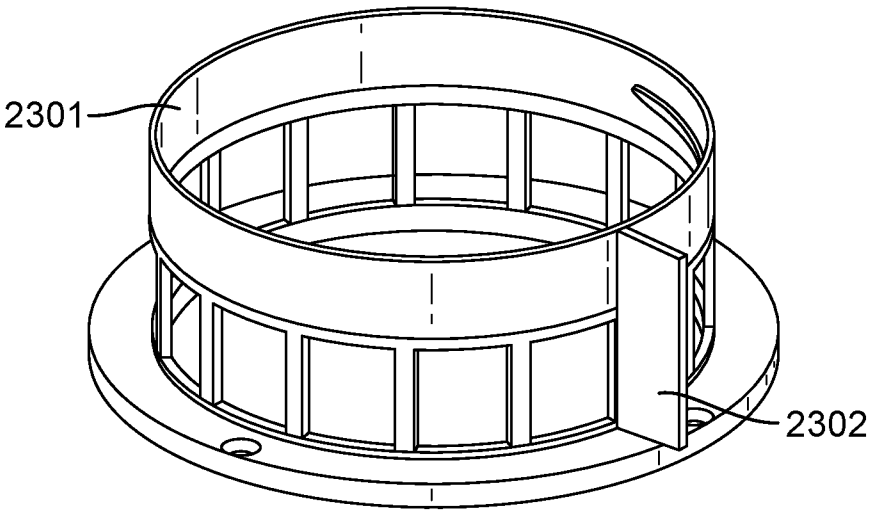

Fig. 24

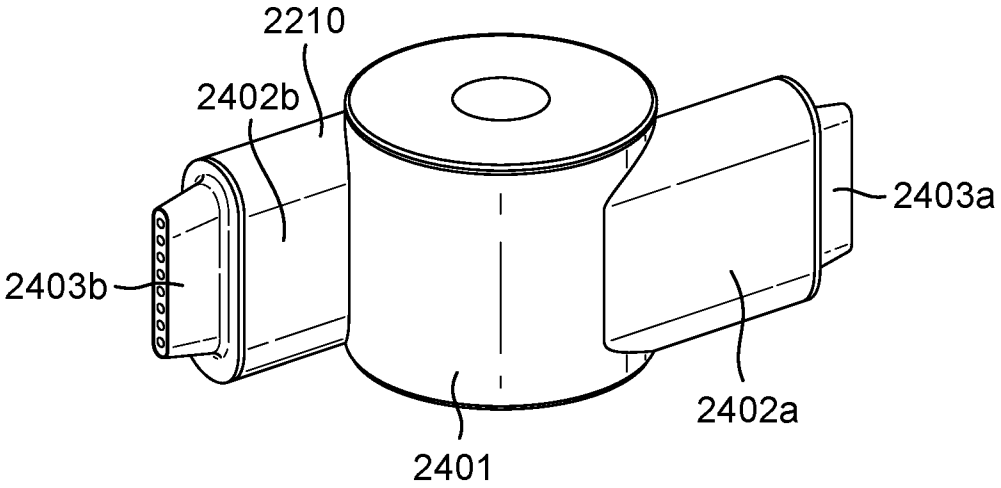

Fig. 25

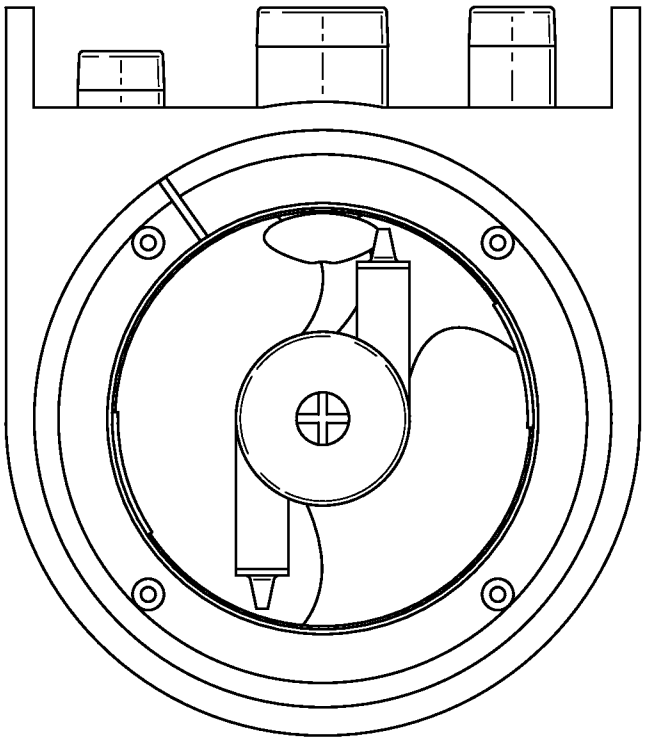

Fig. 26

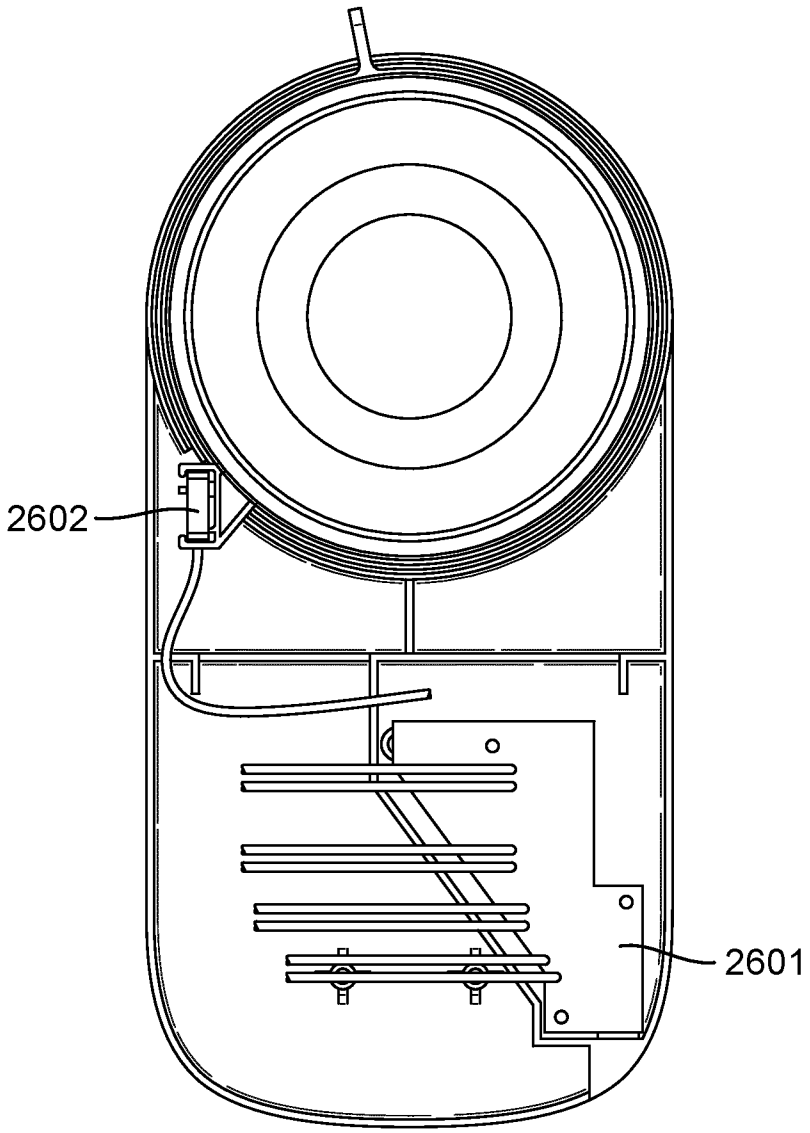

Fig. 27a

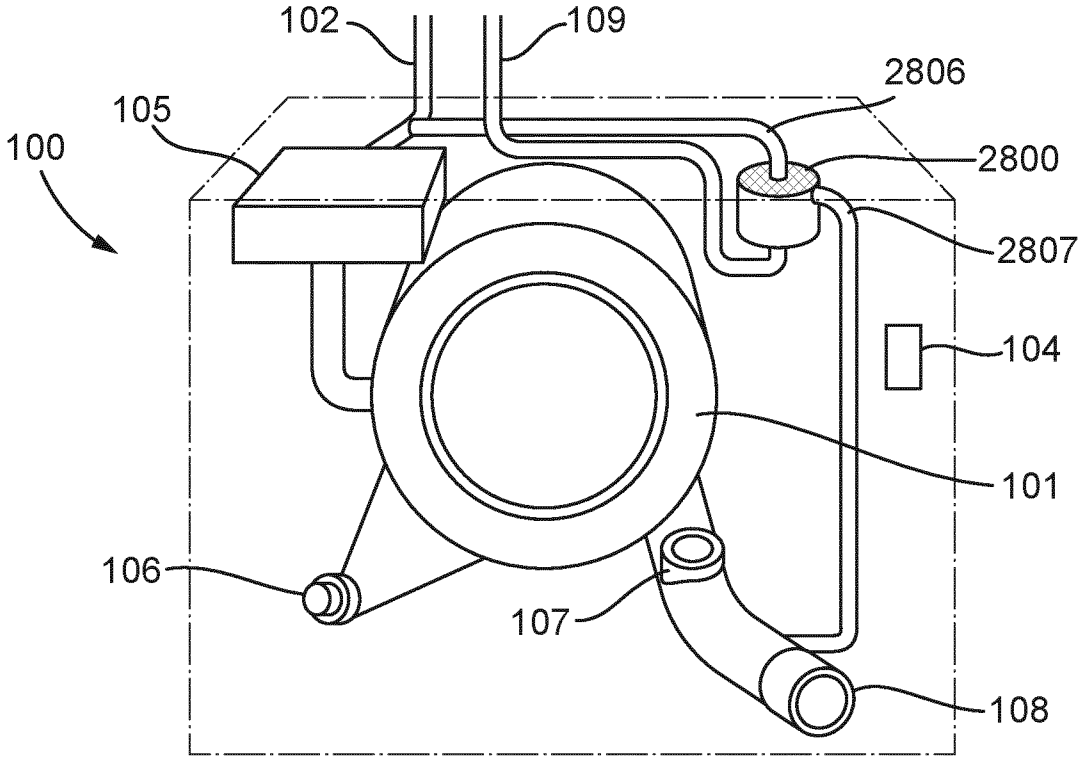

Fig. 27b

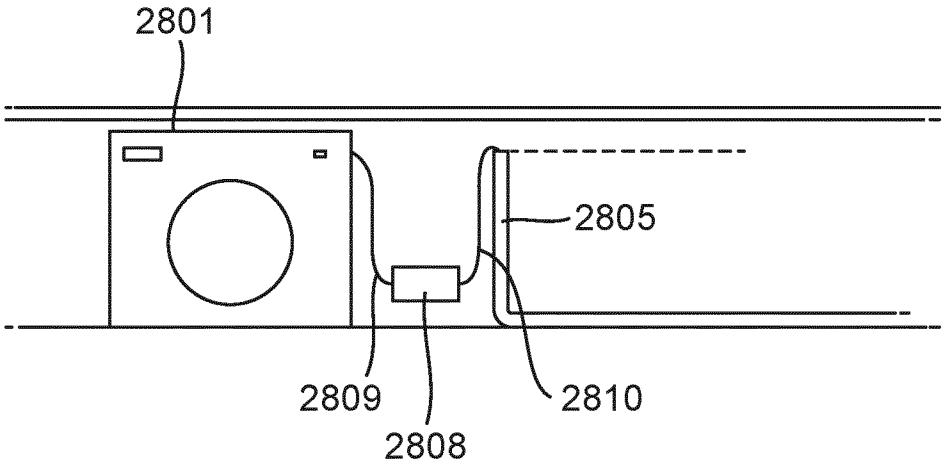

INTERNATIONAL SEARCH REPORT

International application No
PCT/EP2022/061490

A. CLASSIFICATION OF SUBJECT MATTER

INV. B01D29/68
ADD.

According to International Patent Classification (IPC) or to both national classification and IPC

B. FIELDS SEARCHED

Minimum documentation searched (classification system followed by classification symbols)

B01D

Documentation searched other than minimum documentation to the extent that such documents are included in the fields searched

Electronic data base consulted during the international search (name of data base and, where practicable, search terms used)

EPO-Internal, WPI Data

C. DOCUMENTS CONSIDERED TO BE RELEVANT

Category*	Citation of document, with indication, where appropriate, of the relevant passages	Relevant to claim No.
X	US 2004/094470 A1 (JACKSON NICHOLAS [GB]) 20 May 2004 (2004-05-20) figure 13b	1-23
A	US 2017/072343 A1 (CAO XUELIANG [US] ET AL) 16 March 2017 (2017-03-16) figure 4	1-23
A	US 6 267 879 B1 (GIL SHEMUEL [IL]) 31 July 2001 (2001-07-31) figure 1	1-23
A	US 5 268 095 A (BARZUZA YTZHAK [IL]) 7 December 1993 (1993-12-07) figure 3	1-23

☐ Further documents are listed in the continuation of Box C.

☒ See patent family annex.

* Special categories of cited documents :

"A" document defining the general state of the art which is not considered to be of particular relevance

"E" earlier application or patent but published on or after the international filing date

"L" document which may throw doubts on priority claim(s) or which is cited to establish the publication date of another citation or other special reason (as specified)

"O" document referring to an oral disclosure, use, exhibition or other means

"P" document published prior to the international filing date but later than the priority date claimed

"T" later document published after the international filing date or priority date and not in conflict with the application but cited to understand the principle or theory underlying the invention

"X" document of particular relevance;; the claimed invention cannot be considered novel or cannot be considered to involve an inventive step when the document is taken alone

"Y" document of particular relevance;; the claimed invention cannot be considered to involve an inventive step when the document is combined with one or more other such documents, such combination being obvious to a person skilled in the art

"&" document member of the same patent family

Date of the actual completion of the international search	Date of mailing of the international search report
29 July 2022	08/08/2022

Name and mailing address of the ISA/	Authorized officer
European Patent Office, P.B. 5818 Patentlaan 2 NL - 2280 HV Rijswijk Tel. (+31-70) 340-2040, Fax: (+31-70) 340-3016	Skowronski, Maik

INTERNATIONAL SEARCH REPORT

Information on patent family members

International application No
PCT/EP2022/061490

Patent document cited in search report	Publication date	Patent family member(s)	Publication date
US 2004094470 A1	20-05-2004	CA 2434358 A1	25-07-2002
		CN 1486210 A	31-03-2004
		EP 1361913 A1	19-11-2003
		EP 1363717 A1	26-11-2003
		JP 2004523345 A	05-08-2004
		TW 592781 B	21-06-2004
		TW I239258 B	11-09-2005
		US 2004094470 A1	20-05-2004
		US 2004112846 A1	17-06-2004
		WO 02056995 A1	25-07-2002
		WO 02056996 A1	25-07-2002
US 2017072343 A1	16-03-2017	CN 108348824 A	31-07-2018
		US 2017072343 A1	16-03-2017
		WO 2017045394 A1	23-03-2017
US 6267879 B1	31-07-2001	AT 243058 T	15-07-2003
		AU 768447 B2	11-12-2003
		EP 1204448 A1	15-05-2002
		ES 2200901 T3	16-03-2004
		IL 147998 A	31-08-2004
		US 6267879 B1	31-07-2001
		WO 0112293 A1	22-02-2001
US 5268095 A	07-12-1993	AR 245612 A1	28-02-1994
		AT 163563 T	15-03-1998
		AU 635137 B2	11-03-1993
		BG 61028 B1	30-09-1996
		BR 9102532 A	21-01-1992
		CA 2043474 A1	07-12-1991
		DE 69128983 T2	18-06-1998
		EP 0460842 A1	11-12-1991
		FI 912701 A	07-12-1991
		IE 911858 A1	18-12-1991
		IL 94630 A	18-08-1993
		JP H0647209 A	22-02-1994
		KR 920000357 A	29-01-1992
		LV 11108 B	20-08-1996
		MD 1322 B2	30-09-1999
		NO 179128 B	06-05-1996
		NZ 238291 A	28-04-1993
		PL 290570 A1	16-12-1991
		PT 97872 A	30-06-1993
		RO 113119 B1	30-04-1998
		TR 26638 A	15-03-1995
		US 5268095 A	07-12-1993
		YU 99791 A	10-05-1994
		ZA 914096 B	25-03-1992